TRANSLATING THE BIBLE

A Critical Analysis of E.A. NIDA'S Theory of Dynamic Equivalence and its Impact Upon Recent Bible Translations.

BY

ANTHONY HOWARD NICHOLS
BA, M.Ed (Sydney) BD Hons (London), Th Schol (ACT)
MA Hons (Macquarie)

A Thesis submitted to the Department of Biblical Studies of the University of Sheffield, in partial fulfilment of the requirements for the degree of Doctor of Philosophy.

November 1996.

TRANSLATING THE BIBLE

by ANTHONY HOWARD NICHOLS

SUMMARY

Developments in translation theory have externalized processes used intuitively by translators for centuries. The literature on Bible translation in particular is dominated by Eugene A. Nida and his proteges whose work is informed by a wealth of intercultural experience.

This thesis is a critique of the Dynamic Equivalence (DE) theory of translation propounded by Nida, exemplified in the Good News Bible, and promoted in non-Western languages by the United Bible Societies. Section I of the thesis surveys the history of translation, its theory and problems, and describes relevant developments in linguistics. Section II examines Nida's sociolinguistic model and his methods of grammatical and semantic analysis, transfer and restructuring. Section III focuses on the translation of seven texts representing different Bible genres into Septuagint Greek, English and Indonesian versions, noting the distinctive features of DE translations. Section IV takes up and examines key issues that have arisen: the nature of Biblical language, the handling of important Biblical motifs and technical terminology, and the implications of naturalness and explicitness in translation.

Nida has provided excellent discussion on most translation problems, as well as useful tools for semantic analysis. However, the DE model is found to be defective for Bible translation. Firstly, it underestimates the intricate relationship of form and meaning in language. Secondly, while evaluation of translation must take account of its purpose and intended audience, 'equivalence' defined in terms of the receptor's reactions is impossible to measure, and blurs the distinction between 'translation' and 'communication'. Thirdly, the determinative role given to receptor response constantly jeopardizes the historical and cultural 'otherness' of the Biblical text. Finally the drive for explicitness guarantees that indigenous receptors must approach Scripture through a Western grid and denies them direct access to the Biblical universe of discourse.

TABLE OF CONTENTS

SUMMARY ii

TABLE OF CONTENTS iii

ACKNOWLEDGEMENTS vi

ABBREVIATIONS vii

I General Abbreviations vii

II Bible Versions viii

III Biblical Books ix

CHAPTER ONE — INTRODUCTION: THE BACKGROUND, PURPOSE AND SCOPE OF THE THESIS 1

I Bible Translation And Linguistics

CHAPTER TWO — AN HISTORICAL OVERVIEW OF TRANSLATION AND TRANSLATION THEORY 7

A. The Pre-Linguistic Period 7

B. Translation And Developments In Linguistics 9

CHAPTER THREE — PROBLEMS IN TRANSLATION 12

A. Problems Arising From Cultural Differences 17

B. Problems Arising From Lexical Differences 19

C. Problems Arising From Grammatical Differences 23

CHAPTER FOUR — SACRED TEXTS AND TRANSLATION THEORY 27

A. Sacred Texts And Translation 27

B. Linguistic Theory 30

C. Linguistic Theory And Bible Translation 34

II The Dynamic Equivalence Theory Of Eugene A. Nida

CHAPTER FIVE — AN ORIENTATION TO NIDA'S SOCIO-LINGUISTIC THEORY OF TRANSLATION 37

A. The Background 37

B. The New Concept Of Translation 40

C. Some Issues 52

CHAPTER SIX — NIDA'S GRAMMATICAL ANALYSIS 56

A. The Processes Of Grammatical Analysis 56

B. Some Issues 62

CHAPTER SEVEN SEMANTIC ANALYSIS....64
A. Processes Of Semantic Analysis....64
B. Some Issues....70
CHAPTER EIGHT TRANSFER AND RESTRUCTURING....75
A. Significant Factors In Transfer....75
B. Significant Factors In Restructuring (TAPOT Chapter 7)....78
C. Some Issues—Form And Meaning....83

III DE Theory Incarnate—The Good News Bible

CHAPTER NINE BACKGROUND—THE BIBLE IN ENGLISH....87
CHAPTER TEN THE GOOD NEWS BIBLE—ITS BACKGROUND, PURPOSE AND NATURE....98
CHAPTER ELEVEN DYNAMIC EQUIVALENCE TRANSLATIONS EXAMINED....108
Text 1 Genesis 1:1-8....112
Text 2 2 Samuel 7: 1-17....121
Text 3 Psalm 1....137
Text 4 Zechariah 2:6-13 (Hebrew and LXX 2:10-17)....143
Text 5 Mark 1:1-15....152
Text 6 Romans 3:21-26....173
Text 7 Revelation 20....187
Conclusion....206

IV Some Issues Arising From The Implementation Of DE Theory

CHAPTER TWELVE THE LANGUAGE OF THE BIBLE AND NATURAL COMMON LANGUAGE....211
A. Language Varieties And The Demand For Naturalness....211
B. The Appeal To NT Koine As A Model For Contemporary Bible Translators....213
C. The Role Of The Greek Septuagint Translation....221
D. Conclusion....228
CHAPTER THIRTEEN CONCORDANCE AND TECHNICAL TERMINOLOGY IN DE TRANSLATIONS....232
A. Biblical Word Studies And Modern Semantics....232
B. Concordance In Translation....238
C. A Case Study: The Translation Of Sacrificial Terminology In The NT....241
D. Conclusion....255

CHAPTER FOURTEEN PRESERVING CULTURAL AND HISTORICAL DISTANCE—INCLUSIVE LANGUAGE AND 'ISRAEL' IN RECENT VERSIONS 258
A. Introduction 258
B. Inclusive Language 259
C. The Fate Of 'Israel' In Recent Versions 265
D. Conclusion 276
CHAPTER FIFTEEN EXPLICITNESS AND THE WESTERNIZATION OF SCRIPTURE 277
A. Implicit Information In The Source Text 277
B. The Problem—Form And Meaning 282
C. Figures Of Speech 285
D. Metaphor And Its Translation 287
E. Conclusion 290
CHAPTER SIXTEEN CONCLUSION 291
Section 1 291
Section II 292
Section III 295
Section IV 298
Post Script For Postconstructionists 302
BIBLIOGRAPHY 304

ACKNOWLEDGEMENTS

Thanks are due to many people who have assisted me in this study. Firstly I express my gratitude to successive groups of colleagues and students in North Borneo, Indonesia, and the Northern Territory, and to the Church Missionary Society of Australia, who enabled me to get first hand experience of both the enrichment and the problems caused by cultural and linguistic diversity.

It seems a long time ago now, but I would like to thank a small group of scholars who responded to a brief paper I wrote in the late 1970s while serving at Satya Wacana Christian University, Salatiga, Central Java. First and foremost Dr Eugene Nida himself graciously responded promptly and pertinently from the American Bible Society in New York. Valuable criticism also followed from the late Dr John Callow of Buxton, Derbyshire, Dr Paul Ellingworth and Professor Howard Marshall both of Aberdeen, Scotland, Dr Daniel Arichea of the Indonesian Bible Society, and Dr Aryeh Newman of the Hebrew University of Jerusalem.

Professor Colin Yallop of the Macquarie University School of Linguistics persuaded me to expose my thinking to more rigorous discipline in Semantics and Text Linguistics during our 1979 furlough. He was a great encouragement in the research for my subsequent MA Honours thesis. In the area of Bible interpretation I acknowledge my debt to my former teacher, Archbishop D.W.B. Robinson, one time Vice Principal of Moore Theological College, Sydney.

I would like to express by gratitude to my Supervisor, Professor John Rogerson and Mrs Rosalind Rogerson who made the Nichols family so welcome in Sheffield in 1985/86, and likewise to the faculty and post graduate students at the time. I hope that Dr Rogerson will not be too disappointed with the way I have developed the ideas which he once thought promising. The final version of the thesis has benefited greatly from the detailed comment of Mr N.J.C. Gotteri and Professor S.E. Porter.

The demanding and itinerant nature of my present ministry in the world's largest Anglican diocese plus my own inbuilt resistance to modern technology, did not augur well for the completion of this thesis. It is with heartfelt thanks therefore that I acknowledge my debt to Alison and Graham McKay and Allan Chapple of Perth, friends indeed who took me in hand and provided the needed 'production assistance'.

Most of all, I wish to say thankyou to Judith, my γνήσιος σύνζυγος, without whose support, criticism and encouragement, I could never have begun, continued or completed this undertaking.

ABBREVIATIONS

I: General Abbreviations

ABR	Australian Biblical Review
AUSS	Andrews University Seminary Studies
BAGD	BAUER, W., ARNDT, W.F., GINGRICH, F.W., and DANKER, F.W., *A Greek-English Lexicon of the New Testament and Other Early Christian Literature*, 2nd English ed., Chicago: University of Chicago Press, 1979.
BAR	Biblical Archaeology Review
Bib	Biblica
CBQ	Catholic Biblical Quarterly
DE	Dynamic Equivalence
DNTT	*New International Dictionary of New Testament Theology*, 3 vols., Colin Brown, ed., Exeter: Paternoster, 1975-8.
ETR	Etudes théologiques et religieuses
ExpT	Expository Times
FC	formal correspondence
HBD	Hastings Dictionary of the Bible
HSM	Harvard Semitic Monographs
ICC	International Critical Commentary
IDB	Interpreters Dictionary of the Bible
IRM	International Review of Mission
JBL	Journal of Biblical Literature
JSNT	Journal for the Study of the New Testament
JSOT	Journal for the Study of the Old Testament
NBD	*New Bible Dictionary*, 2nd ed., J.D. Douglas, ed., London: InterVarsity Press, 1972.
NCB	New Century Bible
NIB	*New Interpreter's Bible: A Commentary in 12 Volumes*, L.E. Keck, ed., Nashville: Abingdon, 1994-
NICNT	New International Commentary on the New Testament
NIGTC	New International Greek Testament Commentary
NOT	Notes on Translation
NovT	Novum Testamentum
NovTSup	Supplement Series to Novum Testamentum

NT	New Testament
NTS	New Testament Studies
OT	Old Testament
R&E	Review and Expositor
RL	Receptor Language
RTR	Reformed Theological Review
SBLDS	Society of Biblical Literature Dissertation Series
SBT	Studies in Biblical Theology
SJT	Scottish Journal of Theology
SIL	Summer Institute of Linguistics/Wycliffe Bible Translators
SL	source language
SNTSMS	Society for New Testament Series Monograph Series
ST	source text
TAPOT	*The Theory and Practice of Translation* (Helps for Translators, No. 8, Leiden: EJ.Brill, 1969)
TB	Tyndale Bulletin
TBT	The Bible Translator
TEV	*Today's English Version*, former name of the *Good News Bible* (New York: American Bible Society)
TNT	Translators New Testament
UBS	United Bible Societies, The
VT	Vetus Testamentum
WBC	Word Biblical Commentary
WTJ	Westminster Theological Journal

II Bible Versions

ASV	American Standard Version
BIS	Today's Indonesian Version
DGN	Die Gute Nachricht
ERV	English Revised Version
GNB	Good News Bible
JBP	J.B. Phillips
JB	Jerusalem Bible
KJV	Authorised Version
LB	Living Bible
LXX	Septuagint
NJB	New Jerusalem Bible

NEB	New English Bible
NRSV	New Revised Standard Version
REB	Revised English Version
TB	Indonesian New Translation (1976)
TCV	Today's Chinese Version
TEV	Today's English Version, now Good News Bible
TL	Indonesian Old Translation (1879)
TMV	Today's Malay Version

III Biblical Books

Books of the Old Testament

Gen	Genesis	Ct	The Song of Solomon
Ex	Exodus	Isa	Isaiah
Lev	Leviticus	Jer	Jeremiah
Num	Numbers	Lam	Lamentations
Deut	Deuteronomy	Ezek	Ezekiel
Josh	Joshua	Dan	Daniel
Judg	Judges	Hos	Hosea
Ruth	Ruth	Joel	Joel
1-2 Sam	1-2 Samuel	Amos	Amos
1-2 Kgs	1-2 Kings	Obad	Obadiah
1-2 Chr	1-2 Chronicles	Jonah	Jonah
Ezra	Ezra	Mic	Micah
Neh	Nehemiah	Nah	Nahum
Esth	Esther	Hab	Habakkuk
Job	Job	Zeph	Zephaniah
Ps (pl: Pss)	Psalms	Hag	Haggai
Prov	Proverbs	Zech	Zechariah
Eccl	Ecclesiastes	Mal	Malachi

Books of the New Testament

Matt	Matthew	Col	Colossians
Mark	Mark	1-2 Thess	1-2 Thessalonians
Luke	Luke	1-2 Tim	1-2 Timothy
John	John	Titus	Titus
Acts	The Acts of the Apostles	Phlm	Philemon

Rom	Romans	Jas	James
1-2 Cor	1-2 Corinthians	1-2 Pet	1-2 Peter
Gal	Galatians	1-2-3 John	1-2-3 John
Eph	Ephesians	Jude	Jude
Phil	Philippians	Rev	The Revelation

Some Deuterocanonical Books/Apocrypha

Sir	Sirach (Ecclesiasticus)
1-2-3-4 Macc	1-2-3-4 Maccabees
1-2 Esdr	1-2 Esdras
Man	Prayer of Manasseh

CHAPTER ONE

INTRODUCTION: THE BACKGROUND, PURPOSE AND SCOPE OF THE THESIS.

This study had its genesis in Indonesia in the late 1970s. I had been asked to provide a Biblical 'minor' in a new post-graduate Sociology of Religion programme at the Christian University in Salatiga, Central Java, where we served for nine years. Contextualization ('Pembribumian') was in vogue, and the Indonesian theological students were being encouraged to utilize the insights of anthropology to help the growing Indonesian churches shed western accretions and become truly indigenous. 'Water-buffalo theology' was in the air, and patterns of worship, church organization and architecture were a natural target for review, in the light of what was deemed culturally appropriate.

Accordingly, in the Biblical minor we sought to supplement the cultural studies, by reflection on the scripture material on worship, looking in particular at the use of Old Testament cultic language in the New Testament. Few of the students were strong in Hebrew or Greek, so we used the newly launched Indonesian translation of the NT, *Kabar Baik Masa Kini* (1977). The publication of the whole Bible was to follow in 1985, a project in which the Roman Catholic Biblical Institute cooperated with the United Bible Societies (UBS) in providing this new version for Indonesia's twenty million Christians.

However, the new version proved a frustrating basis for our seminars on the use of cultic language in the NT. On the one hand, where the source text used such terminology, the new version often replaced it with an explanatory paraphrase. On the other hand, the new version often interpolated sacral language where there was none in the original text. For example, it explained what kind of assembly Paul is referring to in 1 Corinthians by regularly inserting the word 'ibadah' ('worship'), e.g. in 1 Cor 11:4, 11:5, 11:13, 11:16, 11:17, 14:19, 14:26. Since Paul's writings never apply the cultic language of the Temple to the Christian assembly, this seemed a significant distortion of his teaching.

Subsequently the UBS Translations Consultant explained to me that what I had observed in the new Indonesian translation reflected the 'Dynamic Equivalence' principles that were being promoted and implemented worldwide through the

translation programmes of both the UBS and the Wycliffe Bible Translators. The emphasis on 'natural' language in translation reflected the insights of Eugene A. Nida's sociolinguistic model with its concern for successful communication. The Dynamic Equivalence (DE) theory of translation was being disseminated by the indefatigable Nida and his proteges through the excellent international journal *The Bible Translator*, through well produced Manuals and *Helps for Translators*, as well as through practical workshops and the Summer Institute of Linguistics.

Clearly, then, one was confronted by a significant new trend in Bible translation. For whatever statements have been made by great Bible translators of the past (e.g. Luther and Tyndale) about the need for flexibility and naturalness, the prevailing approach had focused on the meaning of the original rather than the capacities of the intended receptors. This was possibly because in Christianity, unlike Judaism or Islam, the version functions as an authoritative replacement of the original, and not merely as an aid to understanding. Thus the English Authorised Version (1611) was not written in the natural, everyday English one might have expected on the basis of some of the statements in its 'Preface to the Reader'. Rather, it reproduced Semitic idioms and many of the formal features of the original. More especially, whatever flexibility the translators did show, they were diligent in reproducing key imagery and important verbal concordances from the source text (ST).

This thesis sets out to examine the Dynamic Equivalence theory of translation so influentially propounded by Eugene A. Nida, exemplified in the Good News Bible, and promoted in non-western languages such as Bahasa Indonesia, by the United Bible Societies and the Wycliffe Bible Translators.

Nida has written over thirty books and more than a hundred journal articles. However, he has stated that *The Theory and Practice of Translation* (1969), which he co-authored with Charles R. ~~Taylor~~ Taber, represents the best summary of his Dynamic Equivalence theory[1]. TAPOT, as it is commonly designated, will thus provide the main basis for our examination of DE theory.

In fairness to Nida, however, we must acknowledge that his thought has not remained static. Even in retirement, his writings continue to interact with recent developments in Linguistics that are very different from the Bloomfieldian structuralism which provided the original matrix for his thought. Thus *From One Language to Another* (1986), which he co-authored with Jan de Waard, explores the implications of rhetoric for translation. The same work also foreshadows the study of lexical meaning in terms of

---

1 E.A. Nida, *Language Structure and Translation* (Stanford: Stanford University Press, 1975) 222.

domain structures - an approach that finds its fulfilment in the *Greek-English Lexicon* (1988) and *Lexical Semantics of the Greek New Testament* (1992), both co-authored with J.P. Louw. These imply a further refinement of DE Theory, and will prove valuable aids to Bible translators. They do not, however, come within the scope of this thesis.

The purview of this thesis is limited to those works of Nida that foreshadowed or expounded Dynamic Equivalence theory prior to the publication of the *Good News Bible* and its foreign language counterparts, especially the Indonesian *Alkitab Kabar Baik*.

In other words, our cut-off point is 1985, by which time DE versions, or at least New Testaments, had appeared in most major European languages as well as a number of non-Western languages - some of which are referred to in this thesis.

Furthermore from 1984, Nida and his colleagues begin to speak of 'functional equivalence' rather than 'dynamic equivalence'. *From One Language to Another* (1986) is described as a treatment of 'Functional Equivalence in Bible Translation' and we read that it follows seven years reflection on 'new developments in translating, particularly in view of some important insights from sociosemiotics'. Nevertheless, they maintain 'the substitution of 'functional equivalence' is not designed to suggest anything essentially different from what was earlier designated by the phrase "dynamic equivalence".' 'Unfortunately', they continue, 'the expression "dynamic equivalence" has been misunderstood as referring to anything which might have special impact and appeal for receptors. Some Bible translators have seriously violated the principle of dynamic equivalence as described in *Theory and Practice of Translation* and *Toward a Science of Translating*.'[2] In a subsequent, revised edition of *Message and Mission* (1990), Nida uses 'dynamic' and 'functional' equivalence interchangeably, though his concept of equivalence now begins with '1. stylistics, which includes the formal structural relationships'.[3]

Section I of the thesis provides a context for our investigation. It surveys the history of translation, its theory and problems, giving attention to those developments which provide the background to the emergence of Nida's Dynamic Equivalence theory. It then gives a brief overview of the predominantly structural linguistics of the mid-twentieth century.

---

2 E.A.Nida and J. de Waard, *From One Language to Another* (Nashville: Thomas Nelson, 1986) vii.

3 E.A. Nida, *Message and Mission: The Communication of the Christian Faith* (Pasadena: William Carey Library, 1990; original edition Harper and Row 1960) 140-155.

Section II considers the DE theory itself: that is, Nida's sociolinguistic model and the methods of grammatical and semantic analysis, transfer and restructuring, as described primarily in his *Theory and Practice of Translation*. Since the intention of this thesis is to provide a critical evaluation of the DE theory, the question now arises as to how this is best done.

It is obviously not possible within the confines of this thesis to undertake a comprehensive or exhaustive analysis of the way DE theory has been used in the production of modern Bible translations. Our approach has therefore been to take 'soundings' in several key areas. These have been chosen so as to test DE theory with respect to the claims made as to its principal characteristics and benefits.

Section III takes up the question of how DE theory actually works in practice—what characterises a DE translation of the Bible? We begin by surveying briefly the history of English translations of the Bible (Chapter Nine). This provides the background for a general examination of the *Good News Bible* , the first deliberate embodiment of DE theory in Bible translation (Chapter Ten). We then test the results of DE theory by taking 'soundings' in the biblical text. We have done this by selecting 7 passages, each representing a significant Bible genre, and comparing the way FC and DE translations deal with the ST in each case (Chapter Eleven). Here we consider, not only the GNB, but also some non-Western translations, some of which precede DE theory, and some of which reflect it.

In Section IV we take a different set of 'soundings', which concern the way modern DE translations have handled some crucial issues that confront all Bible translators. These are not issues chosen at random, but arise directly out of Chapter Eleven's examination of DE theory.

Chapter Twelve takes up the question of 'natural common language'.

Chapter Thirteen explores the issue of 'concordance' and technical terminology. The case study we provide here is the translation of some of the OT's sacrifical terminology. This is an obvious area to test, because of the way this language, and the world-view it reflects, is so foreign to the receptors of the GNB.

Chapter Fourteen deals with the issue of 'distance'—should the historical and cultural distance between ST and receptor be preserved, minimised, or eliminated? The two brief case studies provided here are the use of 'inclusive language' and the translation of the Bible's 'Israel' vocabulary.

Finally, Chapter Fifteen takes up the question of 'explicitness' in the translation of poetry and metaphor.

The Conclusion summarises our investigation of Nida's Dynamic Equivalence theory and the findings with regard to its impact on recent Bible translations. It also suggests what issues have to be addressed in any alternative translation approach.

I Bible Translation And Linguistics

CHAPTER TWO

AN HISTORICAL OVERVIEW OF TRANSLATION AND TRANSLATION THEORY

A. THE PRE-LINGUISTIC PERIOD

Translation theory as such has received scant attention until recently, particularly if one considers the vast amount of human energy that has been expended on inter-lingual communication over the centuries. Historically, in the West, translation activity assumed significant dimensions in the third century BC when the Romans took over wholesale many elements of Greek culture. Writers such as Livius Andronicus, Quintilian, Cicero, Horace, Catullus and the younger Pliny rendered the Greek classics with great skill. The early centuries of the Christian era, too, saw much translation in Syriac, Latin, Coptic dialects, Ethiopic, Gothic, Georgian and Armenian to meet the needs of the rapidly expanding Christian community. In the twelfth century the West came into contact with Islam in Moorish Spain. The situation favoured the two necessary conditions for large scale translation: a qualitative difference in culture and continuous contact between the two languages.[4] Toledo in Spain became a centre of learning. Greek classics were translated into Latin though generally via intermediate languages such as Syriac and Arabic.

The rediscovery of the ancient world that marked the fifteenth century Renaissance saw translations being produced for a broader constituency than ecclesiastically trained academics. Political and social factors increasing the importance of vernacular languages prepared the way for the contribution of the Reformation. Martin Luther's translation of the Bible in 1531 is said to have laid the foundation of modern German.[5] Luther's success encouraged similar enterprises in other European languages, including that of William Tyndale whose work was substantially reflected in the English Bible authorized by King James I in 1611. This in turn had a profound influence on English language and literature.[6]

---

4 P. Newmark, 'The Theory and Craft of Translation', *Language Teaching and Linguistic Abstracts* 9:1(1976) 5.

5 E.H. Harbison, *The Christian Scholar in the Age of the Reformation* (Grand Rapids: Eerdmans, 1983) 127.

6 J. Drinkwater, *The Outline of Literature* (London: George Newnes, 1950) 70; J. Hollander and F. Kermode, *The Oxford Anthology of English Literature* (London: Oxford University Press, 1973) 528.

However, it is the twentieth century which has witnessed the greater explosion of translation activity. It is estimated that over 100,000 persons dedicate most of their time to such work.[7] The European Economic Community alone employs 1,300 translators. In the nineteenth century translation had been the preserve of men of letters and science, and international trade was conducted in the language of the dominant power, whilst diplomacy was in French. Now however, international agreements are translated for all the interested parties, and the establishment of an international body, multinational company or newly independent state all give translation enhanced significance, not to mention factors such as the simultaneous publication of the same book in various languages and the exponential increase in technology (patents, specifications, documentation).

Yet in relation to the volume of translational activity, little has been written about it. Traditionally the discussion has centred on two broad issues:

a. the conflict between free and literal translation
b. the tension between the inherent impossibility and absolute necessity.

The classic treatments are those of St Jerome (400 AD), Luther (1530), Etienne Dolet (1540), Dryden (1680), Tytler (1790)—all favouring an idiomatic approach. Tytler, a Scot, wrote an influential volume on *The Principles of Translation* which stated that:

> a good translation is one in which the merit of the original work is so completely transfused into another language as to be distinctly apprehended and as strongly felt by a native of the country to which the language belongs as it is by those who speak the language of the original work.[8]

Attitudes to translation in the nineteenth century saw a new emphasis on technical accuracy verging on pedantry. In England more literal tendencies in translation were exemplified in Matthew Arnold's reproduction of Homer in English hexameter, an attempt to adhere to the form of the original. The long awaited revision of the English Bible, the Revised Version of 1881, and its counterpart, the American Standard Version of 1901, displayed such wooden literalism that they completely failed to oust the King James Version from popular affections. Like Matthew Arnold's Homer the ERV and the ASV gained acceptance only amongst the scholarly elite who could appreciate the translation because of their familiarity with the original languages. German writers such as Goethe, Schleiermacher (1813), von Humboldt (1836),

---

7 E. Nida, *The Theory and Practice of Translation* (Helps for Translators VII; Leiden: Brill, 1969) 1.

8 P. Newmark, 'The Theory and Craft of Translation', *Language Teaching and Linguistic Abstracts* 9:1(1976) 6. E. Nida, *Toward a Science of Translating with Special Reference to Principles and Procedures Involved in Bible Translating* (Leiden: Brill, 1964).

Schopenhauer (1851) and Nietzsche (1882) also favoured more literal translation methods. Von Humboldt in particular espoused a kind of cultural determinism to be associated a century later with the ideas of Benjamin Whorf—a view of language which regarded translation as an impossible task.

B. TRANSLATION AND DEVELOPMENTS IN LINGUISTICS

Translation is inevitably an interdisciplinary study. It would be pretentious to attempt more than fleeting references. For instance some knowledge of *Textual Criticism* enables the translator to assess the quality of the text before he sets out to interpret it, while some reading in *Stylistics*[9] will help in the handling of literary texts where more attention must be paid to connotation and emotion. Modern *Philosophy*, too, has focused on certain issues of interest to translators, particularly those bearing on the grammatical and lexical aspects of translation. Thus Wittgenstein's oft-quoted remark that 'the meaning of a word is its use in the language'[10] emphasises the importance of contextual use. Likewise Austin's distinction between descriptive and performative sentences[11] underlined the contrast between non-standardised and standardised language which is significant for the translator. *Anthropologists*, such as Malinowsky, have drawn attention to the cultural context of linguistic utterances[12] so important subsequently for the British linguists J. R. Firth and M. A. K. Halliday. *Psychologists* also have provided insights of special interest to translators. For instance, Vygotsky's research in the 1930s on the relationship of language and thought had implications for behaviouristic views, while the work of Osgood, Suci and Tannenbaum[13] stimulated attempts to perfect techniques for measuring connotative meanings of terms based on people's responses to them.

Computer Science made possible the development of machine translation, the results of which, while not justifying the enthusiasm generated in the 50s (except in the case of materials of a restricted technical nature), nevertheless brought a number of not insubstantial benefits to translation theory. Teaching computers to translate demanded a degree of descriptive rigour not required in the past. Furthermore their failure in the area of intersentence structure promoted Discourse Analysis and study of Cohesion.

---

9 R. Jakobson, 'Closing statement; linguistics and poetics', *Style in Language* (T.A. Sebeok ed.; Cambridge MA: MIT, 1960) 350-377

10 L. Wittgenstein *Philosophical Investigations* (Oxford: Blackwell, 1953)

11 J. Austin, *How to Do Things with Words* (Oxford: Clarendon Press, 1962).

12 B. Malinowsky 'The problem of meaning in primitive languages' *The Meaning of Meaning* (8th edition, Supplement I; C.K. Ogden and I.A. Richards; London: Routledge, 1935).

13 C.E. Osgood, G.J. Suci and P.H. Tannenbaum, *The Measurement of Meaning* (2nd edition; Urbana: University of Illinois, 1967)

The problems of polysemy were also highlighted by machine translation. Human translators are able to move from one area of meaning to another by means of analogical extension. But it was a tall order to expect a computer to make accurate choices based on certain diagnostic features. *Communication Theory*, of which information theory is an integral part, has provided important new concepts for translators: thus the channel capacity of the decoders of the message becomes a factor in any assessment of the adequacy of a translation, and a good deal of redundancy is built into the message where a relatively low channel capacity is posited. The focus of information theory on feedback has also encouraged more attention to the response of the receptors. All of these disciplines have made their contribution. Nevertheless Translation Theory remains essentially the province of *Comparative Linguistics* and in particular, *Semantics*. As an application of linguistics, translation theory attempts to provide a reference for the principles, rules and procedures which the translator uses.

Prior to 1945 translation might be regarded as almost exclusively the domain of *Philology*. In fact, even since the War most publications on translation have been philological rather than linguistic in orientation. This is reflected in the volume edited by Brower[14] and the general standpoint of *Babel*, the Journal of the International Federation of Translators. Federov's 1958 *Introduction to a Theory of Translation* contained a much more comprehensive treatment of translation problems which sought to utilise sound linguistic principles and methods. Falling between philology and linguistics Federov failed to satisfy either party but his book has been influential, not only in Russia but in Europe and America too.[15] Of the literature which applies linguistics to translation procedures, Vinay and Darbelnet[16] is notable. They employed translational equivalences between English and French as the basis for analytical treatment of comparative stylistics.

Catford[17] produced a concise and highly technical work in which he applied Halliday's systemic grammar to translation theory and usefully categorised translation shifts between levels, structures, word classes, units and systems. Techniques based on 'rank scale', 'exponency', 'delicacy' and 'rank shifting' are used to compare different translations of a particular source-language text. Useful distinctions are also made between phonological translation, grammatical translation and lexical translation. Other linguists whose views have influenced the practice of translation include de Saussure,

---

14 R. Brower, *On Translation* (Oxford: OUP, 1966))

15 E.A. Nida, 'Translation' *Current Trends in Linguistics Vol. 12* (ed. T. Sebeok; The Hague: Mouton, 1974) 1047

16 J.P. Vinay and J. Darbelnet, *Stylistique* comparée du français et de l'anglais; *méthode de traduction (Paris: Didier, 1958)*

17 J.C. Catford, *A Linguistic Theory of Translation* (London: Oxford University Press, 1965)

Trubetzkoy, Jakobson, Bloomfield, Martinet, Firth, Mounin, Güttinger, Harris and Chomsky.[18]

It remains to mention Eugene Nida whose name dominates the literature of translation and whose Dynamic Equivalence (DE) theory is examined in this thesis. Nida's work is informed by his experience as a linguist and as a Bible translator and just about every translation problem is discussed in his more than thirty books and one hundred journal articles. Much of what he has written on translation theory is best summarised in *The Theory and Practice of Translation*[19] with various aspects of semantic analysis being more fully developed in *Componential Analysis of Meaning*.[20] A striking feature of Nida's writings is the remarkable clarity with which insights concerning language structures and behaviour are communicated. Esoteric symbols are avoided, technical vocabulary kept to a minimum and a variety of illustrative data employed to engage the reader's interest and understanding.

The concern of this thesis is the application of Nida's DE theory to Bible translation, a very special area of translation activity. Nevertheless, the ramifications may well be broader than this particular focus may suggest. After all, Bible translation has a longer tradition—since the third century BC; involves far more languages—2,000 by 1990; is concerned with a far greater variety of cultures; and includes a wider range of literary types, from lyrical poetry to theological discourse, than any comparable kind of translation. Hence it is not unlikely that what is seen to obtain in the translation of the Scriptures will have broad implications for general problems of translation; for semantic analysis; for observations on discourse structures; and cultural transfers.

---

18 E.A. Nida, 'Translation', *Current Trends in Linguistics Vol. 12* (ed. T. Sebeok; The Hague: Mouton, 1974) 1049-50

19 E A. Nida, *The Theory and Practice of Translation* (Helps for Translators Vol.VII; Leiden: Brill, 1969)

20 E.A. Nida, *Componential Analysis of Meaning* (The Hague: Mouton, 1975)

CHAPTER THREE

PROBLEMS IN TRANSLATION

The craft of translation is clearly fraught with many problems and from time to time attempts are made to sever the Gordian knot by proclaiming the dogma of untranslatability or by citing the Italian aphorism *Traduttore traditore,* a rhyming epigram, the English rendering of which only serves to illustrate the point being made (in so far as it is not possible in translation to retain the paronomastic value of the original).

Ideas of cultural and linguistic relativity undoubtedly present the greatest challenge to translation theorists. In seeking to translate a work which belongs to a totally different tradition from our own (such as Mencius, the Gita or the Bible) can we really do more than read our own conception into it? J.R. Firth acknowledged:

> It is not to be supposed that most Orientalists, Egyptologists, classicists, mediaevalists, field anthropologists have not had their wakeful nights over the problem. To put it more precisely can we maintain two systems of thinking in our minds without reciprocal infection and yet in some way mediate between them? And does not such mediation require yet a third system of thought general enough to include them both? And how are we to prevent this third system from being only our own familiar, established tradition of thinking rigged out in some fresh terminology or other disguise.[21]

Historically there seems to be a number of independent sources for the views of cultural and linguistic relativity. In fact the idea that language determines thought is as old as the ancient Greeks, but in modern times was first formulated in a detailed manner by von Humboldt (1836). The legacy of Humboldt and the influence of Weisgerber and Trier have been felt for some time in European linguistics. Weisgerber (1954), for instance, has been particularly insistent on the influence of language structure upon world views and ethnic characteristics, and has claimed an overwhelming influence of the German language upon the German character. In English speaking circles, however, it is the American anthropologists Sapir and Whorf who spring to mind as the main proponents of the view that one's language greatly influences one's thought processes.

---

21 J.R. Firth, *Selected Papers 1952-1959* (ed. F.R. Palmer; London: Longmans, 1968) 78

It has been pointed out by Floyd Lounsbury that the Whorfian hypothesis still proves widely attractive to anthropologists.[22] What is true in anthropology is equally true in biblical studies. Thus T. Boman, in a number of articles and books[23] contended that Israelite thinking is dynamic, vigorous and passionate whereas Greek thinking is static, peaceful, moderate and harmonious. That Hebrew is more dynamic, for instance, is illustrated by the fact that the Hebrew word for 'two' comes from *sanah* meaning 'to repeat'. Likewise the Hebrew word meaning 'to sit' and 'to stand' can be used for 'state' as well as 'motion', thus reflecting the dynamic way of thinking characteristic of the Hebrews. Boman seemed unaware that similar features occur in English, a language closely related to his own. Similarly the Dutch theologian N.H. Ridderbos[24] sees the peculiarly Hebrew sense of corporate personality reflected in the sudden transitions from singular to plural verb form. He does not reflect that similar transitions are common in all West European languages as in: 'A number of boys have forgotten their books' or 'Everybody rises from their seats'.

Responding to the contentions of scholars such as Boman, Gunkel and others, Nida observes:

> The idea that the Hebrew people had a completely different view of time because they had a different verbal system does not stand up under investigation. It would be just as unfounded to claim that people in the English speaking world have lost interest in sex because the gender distinctions in nouns and adjectives have been largely eliminated, or that Indo-Europeans are very time conscious because in many languages there are time distinctions in the verbs. But no people seems more time-oriented than the Japanese, and their verbal system is not too different from the aspectual structure of Hebrew. Furthermore, few people are so little interested in time as some of the tribes of Africa, many of whose languages have far more time distinctions than any Indo-European language has.[25]

Nida stresses the arbitrariness of such grammatical features, following lines laid down by the French structuralist de Saussure. Similar criticisms of biblical word studies based on principles exemplified by Boman, had already been voiced by James Barr in his *Semantics of Biblical Language*.[26]

> With regard to vocabulary stock—when a language possesses a remarkable number of words and expressions for all sorts of details in a particular field, we may safely

---

22 S. Hook ed., *Language and Philosophy* (Ithaca, N.Y.: Cornell University Press, 1963) 10

23 Such as T. Boman *Hebrew Thought Compared with Greek* (London, SCM1960)

24 N.H. Ridderbos, 'Is het Hebreuws ēēn van de bronnen van de openbaring' *Geref. Theol Tijdschrift* (1964) 8.

25 E.A. Nida, 'Implications of Contemporary Linguistics for Biblical Scholarship,' *JBL* 91 (1972) 83.

26 J. Barr, *Semantics of Biblical Language* (Oxford: Oxford University Press, 1961) 46-47, 96-100.

assume that this field is, or once was, important in the language community. The standard illustration of such a cultural focus is Eskimo with its many terms for snow. But examples could be multiplied—Dutch has many words referring to shipping, fishing and agriculture; American Indian languages had many terms for tents and tent parts; Lugisu (Eastern Uganda) has twenty different words for bananas, and Indonesian languages have many different designations for rice.

Such vocabulary concentrations tell us something about the community's present or past way of life. However, we cannot conclude much more from the presence or absence of words. Naturally, when a certain concept is unknown to a people their language will have no word for it. In some Indonesian languages there is no word for snow. But we cannot automatically assume from the absence of a term X that the speakers do not know the concept X. For instance, English, unlike some languages, does not have separate terms to distinguish three kinds of aunts: (1) mother's sister, (2) father's sister, and (3) the wife of an uncle. But this does not mean that English speakers are not able to think such thoughts. Similarly, Indonesian in its words for brother/sister does not differentiate sex but rather older/younger. This certainly does not mean that those who speak only Indonesian can have no concept of 'sister' and 'brother'. It simply means that the idea is expressed by a phrase rather than a word.

The consequence for translation is that the unit of equivalence is not the word. Different languages seldom have more than partial correspondence between words. If a language has no word for an object it does not mean that it cannot talk about the object. Rather it can utilise alternative forms of expression in its own structure for the same end.

What then of Whorf's views? Our problem is to ascertain exactly what is being claimed. He does not deny the conventionality of language but in 'Science and Linguistics' (as a result of his comparative studies of American Indian languages), claims that language is not merely a reproducing instrument for voicing ideas, but rather is itself the shaper of ideas. 'We dissect nature along lines laid down by our own native languages.'[27] Again in his more mystical 'Language, Mind and Reality' he claims that:

> the forms of a person's thought are controlled by inexorable laws of pattern of which he is unconscious...And every language is a vast pattern system, different from others, in which the personality not only communicates but also analyzes nature, notices or neglects types of

---

27 B.L. Whorf, 'Science and Linguistics', *Language Thought and Reality: Selected Papers* (ed. J. B. Carroll; New York, 1956) 212-213

> relationship and phenomes, channels his reasoning, and builds the house of his consciousness.[28]

Max Black has summarized the Sapir-Whorf hypothesis as the claim that 'language, or some aspect of it, partially controls mental life'.[29] He focuses shrewdly on the confusions surrounding the use of the terms 'language', 'mental life' and 'controls'. With regard to unique lexical distinctions in exotic languages he rightly points out that they present only temporary obstacles to understanding. Learning to recognize the names of varieties of snow is no harder than mastering the technical dialect of biology or any other science. As to the much publicized fact that Navahos and others draw their colour boundaries in different places, Black points out that we can readily distinguish many colours for which we may have no distinctive names. However, as we have noted above, Whorf himself stressed the role of grammar in shaping one's *Weltanschauung*. But it is unclear as to what counts as evidence for someone having or lacking a particular concept. The deduction of a world view from the structure of a language always involves circular reasoning. One deduces that people who speak different languages have different mentalities because they speak different languages. Non-linguistic data is seldom adduced. How can one identify the 'thoughts' resulting from certain grammatical features when they are inevitably expressed in words, and in the Whorfian's own language to boot? Is not the metalanguage used by the Whorfian itself inescapably tainted by preconceived metaphysics? Certainly it would be difficult to justify strong determinism. Even to raise these problems proves the falsity of the strongest version of the hypothesis.

A weaker form of determinism is commonly found in writers such as Lenneberg and Bolinger. The latter, for instance, concedes that Whorf's position was exaggerated: Whorf did explain his position in English thus implying that an English reader could grasp the concepts even though they are embodied in the structure of his language. Nevertheless some language categories magnify certain ways of saying things and diminish others. Bolinger draws attention to recent studies (e.g. by Greenfield and Bruner) on how a language organizes concepts into hierarchies:

> By insisting overmuch on grammatical relativism and picking only superficial examples of lexical relativism linguists and anthropologists have perhaps missed the most important cognitive manifestation of all, the intricacy of lexical organization. It is an area that is only beginning to be studied.[30]

---

28 B.L. Whorf, 'Language, Mind and Reality' *Language Thought and Reality: Selected Papers* (ed. J. B. Carroll; New York, 1956) 252

29 M. Black in S. Hook, ed., *Language and Philosophy* (Ithaca, N.Y.: Cornell University Press, 1963) 30

30 D. Bolinger, *Aspects of Language* (New York: Harcourt Brace and World Inc., 1975) 246. cf. J. Lyons, *Introduction to Theoretical Linguistics* (Cambridge University Press,1968) 456-458.

In conclusion then, any thesis of radical untranslatability based on linguistic relativity must be rejected. Naturally the task of translation will not be an easy one where the languages involved represent cultures that are poles apart.

Hockett comments that: (1) the most precisely definable differences between languages are also the most trivial from the Whorfian point of view; (2) languages differ not so much in what can be said in them, but rather as to what it is relatively easy to say; (3) the impact of inherited linguistic patterns on activities is generally least important in the most practical context and most significant in such activities as story telling, religion and philosophizing.[31]

Over the past decade there have been a number of interesting but controversial psycholinguistic studies on the differences between the reasoning processes of Chinese and English speakers. A. H. Bloom[32] conducted experiments which seemed to demonstrate that the absence of a specific grammatical form such as the subjunctive in English made it extremely difficult for Chinese speakers to reason hypothetically. However, Bloom's research material has been criticised by Au and Liu[33] who isolated other variables. The cultural background of those tested, the concrete or abstract nature of the materials used, and the maturity of the subjects all influenced the ability of those tested to reason counterfactually.[34] Future research using more sophisticated measures of cognition may yet provide evidence of the linguistic shaping of thought. For instance will the banning of 'sexist language' in style manuals influence the thinking of those who comply with these standards?

In the meantime with regard to the Whorfian hypothesis it seems reasonable to conclude with Jakobson that: 'Languages differ essentially in what they *must* convey and not in what they *can* convey'.[35]

Translation is a fact and as such presents a challenge both to linguistic theory and to philosophy.

---

31 C.F.Hockett, *The View from Language: Selected Essays 1948-1974*, Athens, GA: University of Georgia Press, 1977, 69.

32 A.H. Bloom, *The Linguistic shaping of Thought: A Study in the Impact of Lanugage on Thinking in China and the West*, (Hillsdale NT: Erlbaum, 1981).

33 T.K. Au, 'Chinese and English counterfactuals: The Sapir-Whorf hypothesis revisited', *Cognition* 15 (1983) 155-187. L.G. Liu, 'Reasoning counterfactually in Chinese: Are there any obstacles?' *Cognition* 21 (1985) 239-270.

34 D.W. Carroll, *Psychology of Language* (Pacific Grove; California: Brooks/Cole, 1994) 383-389.

35 R. Jakobson, 'Language in Relation to other Communication Systems', *Selected Writings*, Vol II, The Hague: Mouton, 1971, 259-70.

Having established the reality of translation one must immediately confess the difficulties facing practitioners. It would be useful in fact to briefly analyse the problems that arise, and to describe the situations in which loss of meaning occurs, when seeking to replace a written message in one language by the same message in another. For the stakes are often high:

> Translation is an imperative activity, you cannot carry on without it. It commands the value of treaties and of commercial contracts and of military capitulations. In a wider field, it is the condition without which a common culture cannot exist.[36]

As to the translation being a 'condition of peace', an obvious contemporary example of crucial import is the conflict in the Middle East that is fuelled by different interpretations of the text of the UN Security Council decision of November 22, 1967. This decision accepted by both sides requested Israel *'Se retirer de territoires'* captured in the Six Day War. Is this to be translated 'withdraw from (some) territories' or 'withdraw from (all) territories'? Both interpretations are possible. Israel has assumed the former while the Arabs have asserted the latter.

The task of translation, then, is a difficult one involving a continuous tension, reflecting the claims of each language involved. A knowledge of linguistics (science) can be a great asset in enabling insight into and analysis of all the factors involved, but the actual achievement of a version as near in all respects as possible to the original is perhaps more in the nature of an art than a science.

Granted that every exercise in translation involves some loss of meaning we turn now to a consideration of the factors involved. We shall focus on those arising from differences in the cultural context, the lexis, and the syntax of the languages involved.

A. PROBLEMS ARISING FROM CULTURAL DIFFERENCES

A text often describes a situation which has elements peculiar to the natural environment, institutions and culture of its language area. Catford offers the Finnish lexical item *sauna* and the Japanese lexical item *huro-ba* as examples of cultural untranslatability.[37] It is conceivable that there might be texts where 'bath' or 'bathhouse' would be an adequate equivalent but the institutions are very different. Whereas the English bath is normally a solitary activity, the Finnish and Japanese baths are communal. The Finnish *sauna* involves neither immersion in hot water nor washing the body. The Japanese institution does involve immersion in hot water, and

---

36 H. Belloc, 'On Translation' (1931) as reprinted in *TBT* 10 (1967): 84

37 J.C. Catford, *A Linguistic Theory of Translation* (London: Oxford University Press, 1965) 99.

washing the body is an integral element of the process, but it is separate from, and completed before, immersion in the bath for soaking. There are many other situational features in both the Finnish and Japanese contexts, the 'source language' (SL) cultures, which do not exist in the English 'target language' (TL) culture. In a similar way, 'bath' is a misleading translation of the Indonesian lexical item *mandi* because of the different physical features and social functions involved. Articles of clothing provide other examples of features of material culture which may lead to difficulties. For instance, no English item is relatable to the Malay-Indonesian *sarung*. No English garment is worn both in bed and in the street (except when there is a fire!).

Most translators would be inclined to transfer the SL item (e.g., *mandi* or *sarung*) into the TL text, leaving its contextual meaning to emerge from the co-text (literary context) or else explaining it in a footnote. Apart from the fact that such semantic borrowing often gives rise to confusion, the translator needs to be aware that the SL lexical item seldom retains its full SL meaning in the TL. Thus the translator who introduces *sauna* into his English text may well know Finnish and assume the full Finnish meaning. For the English reader, however, it carries a contextual meaning something like 'foreign'—specifically Finnish—cultural institution comparable with 'Turkish bath'—and become formalised as a member of lexical sets containing items like steambath, Turkish bath, Public Baths, or even massage parlours.[38] Catford also draws attention to the lexical item *sputnik* which first entered English in October 1957 with the meaning of 'Russian artifical satellite'—no more. But in Russian *sputnik* is a member of a number of lexical sets and its English equivalents would include 'fellow traveller' (traveller, wayfarer, companion, etc.); 'companion' (guide to, handbook, introduction); 'satellite' (planet, earth, moon, etc.); 'artificial satellite' (spaceship, rocket, etc.). We see that the English use of this loan word involves only a partial transference of meaning. *Sputnik* has, in an English text, acquired an English meaning that correlates with only part of the total meaning of the Russian original.

Problems of cultural differences are not limited to lexical items which do not have equivalents in the target language. Let's take an Indonesian text recording the arrival of a visitor (*Pak A*) at the home of *Pak B*.

Pak A: *Permisi.*
Mr A: Excuse me *or* Hello, anyone home?

Anaknya Pak B: *Pak, ada tamu.*
Son of Mr B: Father, there's a guest.

Pak B:` *E, Pak A. Mari Masuk, bagaimana kabarnya? Mari duduk disini.*

---

38 J.C. Catford, *A Linguistic Theory of Translation* (London: Oxford University Press, 1965) 47.

Mr B: Oh, Mr A. Come in. How are you? Sit down here.

Pak A disuguhi minuman oleh pembantunya
Mr A.is served a drink by the servant

Pak B: *Mari diminum*
Mr B: Please drink your drink.[39]

Certain cultural peculiarities make this difficult to translate. For instance, the first line is difficult because in English culture we only call out at the door if we have been knocking for some time and no-one has answered. 'Hello, anyone home?' also suggests an informal attitude which is inconsistent with Mr A being referred to as a 'guest' (a term which in English indicates that formal preparations have been made for his coming). The last line is difficult too, because in English we simply don't say anything about drinking after we have served a visitor, unless perhaps we are concerned because he hasn't touched it for 15 minutes. 'Drink your drink' sounds like an order being given to a small child who is being unco-operative. And yet in Indonesian (especially Javanese) culture it would be unthinkable to drink before being urged to do so by your host. Note too, that in an English version Mr B would have to open the door to Mr A. This is because in English culture the door is normally closed, whereas in Indonesia the door is usually open during 'visiting hours', a concept also foreign to English speakers.

B. PROBLEMS ARISING FROM LEXICAL DIFFERENCES

It was Hjelmslev who likened the relations between the forms of a language and its meanings to that between a fishing net and the dry sand on which it is spread out. One language puts the net this way and includes within one of its meshes a piece of sand that in another language (which puts its net a different way) falls partly or wholly in an adjoining mesh. Every language is ultimately *sui generis*—its categories being defined in terms of relations holding within the language itself.

The task of finding lexical equivalents is easiest when the languages involved fall within the area of relatively unified culture, as in the case of Western European languages. Even so, no two languages have vocabularies which coincide so that every time a word of one languages appears in a text it can be rendered by the same word in the other. Every language has a number of words which just do not exist in other languages. It is said that English has more than a million words while German has

---

39 I owe this example to Mrs Gloria Soepomo from an unpublished paper on 'Problems in Translation' (1977), Salatiga, Indonesia.

about 600 000.[40] Even when we have in two languages words referring to the same extra linguistic phenomenon, we can never be confident that they will be interchangeable in every case. Words do not have one well defined meaning (with the exception of some scientific vocabulary). Rather they cover a range of related, but at times quite dissimilar, meanings. This phenomenon, called polysemy, can be seen in the listings of any dictionary. Each time a word is used a different aspect of its meaning may be activated. In the sentence, 'Just hand me that leaf, please' one may, according to the circumstances, be referring to the leaf of a tree (in a botany lesson), to a sheet of paper (in an office), to a sheet of metal (in a jewellery factory), or to an extra section to be inserted into an adjustable table being prepared for dinner. The problem is that such aspects of meaning are differently arranged in different languages—one of the main problems for machine translation. Thus Siertsema, who supplied the above example, points out that the Dutch word *blad* may refer to all the things that the English word 'leaf' does, but also can refer to a tea-tray (*tee-blad*). French in turn uses two terms for the latter according to the size of the item, viz. a *plateau* for the large size carried by a waiter but a *cabaret* for tea or coffee—neither of which can be used for the leaf of a tree which is *feuille* in French.[41] As no two languages put their word 'nets' in the same position there is never more than partial correspondence between apparent equivalents. There is a good discussion of the phenomenon of polysemy and its sources in Ullmann.[42]

Belloc pointed out that in addition to polysemy, there is another factor militating against lexical equivalence: 'The history of a word, its use in the prose and verse of the language...its use in certain masterpieces and remembered phrases, and in general all the atmosphere of its being'. He illustrated his point by taking the simple example of the word *terre* in French and the word 'land' in English.

> The word terre in French may be variously translated by the words land, soil, ground, earth—to give only four of its distinct meanings. Thus of sailors at sea, making a landfall 'C'est bien la terre' means 'It is certainly land'. 'C'est de la bonne terre' means 'It is good soil'. The fine sharp musical phrase 'Les Rois de la terre' in the 'Marseillaise' means 'The kings of all the earth' and 'Il mit pied a terre' means 'He put foot to ground'. In the plural 'ses terres', used of a magnate, means not his 'lands' but his 'land' or his' estate'—and so on. The difficulty is a familiar one. The ambiguities produced by it are difficulties against which even the most elementary translator is on his guard. But what must also be remarked and what is equally important when one is attempting the rendering of any great matter—great through its literary form or its message—is the atmosphere of the word. The word 'terre' in French is a long and powerful syllable to which the English word 'earth' alone corresponds and no other of its supposed equivalents. It is a more

---

40 R. Kassuhlke, 'Problems of Bible Translating in Europe Today' *TBT* 22 (1971) 126.
41 B. Siertsema, 'Language and World View',*TBT* 20 (1969) 8.
42 S.Ullmann, *Semantics* (Oxford: Blackwell, 1962) 167.

> profound word in a peasant society than in an urban society. There is more still: it connotes very vaguely but quite certainly in one language one type of landscape, in another, another. And there is more, it has been used by the poets and the great prose writers in different ways in the two languages and this historical difference marks its effect whenever it is used.[43]

In attempting to achieve translation equivalence at the lexical level, we are faced with two problems. Firstly the words of language A do not match up with those of language B in a one to one fashion. Secondly language B often does not have any lexical equivalent for terms in language A. Standard texts usually illustrate the first problem by reference to the unique way each language classifies colours or refers to its network of kinship terms. These two semantic fields provide fruitful contrasts if we compare Indonesian and English too. But an even more arresting example of the first type of lexical problem occurs when we seek to translate into Indonesian the English verbs 'come', 'bring' and 'take'. The Indonesian terms *mengantarkan* and *membawa* are distinguished on the basis of whether the thing conveyed is human or not, respectively. In English that is not relevant. The choice between 'bring' and 'take' as with 'come' and 'go' depends on whether the goal of the motion is in the vicinity of the speaker or addressee (or in a narrative the character whose point of view is being taken) or not. Thus when translating isolated sentences from English to Indonesian we may need additional information about the nature of what is being conveyed in order to make an appropriate choice between *mengantarkan* and *membawa*. Conversley, when translating from Indonesian to English, we may need additional information about the location of the speaker and addressee in order to choose between 'come' and 'go' or 'bring' and 'take'. Compare a similar problem encountered by Bible translators in North Burma. The Akha language demands that the exact direction of all movements be specified. In the translation of Hebrews 11:37 which refers to Jewish martyrs who 'were sawn asunder' the question inevitably arose: Which way? Lengthwise or across?

Sometimes in translating we find that one word may appear to be a translation of another in that they both refer to the same item in extra-linguistic reality. But on closer examination it becomes apparent that they occupy quite different places in the two semantic systems.

The second problem at the lexical level, as mentioned above, is when one language simply does not have any equivalent for some term in the other language. Thus English has very few words describing body positions while Austronesian languages tend to be rich in such descriptions. Take these two examples from Javanese:

---

43 H. Belloc, 'On Translation' (1931) reprinted in *TBT* 10 (1967) 80.

dege mbegagah: he stood with his legs spread out and his arms folded across his chest

iwake dipikul: he carried the fish in two baskets suspended from opposite ends of a pole which he carried across his shoulder.

However, when a particular word often recurs in a passage it is preferable to borrow it. A description of an Indonesian meal then might go as follows:

> Rice is the major food of Indonesia as it is throughout most of Asia. It is served at every meal. In addition some sort of fried or roasted item is almost always served. It may be meat or something else like bean-curd cake (*tahu* or *tempe*) or shrimp chips (*krupuk*). The term of this primarily dry item is *lauk*. In addition there is usually a vegetable dish with a considerable amount of broth. This is the *sayur* . And most Indonesians don't consider a meal complete unless it contains some kind of hot sauce called *sambel*. These items—rice, *lauk*, *sayur* and *sambel* , form the basic Indonesian meal. Sometimes though in place of the *lauk* there is a meat dish with a considerable amount of broth. When this is served, instead of *sayur* there may be a salad-like dish which consists of steamed vegetables with some kind of *sambel*. There are numbers of such salad-like dishes. *Pecel* has a hot peanut sauce. *Gado-gado* has more western type vegetables but also peanut sauce. Gudangan has vegetables similar to *pecel* but has cocunut *sambel*. *Tahu Guling* has fried bean-curd cake (*tahu*) and several vegetables such as sliced cabbage and bean sprout with a soya sauce sambel. Oddly enough there does not seem to be any covering term for this group of salad-like dishes.

It would be very difficult or at least awkward to convey all the information in the above without using the borrowed words. This is permissible as long as we know what we are doing. Anthropologists commonly do this in writing ethnographies. The first rule is to define the term. The second is not to use Indonesian words for which there are English equivalents.

Professional people in Indonesia and other developing countries often find that their national language does not have the technical terms that exist in, for example, West European languages. What does one do in linguistics to express concepts such as phoneme, syntax, discourse, dialect, register, etc? Sometimes the meaning of already existing indigenous terms can be extended. But borrowing is often advisable. If the borrowed term is modified to suit the phonological system of the borrowing language it probably won't be any harder to learn than a newly coined term. Furthermore, if it resembles the equivalent term in other languages this will facilitate reading technical material written in those languages. Thus linguistic text—books in Bahasa Indonesia use terms such as: *analogi, klausa, kolokatif, konotatif, transformasis,idiolek, standardisasi, foenem, sinonim.*

C. PROBLEMS ARISING FROM GRAMMATICAL DIFFERENCES

Translation involves the relation between form and meaning in two languages. Meaning which is signalled by the forms of one language has to be transferred so that it is signalled by the forms of another language. Since each language has its own distinctive form and patterns, the same meaning may have to be expressed in another language by quite a different form. The popular terms 'free', 'literal' and 'word-for-word' translation reflect different approaches to the form of the SL text in translation. Catford provides a more precise instrument of description by taking over Halliday's concept of 'rank scale':

> The rank scale is the scale on which units are arranged in a grammatical or phonological hierarchy. In English grammar we set up a hierarchy of five units—the largest, or highest, on the rank scale is the sentence. The smallest or lowest is the morpheme. Between these in descending order is the clause, the group and the word.[44]

Thus a word-for-word translation generally means what it says: it is essentially rank-bounded at the word rank. On the other hand a free translation is always unbounded—equivalences shunt up and down the rank scale, but tend to be at the higher ranks—sometimes between even larger units than the sentence. Literal translation lies between these extremes. It may take its starting point from a word-for-word approach but then make whatever modifications are demanded by the TL grammar. Catford gives an example of a Russian text whose form has to be modified to convey the meaning of the SL.

SL Text: *Bog s nimi*
TL Text: God with them (word-for-word)
God is with them (literal)
Never mind about them (free)

Only the free translation is interchangeable with the SL text where the addressee is being advised to dismiss or disregard a triviality.[45] This memorable Russian example reminds us that idioms will loom large among the difficulties encountered by the translator. Consider the absurdity of literal translations of such idioms as: 'put the wind up somebody', 'set one's heart on something', 'open one's heart to somebody', 'lose face', 'be up to the eyes in it', and 'give (a horse) its head'. Sometimes, too, a literal sense of the expression may continue alongside the idiomatic sense. Thus, such expressions as 'kick the bucket', 'pull someone's leg', 'take someone for a ride', 'let someone down', 'go a long way' are equally acceptable in both literal and idiomatic

---

44 J.C. Catford, *A Linguistic Theory of Translation* (London: Oxford University Press, 1965) 8
45 J.C. Catford, *A Linguistic Theory of Translation* (London: Oxford University Press, 1965) 26

senses and the translator will have to decide which is operative on the basis of context.[46]

Practical examples of grammatical problems facing translators from English to Indonesian or vice versa would include pronominalization and treatment of verbs especially with regard to voice and tense. With regard to pronouns, it has been pointed out that Bahasa Indonesia has a nine-term system (i.e., *aku*, *saya*, *kami*, *kita*, *engkau*, *kamu*, *ia*, *beliau*, *mereka*) as opposed to the English seven-term system (i.e., I, we, you, he, she, it, they), and that not one English translation equivalent has the same meaning, formally or contextually, as an Indonesian pronoun.[47] The Indonesian system contains two dimensions absent from the English system: the exclusive/inclusive 'we' (*kami/kita*) and familiar/non-familiar (*aku/saya*, *engau/kamu*, *dia/beliau*). Actually the non-familiar *beliau* is an honorific. It is the honorific dimension which displays the relative status or degree of intimacy of the participants in some European languages such as French, German, Russian and Italian. It is even more pronounced in some languages of the Indonesian archipelago (e.g., Javanese and Balinese) as well as other Asian languages such as Japanese, Korean, Thai, Burmese and Tibetan. The existence of honorifics has provided a fertile soil for dissension among Bible translators.[48] We may note too that the English pronoun system has a gender dimension (he/she/it) absent in Indonesian, not to mention its case endings.

More complex is the *use* of pronouns in narrative. In English once a character has been introduced he is usually referred to by a pronoun unless for some reason his identity needs to be restated (e.g., when the topic or the scene changes). However, in Indonesian, the topic in a narrative is not mentioned again once it has been established. This means that in translating into English one has to remember to put in all pronouns referring to participants in the action described by the verb. Similarly the English speaker in translating into Indonesian (or Javanese) has to know what to delete. The following extract and its translation illustrates this difference as well as demonstrating the Indonesian preference for a passive verb where English would use the active:

English: When the holy men saw Ken Angrok, they chased him and when they caught him they beat him and tortured him.

Indonesian: *Waktu para pertapa itu meli hat Ken Angrok, dia terus dikejarnya dan waktu tertangkap dipukuli dan dianiayanya.*

In the Indonesian, after the introduction of the characters, all the verbs are passive because the topic of the story is the patient of a series of actions. In English the topic is

---

46 cf. M.B. Dagut, 'Can Metaphor be Translated?' *Babel* 10(1973) 169

47 J.C. Catford, *A Linguistic Theory of Translation* (London: Oxford University Press, 1965) 44-45

48 T. Shigeo, 'Levels of Style in Japanese,' *TBT* 22 (1971) 52

not necessarily the subject of the sentence. The subject is selected mechanically; the sentences have to be active so whatever word order results gives us the subject. The topic is identified by other means. In translating, people tend to preserve subjects and objects according to the language they are translating from.

Another grammatical problem involves English tenses and related matters. In English every sentence indicates information about the time of the event or situation in relation to the act of speaking or writing (before, simultaneous with, or after), the aspect of the event being focused on (begun, in process, or completed), and mode. Indonesian does not have to specify any of this information (though most of it can be made explicit). In translating from Indonesian to English we must decide which tense, aspect and mode are intended. There are instances of entire Indoensian texts which are ambiguous from the point of view of an English speaker. Take the following:

> *Daging dipotong pesagi-pesagi setebal jari, lalu dikodok dengan santan dan bumbu-bumbu yang sudah ditumbuk halus, sampai empuk dan habis kuahnya, kituangi beberapa irus minyak kelapa lalu disoreng sampai kuning.*

Are these directions, or an ethnographic description of how Javanese prepare some particular dish? It seems to make no difference in Indonesian, but in English one must decide between one or the other. If these are *directions* the translation is:

> Cut the meant into cubes of about 1/2 inch thick (the thickness of a finger). Then boil them with coconut milk and the spices (which have already been ground (pounded)) until the meat is soft and the broth is gone. Then add a few dippers of coconut oil and fry until golden brown.

If this is an *ethnographic description* then the translation will be:

> They cut the meat into cubes of about 1/2 inch thick (the thickness of a finger). Then they boil them with coconut milk and the spices which they have pounded fine (using a mortar and pestle) in advance. (They boil the meat) until it is soft and the broth is gone. Then they add a few dippers of coconut oil and fry the meat until it is golden brown.[49]

In addition to cultural, lexical and grammatical difficulties in translation, Newmark points out two other sources of loss of meaning.[50] Firstly, we cannot in practice assume homogeneous use of language. Thus the author of the original text on the one hand, and the translator on the other, will have their idiosyncracies. Secondly, the translator may well have a different theory of meaning and different values from the

---

49 G. Soepomo, 'Problems in Translation', (unpublished; Salatiga, Indonesia, 1977) 4

50 P. Newmark, 'The Theory and Craft of Translation', *Language Teaching and Linguistic Abstracts* 9:1 (1976) 11.

text producer. The point is well illustrated by Newmark's allusion to the school report. Every school teacher knows that comments such as 'fair', 'average', 'competent', 'satisfactory', 'trying', 'a good type of lad', etc., can be interpreted in various ways. This is certainly the hope of the headmaster who restrains his staff from more honest, explicit and colourful commentary!

The above analysis and examples will suffice to show the inevitability of loss of meaning in translation, without mentioning other possibilities such as obscurities in the text or incompetence on the part of the translator. Obviously the success of the translation enterprise will be very much related to the context available—'the richer the context of a message; the smaller the loss of information'.[51] The nature and extent of the biblical corpus as context (or 'co-text') is of great significance for Bible translation, as we shall see later.

---

51 R. Jackobson, 'On Linguistic Aspects of Translation', *On Translation* (ed. R.A. Brower; New York: Oxford University Press, 1966) 264.

CHAPTER FOUR

SACRED TEXTS AND TRANSLATION THEORY

A. SACRED TEXTS AND TRANSLATION

Nearly all the great religions of the world have either given rise to a language or have carried the obscure dialects that first served them to distant areas and world renown. The Jewish faith has spread Aramaic and Hebrew, not to mention Yiddish and Saphardi, far beyond the borders of Palestine. Islam carried the once isolated language of southern Arabia to vast regions of Europe, Asia, Africa, and Oceania; such languages as Persian, Hindustani, Turkish, Hausa, Swahili and Indonesian are replete with Arabic words. Buddhism transferred the sacred writings of Gotama's faith to Tibet, Siam, Indochina, China and Japan. Christianity found two thoroughly established languages, Greek and Latin, ready to be utilized, and it was largely through the Christian faith that these two languages survived and spread despite the conquest of the Roman Empire by waves of Germanic invaders.

It has been said that religion, by its very nature, demands translation. Firstly it must express immortalities in mortal languages which quickly become archaic. Secondly its universal nature must find expression in the idiom of various kinds of societies.[52] The idea is arresting but not strictly true, at least with regard to the translation of sacred scriptures. Many religions have shown no inclination to promote the translation of their religious texts. Islam is an obvious example. Moslems have never come to terms with translation. The Qur'an is regarded as being untranslatable. A crucial aspect of its revelatory credentials is the incomparability of its Arabic expression. Thus, even though many non-Arab races—Persians, Turks, Pakistanis, Indians, Indonesians, Malays, Hausas, and scores of others, have the Qur'an at the centre of their religious existence, with only a fraction of their members having access to it in the original Arabic, its untranslatability into their language is an article of faith. 'We have sent it down an Arabic Qur'an.' An Arabic Qur'an is the deliberate self-designation of the Scriptures of Islam (see Surahs 12:2; 20:3; 41:3; 42:7 and 43:3), and centuries of exegesis have confirmed that if God willed that His Holy Book should be Arabic, submission demands that it should not be turned into another tongue. It is for this reason that the English Moslem, Marmaduke Pickthall in 1920 entitled his translation *The Meaning of the Glorious Koran*. Others have got over the difficulty by printing

---

52 H. Belloc, 'On Translation' (1931), reprinted in *TBT* 10 (1967) 84

Arabic and the vernacular in parallel columns (e.g., H.B. Jassim in his Indonesian translation). There is dogma therefore about the form as well as the substance, and these are not separable. Once given, in the revelatory particular which is Arabic, Scripture cannot be transposed. Translation deliberately destroys form and this dishonours the Divine Mind that decreed the Arabicity.[53]

Christianity on the other hand has been from the start a translating religion. It is true that from time to time in Church History, there have been individuals who have claimed biblical Hebrew and Greek to be the peculiar dialects of the Holy Spirit but this has never been the orthodox view. Conviction concerning the actuality of God's activity within history has implied that Revelation has not meant lifting human language out of its cultural milieu; but rather that it exploits the potentiality of language for communication within its sociological matrix.

> Numerous relativity factors operate here. Jesus was a Jew, not an Aztec: he spoke Aramaic, not English. There is a cultural and historical conditioning of individual psychology and of man's language within the socio-anthropological matrix of his life. There are bounds to the capacity of a given language at a particular time, set by the repertoire of forms and potentials in current use. Creativity may develop the potentials, and God's agents in revelation have clearly done this with great new strides of thought and originality of expression—none more marvellously than our Saviour himself. But still they must work with the 'given', and cannot strain the stock of words and structures with inventions unrecognizable by listeners and readers.[54]

Thus many, if not most, of Europe's languages have as their first written document a translation of the Bible. This is true of the first Germanic tongue to boast a literary form, Gothic, which Bishop Wulfila introduced to the world in his fourth century translation of the Scriptures; of Armenian and Georgian which first appear in a similar form in the fifth century; of Slavic, for which the brothers Cyril and Methodius devised the Cyrillic alphabet in the ninth century; of Albanian with its baptismal ritual of 1462; of Finnish with its 1548 Bible; and many others.

At the same time established languages were assisted on the road to standardization and modernization by religious texts. The powerful influence of Luther's High German translation, and the role of the KJV in fixing standards of modern literary English have already been mentioned. It is true that in the Middle Ages, the Church in Europe used the Bible in Latin, and not in the popular languages. But one must remember that, in this period practically all literary, scientific and administrative activities were carried out in Latin. Furthermore much Biblical material was translated into vernacular languages.

---

53 W.C. Smith, *Islam in Modern History* (New York: Princeton University Press, 1957) 26

54 F.I. Anderson, 'The Language of Scripture', *Interchange* 1:2 (1967) 69.

Even though this activity was subsequently frowned on (and the laity discouraged from Bible reading), it was never stopped altogether. Today in hundreds of tribal languages in areas such as South America, Africa and Austronesia, missionary translators are repeating the achievements of their early predecessors.

But while Bible translation is a typically Christian activity, it was started by the Jews. Christians took over two existing Jewish versions, the Septuagint and the Peshitta. The evidence shows that the former was used quite independently of the Hebrew text. Even a scholar such as Philo of Alexandria in the second century AD based his theological discussion on the Greek Bible without apparently being aware that it was often not identical in sense with the Hebrew original.

The typical Jewish Bible translation, however, and the one that gained permanent authority in the whole Jewish world, was the Aramaic Targum. This was indeed a translation of a peculiar kind. At first it was not written down. Rather, the translator stood next to the lector in the Synagogue and orally rendered each verse into Aramaic after it had been read in Hebrew. The Targums, originally, were oral interpretations reflecting the official view of what the sacred text meant. Subsequently they were recorded for use as a commentary alongside the sacred text. That Jewish communities did not again produce translations of the type represented by the Peshitta and the Septuagint, no doubt represented a reaction in the face of vigorous Christian polemic which made considerable use of the latter, especially in seeking to convince Jews that Jesus of Nazareth was their Messiah.

Christian translation then, assumed an entirely different standing from Jewish translation. The version was not regarded as a mere aid to understanding, but as an authoritative replacement. Because of this the translation served as a theological equivalent of the original text. This in turn influenced the approach of the translators who tended to produce quite literal renditions. This emphasis on formal correspondence to the source text found in, for example, Augustine, and to a lesser extent, Jerome, and in those who translated the Latin Vulgate into European vernaculars, was contrary to the prevailing fashions in the translations of secular works. But these translators were not ignorant of the artistic techniques devised by the Roman writers for the translation of Greek works. Rather the more literal approach was deemed appropriate for the sacred text and only minimum concessions were often made to the grammar and idiom of the TL.

This is clearly an issue to which we must return later, for the question is complex. Basically there are two quite different concepts of translation. One is that the translation should read like an original creation in the TL. 'That is the very essence of

the art, the resurrection of an alien thing in a native body'.[55] The other attitude which has tended to prevail until recently in Bible translation, focusses on the meaning of the source text rather than on successful communication. It seeks to take the reader back into the alien world of the author.

The prevalence of this latter attitude in Bible translation has led Chaim Rabin to comment:

> It is the tendency of the Christian Bible translations to become independent sources of religious authority and emotion which is, to my mind, their most typical trait, and to the best of my knowledge, does not exist in other religions with regard to the translation of their sacred texts. This is also the reason why Bible translation in the Christian world has been so conservative in its methods.

He goes on to pinpoint a new trend largely inspired by the writings of Eugene Nida by which, 'Bible translation has been brought much closer to modern translation in general, and will not fail to become part of it and share its advances.'[56]

B. LINGUISTIC THEORY

Modern Linguistics has externalized many of the intuitive processes of translation. What was previously the preserve of the philologist, language teacher and professional interpreter has, since 1945, been subjected to the more scientifically oriented theorizing that we associate with names such as Firth, Catford and Nida. As we have noted this theory has been influenced by ideas stemming from linguistics, literary criticism, ethnography, communication theory, machine translation, psychology and philosophy, but the dominant influences seem to have come from theoretical linguistics.[57] With regard to Bible translation Nida has pointed to three principal theories about language structure which have been significant:[58] tagmemics, stratificational grammar and generative-transformational grammar. We would add systemic grammar. It would not be possible to do justice to them here, but some brief introduction would not be inappropriate before we conclude Section I by considering what contribution we might legitimately expect from linguistics with regard to the theory and practice of translation.

1. Tagmemic Grammar

Tagmemics, developed by Kenneth L. Pike and his colleagues of the Summer Institute of Linguistics, essentially stems from more traditional views of language structure

---

55 H. Belloc, 'On Translation' (1931) reprinted in *TBT* 10 (1967) 96.
56 C. Rabin,'Cultural Aspects of Bible Translation', *Babel* 18:3 (1972) 17, 19.
57 D. Crystal, 'Some Current Trends in Translation Theory', *TBT 27:* (1976) 322.
58 E. A. Nida, 'Communication and Translation', *TBT* 23 (1972) 309-16.

which focussed on the positions in the grammar of those words or units which could fill those positions. For example, in analysing a sentence such as 'The old man went home yesterday', the positions of the definite article 'the', qualifying adjective 'old', noun 'man', verb 'went', locative attributive 'home' and temporal attributive 'yesterday' are all carefully noted and all the words and expressions which might possibly fill such positions are described. For example, the article position can be filled by 'a', 'this', 'that', 'one' and for the plural by 'some', 'many', 'few' etc. Furthermore, the unit 'the old man' constitutes a subject position, and a pronoun such as 'he' can occupy this entire slot. Likewise the predicate slot can be occupied by a single verb, e.g., 'died'. The size of the slots and fillers and their hierarchical ordering are also important. Moreover, one has to constantly note the restrictions upon occurrence: 'a' occurs only with singular nouns, 'many' with plural nouns, while 'the' may occur with either singular or plural. It must be noted too that a past tense has a valence relation with an expression such as 'yesterday' while other tenses are related to other kinds of time words. Because tagmemics ascribes such importance to slots and fillers, and gives priority to the analysis of text, it has proved eminently suitable for initial field work. Beginning linguists have also been helped by the relatively simple notational system which does not depend too heavily on mathematical concepts.

2. Stratificational Grammar

Stratificational grammar, associated with the name of Sydney Lamb of Yale and H.A. Gleason of Toronto focusses upon the levels of language and for the most part deals with five different strata (cf. Halliday's 'levels' of structure): semantic, lexical, syntactic, morphological and phonological. One may begin, for example, with the semantic level of potentiality and trace this through the lexical level, where it is commonly expressed either by a modal *can* or the verb phrase *be able* and the suffix *-able*. These same elements can be described on the syntactic level: *can* as an auxiliary verb and *be able* as a verb phrase. On the morphological level, one must describe the morpheme alternates of *can* and the ways in which the suffix *-able* combines with certain stems. Finally, on the phonological level, one focusses upon the different ways in which *can, be able* and *-able* are phonologically actualized. One could, of course, begin with the phonological level and trace developments up through any and all the other strata. In order to describe precisely the relations of elements on all levels and how they relate to one another, there is an elaborate system of networks and grids to define interdependencies.

The principal contribution of stratificational grammar to translation has been in discourse structure. But the elaborate system of notation and network analysis developed by Lamb and his colleagues has proved too cumbersome for the kind of practical application needed by those working with larger units.

3. Transformational Generative Grammar

The approach develped in the late fifties known as 'generative grammar' is associated primarily with the name of Noam Chomsky, and marked a sharp reaction against the structuralist approach of the Bloomfieldians, which had been so prejudiced against postulating any kind of 'mental' constructs. TG grammar subsequently underwent rapid modifications at the hands of linguists such as Bach, Chafe, Fillmore, Jackendoff, Lakoff (both George and Robin), Langendoen, Lees, McCawley and Ross.

The fundamental concept of TG grammar is that what people actually say (the surface structure) can be best explained in terms of a base (the deep structure) from which it is derived by transformational processes. Originally the base structure was described in terms of 'kernels'—for example, simple positive declarative statements from which negative and interrogative expressions could be derived. Hence, underlying *Did John work?* would be a kernel *John worked* and underlying *John did not work* would be the same kernel *John worked.* The transformation would explain the change of a statement to a question and a positive statement to a negative one. In later developments of the theory, it seemed much better to place the negative and question component in the deep structure, and thus remove any semantic content from the transformations. Any complex sentence (e.g., *When he arrived, we left* or *I knew that he was coming*) would be made up of two base sentences combined by means of various transformations.

TG grammar makes a very important distinction between language performance and language competence. These two aspects of language are somewhat similar to the distinction which linguists formerly made between *parole* (speech) and *langue* (language). But in TG grammar performance involves not only the encoding but also the decoding process, while competence involves the internalised set of rules which make it possible for a speaker/hearer to construct well-formed sentences and to interpret them. Furthermore, this also implies an ability to detect poorly formed or nonsense sentences and to make expressions which may have two or more meanings unambiguous.

In the early form of TG grammar, syntax was regarded as the primary structural component of language, with nonlinguistic reality being touched only in the areas of semantics and phonology. This resulted in positing in the deep structure a great deal of the meaning of sentences and even the restrictions as to what words could occur together. For example, *bright* could go with *boy*, *light*, *day*, *thought*, *colour* and *reflection*, but not with *osmosis*, *humidity* and *sorrow*. These non-occurrences were

regarded as being blocked by certain secondary restrictions. Finally, so many of the meaningful relations were assigned to the deep structure that lingusts eventually recognized that the deep structure was essentially the semantic structure itself.

As more people employed the TG model of linguistic analysis, they saw many additional applications for it. In the first place, it was extensively used to explain many of the complex phonological phenomena, in which the focus was no longer upon the phoneme but upon those features which made up the morphophonemes. In analysing the componential features of lexical units, the arrangements likewise suggested some of the same relations as existed between components of clauses. Hence, generative semantics developed. But the principle of this model of grammar was its focus upon the dynamic aspects of language and the manipulative techniques by which the native speaker can explore the range of possibilities which his language possesses.

The TG model of grammar provides techniques to describe relations from base to surface structure and from surface structure to base. But Chafe, in an adaptation of TG grammar, insisted upon setting up semantic structure as autonomous and describing the processes involved as a series of mappings. Hence, the semantic structure is lexicalised and mapped onto the syntactic structure, and this in turn is mapped onto the phonological structure. Semantics is thus no longer a collection of labels for syntactic structures or a convenient device for indexing lexical units.

4. Halliday's Systemic Linguistics

J.C. Catford's *A Linguistic Theory of Translation* [59] has already received honourable mention as a succinct and highly vigorous treatment of what is involved in the translation process. We note the author's acknowledgement that 'the general linguistic theory made use of in this book is essentially that developed at the University of Edinburgh, in particular by M.A. Halliday and influenced to a large extent by the work of the late J.R. Firth.' It is appropriate, then, to mention the work of the Emeritus Professor of Linguistics at the University of Sydney as well as the three American theorists singled out by Nida above. Halliday's work can be traced back to that of Firth and via Firth to Malinowski. Two Malinowskian concepts have paticularly influenced his thinking: that of 'meaning as function in context' and the view of language as performing a number of functions related to the culture in which it operates.[60]

---

59 J.C. Catford, *A Linguistic Theory of Translation* (London: Oxford University Press, 1965)

60 C. S. Butler, 'Recent Developments in Systemic Linguistics', *Language Teaching and Linguistic Abstracts* 1979:71

Halliday has, over the past thirty years, evolved his 'systemic' model: 'system' being one of the four fundamental categories of neo-Firthian linguistic description (viz. unit, structure, class and system). At any given place in a structure, the language allows for a choice among a small, fixed set of possibilities (we can have *the/this/my/a...man,* for instance), and there is some similarity to the Saussurean concept of paradigmatic relationships. Language is viewed as a series of 'system networks', each network representing the choices associated with a given type of constituent (e.g. clause system network, nominal group system network, etc.). On this approach, it is the clause system which is taken as the point of departure in analysis, not the sentence as in most other models. Halliday's approach, like that of Pike, seeks to integrate information about structure with information about classification in a single model. In the hierarchy of units, for instance, each unit has a particular structure and belongs to a particular class, and thus has a range of functions. For translation theory, Halliday's observations on syntactic systems and structures have drawn attention to such important features of language as sentence focus, registers and cohesion.

C. LINGUISTIC THEORY AND BIBLE TRANSLATION

What contribution to the theory and practice of Bible translation can one legitimately hope for from a general linguistic approach? Crystal[61] makes five points which I shall paraphrase:

1. There is a need for a comprehensive account of the translation process that does justice to the complexity of language structure.
2. Linguistics can provide a more objective metalanguage based upon the characteristics of a text. (So much discussion of various versions of the Scriptures in ecclesiastical circles fails to be productive because of the use of opaque terms such as 'faithful', 'accurate', 'sober', etc.)
3. Crystal would also like to see more investigation into the synchronic and diachronic relationships between languages to ascertain whether there is evidence for the notion of a common 'deep structure' for all languages, or whether there are fundamental psycho-socio-linguistic barriers separating different language groups.
4. The notion of translation equivalence needs clarification.
5. The correlative notion of translation acceptability and the permitted tolerance of variation also need clarification.

---

61 D. Crystal, 'Some Current Trends in Translation Theory', *TBT* 27 (1976) 322-323

Crystal's own discussion does not advance very far but his points are extremely useful. Certainly as we turn to examine the writings of Eugene Nida we shall be looking for such a comprehensive description of what is involved in the translation of the Bible and in particular shall be seeking an appropriate definition of translational equivalence.

II The Dynamic Equivalence Theory Of Eugene A. Nida

CHAPTER FIVE

AN ORIENTATION TO NIDA'S SOCIO-LINGUISTIC THEORY OF TRANSLATION

A. THE BACKGROUND

Eugene A. Nida has been a prolific writer on linguistic themes for some five decades. The *Festschrift* published by Mouton in 1975 listed twenty three books and a partial list of fifty eight journal articles.[1] Most of the articles were contributions to *The Bible Translator* and *Practical Anthropology*, two journals which he helped found and which he served as editor. Both have proven effective media for his untiring efforts to make available, for Bible translators especially, insights from linguistics and the social sciences. An examination of the titles of Nida's books in chronological order would indicate four distinct phases in his theorizing:

1. The Descriptive Linguistic Phase (1943-1951)

This is best represented by his text *Morphology*[2] a book which has continued to be used long after its theoretical orientation became out of date. Its durability stems from the amazing array of linguistic problems collected in the course of extensive travels. Furthermore, five years before the publication of Chomsky's *Syntactic Structures*(1957), usually considered a landmark in linguistic theory, Nida published an article, 'A New Methodology of Biblical Exegesis'[3] which raised questions concerning what was subsequently to be known as deep structure and case grammar.

2. The Cross-Cultural Communication Phase (1952-1960)

This saw the publication of his eminently readable *Customs and Culture*[4] as well as the book which best represents his own outlook and motivation, *Message and Mission*.[5]

---

1 M.Black and W. Smalley eds, *On Language, Culture and Religion: In Honor of Eugene A. Nida* (The Hague: Mouton, 1975) xxi-xxvii

2 E.A.Nida, *Morphology: The Descriptive Analysis of Words* (Ann Arbor: University of Michigan Press, 1949).

3 E.A. Nida, 'A New Methodology in Biblical Exegesis,' *TBT* 3:3 (1952) 97-111.

4 E.A. Nida, *Customs and Culture* (New York: Harper and Row, 1954)

5 E.A. Nida, *Message and Mission* (New York: Harper and Row, 1960).

3. The Translation Theory Phase (1961-1973)

This is marked by *Toward a Science of Translating*,[6] a wide-ranging treatment which represented a first attempt to expound at length his theory of Dynamic Equivalence (DE) translation. His earlier handbook *Bible Translating*[7] had been orientated to Aboriginal languages and was basically a collection of practical hints and suggestions. The new book attempting a coherent theory of translation was broadly based and drew on insights from communication theory, psychology, Biblical studies, and especially the developing fields of semantics and transformational grammar. Subsequently it was to be amended and clarified at many points by the textbook *The Theory and Practice of Translation*.[8]

4. Nida's Semantic Phase (1974-1983)

This was signalled by the publication of his *Componential Analysis of Meaning*.[9] His work on semantics and discourse analysis continues, including a semantic analysis of the vocabulary of the Greek New Testament.

Over the years, then, it is evident that Nida's central interest in language has shifted from the analysis of formal structures, principally morphology and syntax, to the analysis of semantic structures. The shift was an almost inevitable result of the increasing concern with translational equivalence. No doubt, too, it reflects the fact that he did not stand aloof from the revolutionary developments taking place in Linguistics during this period. He was, in fact, elected President of the Linguistic Society of America in 1968.

In order to produce a critique of the DE theory of translation one must decide which of Nida's many writings might be regarded as being sufficiently definitive. Fortunately in an Author's Postscript to another volume we find the needed guidance: 'Much of what I have written on translation theory is now best summarised in the volume *The Theory and Practice of Translation*.'[10] Accordingly, TAPOT, as it is commonly called, (which was written with Charles R. Taber) will be the basic resource. For even though Nida seems to have refined his theory in subsequent years, it is the principles and procedures expounded in TAPOT that underlie the Good News Bible and its foreign language counterparts.

---

6 E.A. Nida, *Toward a Science of Translating* (Leiden: Brill, 1964).

7 E.A.Nida, *Bible Translating* (Revised 1961; London: United Bible Societies,1947).

8 E.A. Nida and C.R. Taber, *The Theory and Practice of Translation*, (Helps for Translators, No.8; Leiden: Brill, 1969)

9 E. A. Nida, *Componential Analysis of Meaning* (The Hague: Mouton, 1975)

10 A S. Dil ed., *Language Structure and Translation: Essays by Eugene A. Nida* (Stanford, California: Stanford University Press, 1975) 271.

5. Nida's Rhetorical Phase (1984 -)

In the period subsequent to the publication of the GNB and its foreign language counterparts, that provide the focus of this investigation, Nida's thinking has not remained static. Even in retirement his writings have continued to interact with recent developments in linguistics that are a long way from the Bloomfieldian structuralism which provided the original matrix for his translation theory.

An article on 'Rhetoric and Style'[11] 1984 proved a precursor of a new interest in rhetorical processes in discourse structure, and their signifcance for translation. An important book, *From One Language to Another*[12] (1986) co-authored with Jan De Waard, signalled some modification of the approach of TAPOT as the subtitle 'Functional Equivalence in Bible Translating' implied. Its chapter on Lexical Meaning discussed 'semantic domains' along lines that foreshadowed major works to come: *A Greek-English Lexicon of the New Testament Based on Semantic Domains* (1988) and *Lexical Semantics of the Greek New Testament* (1992), both co-authored with J.P. Louw.[13]

Nida has distanced his own approach to translation from the more traditional philological and linguistic approaches.[14] Philological approaches to the problems of translation have focused on differences in style characteristic of diverse literary genres. Philological theories of translation (e.g., Belloc 1931; Brower 1947; Carey 1956; Goethe 1827; Nabakov 1955; Pasternak 1958; Tytler 1790) have been mainly concerned with literary texts and the emphases have been on (a) the source of the thematic and formal features of the text and their later influence upon other literary productions, (b) the stylistic peculiarities of the author, and (c) the thematic structures.

In the philological tradition the principles of translation have been formulated in general terms. Subsequently a series of exceptions applicable to particular types of literary genres were added. Nida acknowledges that this approach has often been helpful in teaching the skill of translation, and that various institutes designed to train translators and interpreters have been able to produce competent inter-lingual technicians.

---

11 E.A. Nida, 'Rhetoric and Style: A Taxonomy of Structures and Functions', *Linguistic Sciences* 6 (1984) 287-305.

12 Jan De Waard and E.A. Nida, *From One Language to Another: Functional Equivalence in Bible Translating* , (Nashville: Thomas Nelson, 1986).

13 J.P. Louw and E.A. Nida, *A Greek English Lexicon of the New Testament Based on Semantic Domains* (2 Vols) (New York: UBS, 1988); E.A. Nida and J.P. Louw, *Lexical Semantics of the Greek New Testament*, (Atlanta: Scholars Press, 1992).

14 E.A. Nida, 'The Nature of Dynamic Equivalence in Translating', *Babel* Vol.23:3 (1977) 216.

Usually, however, there is no attempt to state why a particular procedure or principle should be followed.

Linguistics has traditionally provided a broader view of language than philology. This has accordingly been reflected in the Linguistic theories of translation.[15] Attention has been given to levels of language (registers), types of correspondence, equivalence of language categories, and rules for transfer and restructuring. But the outstanding deficiency of the linguistic orientation hitherto, according to Nida, is that insufficient attention has been paid to either the author or the receptors. The texts are treated essentially as objects in and of themselves, more or less unrelated to actual communication events.

Because of this tendency to overlook the significance of translation as an act of communication, Nida[16] and later Nida and Taber[17] have sought to focus attention upon the role of the receptors. The substitution of the term 'receptor' for the more traditional term 'target' is not insignificant. The receptors, those who must decode and understand the message, are seen as an integral part of the communication process. The capacities, interests and pre-suppositions of the receptors are primarily responsible for the success or failure of any translation. That means for Nida that the receptors largely determine the formal features any satisfactory translation must possess. The principal focus of this 'sociolinguistic theory of translation' is 'translation as an act of communication'.[18]

B. THE NEW CONCEPT OF TRANSLATION

The first two chapters of TAPOT expound the new concept of translation in broad terms. Subsequent chapters take up in systematic order the fundamental procedures that are being recommended: grammatical and semantic analysis, transfer, restructuring and testing. The authors acknowledge that their textbook is not exhaustive. In particular there is need for further amplification of structural semantics (including componential analysis), and of discourse analysis.

In the first chapter the old focus and the new focus of translation are contrasted. Traditionally translators have focused on the form of the message, taking delight in

---

15 J.C. Catford *A Linguistic Theory of Tranlsation*, (London: Oxford University Press, 1965). R. Jakobson 'On Linguistic Aspects of Translation' in R.A. Brower ed. *OnTranslation* (New York: Oxford University Press, 1966) 232-239.

16 E.A. Nida, *Toward a Science of Translating* (Leiden: Brill, 1964).

17 E.A. Nida and C.R. Taber, *The Theory and Practice of Translation*, (Helps for Translators, No.8; Leiden: Brill, 1969).

18 E.A. Nida, 'The Nature of Dynamic Equivalence in Translating', *Babel* Vol.23:3 (1977) 217.

reproducing the stylistic parallelisms and unusual grammatical structures. A sociolinguistic translation theory on the other hand focused not on the forms of the message but on the response of the receptor:

> This response must then be compared with the way in which the original receptors presumably reacted to the message when it was given in its original setting. Even the old questions: "Is this a correct translation?" must be answered in terms of another question, namely: "For whom?" Correctness must be determined by the extent to which the average reader for which a translation is intended will be likely to understand it correctly. Moreover we are not concerned merely with the possibility of his understanding correctly, but with the overwhelming likelihood of it. In other words we are not content merely to translate so that the average receptor is likely to understand the message; rather we aim to make certain that such a person is very unlikely to misunderstand it.[19]

This implies that there will be different translations that can be regarded as 'correct'. For the biblical scholar, for instance, the most literal translation will be correct as he is acquainted with the forms of the source text (ST). But in most large linguistic communities there are a number of socio-educational levels of speech and comprehension so that several different levels of translation (in terms of vocabulary and grammatical structure) are required if all people are to be essentially equal in opportunity to understand the message.

This criterion of comprehensibility demands the elimination of two different types of expression: (1) those which are likely to be misunderstood and (2) those that are so difficult and heavy as to discourage the reader from attempting to comprehend the content of the message. The first category is exemplified by such idioms as 'children of the bride-chamber' (Mark 2:19) and 'to heap coals of fire on his head' (Rom 12:20). Such Semitic idioms baffle the average reader who does not realise that the first means friends of the bridegroom while the second means to make a person ashamed of his behaviour—it is not a kind of torture! The second type is illustrated by citation of a number of biblical passages (viz. 2 Cor 3:10; Matt 3:15c; John 1:14; Rom 1:17 and 3:21-23) and their rendering by the KJV on the one hand and by more idiomatic versions, especially the Good News Bible (GNB) on the other. The latter is clearly superior in terms of comprehensibility.

Elsewhere Nida seems to anticipate (or react to) criticism of the receptor-orientation of his theorizing:

> The role of the translator is not the same as that of the exegetical commentator, but no translator can afford to produce a text without considering the manner in which the prospective audience is likely to

---

19 E.A. Nida and C.R. Taber, *The Theory and Practice of Translation*, (Helps for Translators, No.8; Leiden: Brill, 1969) 1.

UNVERSITY OF SHEFFIELD LIBRARY

> interpret it. Translating is essentially an act of communication and if the resulting translation is not understandable or is generally misunderstood, it is obviously not a satisfactory translation, regardless of the manner in which certain formal devices have been imitated or the lexical units carefully matched. As an event of communication the translation cannot be regarded merely as a document. It is a message which is to be received, decoded, and responded to by the receptors whose background experience, system of values and concepts about translational adequacy are almost invariably different from those who received the original communication.[20]

The new concept of translation requires new attitudes with respect to both Receptor Language (RL) and Source Language (SL).[21] With regard to the RL it must be recognized that each language has its own genius which must be respected if communication is to be effective. The good translator will not hesitate to make whatever formal changes are necessary to reproduce the message in the distinctive dress of the RL. Anything that can be said in one language can be said in another unless the form is an essential element of the message. So there is some loss of meaning where the form of the original involves, for instance, a play on words which cannot be reproduced in the RL. The example given is the use of pneu'ma in John 3. This single Greek term is used to refer to both wind and spirit (like its Hebrew equivalent) but the significant play on words in the Greek text cannot be reproduced in translation into English or most other languages. However a marginal note can be added to draw the attention of the reader to the SL phenomenon.

The corollary of the above is that to preserve the content of the message the form must be changed. The extent of the change needed depends upon the linguistic and cultural distance between the languages involved. Thus it is easier to translate from English to German than from English to Hungarian. All three share the same Western technological cultural setting but linguistically Hungarian is a member of the Finno-Ugrian language family not the Germanic branch of the Indo-European family of languages. However, if one has to translate from English to Hindi the form changes are greater than from English to Hungarian. For even though English and Hindi both belong to the same Indo-European family of languages, the cultural contexts, including many differences of world view, are so diverse that the formal structure patterns require more extensive modification in order to preserve the context. Translation from English to Zulu would require even more extensive changes as Zulu belongs to a different linguistic family (Bantu) and represents a totally different culture.

---

20 E.A. Nida, 'The Nature of Dynamic Equivalence in Translating', *Babel* Vol.23:3 (1977) 227.

21 E.A. Nida and C.R. Taber, *The Theory and Practice of Translation*, (Helps for Translators, No.8; Leiden: Brill, 1969) 3-11.

A new attitude to the SL is also called for. Behind much Formal Correspondence (FC) translation in the past lay an unwarranted awe towards Hebrew and Greek as sacred languages. The languages of the Bible must be seen as having the same potentialities and being subject to the same limitations as any other natural language.[22] The message of the Bible was expressed in words which have meaning only in terms of the cultural contexts in which those languages were used. The vocabulary of the Bible was rooted in the finite experience of men and women of those times. However, terms were sometimes used in special ways just as one may do in any language when one wants to communicate some new insight. Another important assumption of DE Bible translation is that the biblical writers expected to be understood. They employed 'common language'—the so called Koine Greek.[23] This is very significant for Nida. They were addressing themselves to concrete historical situations and were speaking to living people confronted by pressing issues. Therefore, unless an ambiguity is linguistically 'marked', the translator should not 'ride the fence' in the case of expressions which can be interpreted more than one way. The most likely meaning must be selected. The others can always be placed in a marginal note.[24]

A simple definition of translation begins Chapter 2—'Translating consists in reproducing in the receptor language the closest natural equivalent of the SL message, first in terms of meaning and secondly in terms of style'.[25] This task of reproducing the message entails seeking equivalence rather than identity which would include preservation of the forms of utterance. The translator seeks *natural* equivalents. The best translation does not sound like a translation, nor should there be any trace of awkwardness in its grammatical and stylistic forms. However, the historical context of the Scriptures must be retained. One should not render the Bible as if it all happened in the next town ten years ago. Thus the natural equivalent chosen must be the *closest* one. 'Demon possessed' cannot be replaced by 'mentally distressed'. It is not the closest natural equivalent and represents a re-interpretation of the cultural outlook of the biblical writers.

The definition gives priority to meaning, i.e., the content of the message. This often necessitates radical restructuring of the formal structures. However, style is also important. While it is often quite impossible to represent some of the stylistic subtleties of the original (e.g. puns, acrostic poems, rhythmic units), marginal notes can be helpful and are in fact essential in the case of plays on words (e.g. as in the usage of

---

22 E.A. Nida and C.R. Taber, *The Theory and Practice of Translation*, (Helps for Translators, No.8; Leiden: Brill, 1969) 7.

23 E.A. Nida, *Good News for Everyone* (Waco TX: Word Books, 1977) 12

24 E.A. Nida, 'The Nature of Dynamic Equivalence in Translating', *Babel* Vol.23:3,1977) 8.

25 E.A. Nida and C.R. Taber, *The Theory and Practice of Translation* , (Helps for Translators, No.8; Leiden: Brill, 1969) 12.

certain biblical names—Abraham, Israel, Sarah, Cain and Abel). It is functional equivalence that must be sought on the level of style as well as on the level of content. Accordingly the RSV (1946) is criticised because it reproduces many formal features of Mark's 'typical Semitic Greek.'[26] Thus in Mark 1 the RSV has 26 sentences beginning with 'And'. This reproduces Mark's καί which in turn reflects the influence of the Hebrew conjunction ו, but is in conflict with good English usage and does not therefore represent functional equivalence. Similarly one should not reproduce form features such as 'it came to pass' which is just a transitional word marking the beginning of a new episode in the Greek text, again reflecting the Hebrew וידהי

As a basis for deciding what should be done in specific translation situations the authors expound four fundamental sets of priorities:

1. Contextual consistency has priority over verbal consistency (or word-for-word concordance).
2. Dynamic equivalence has priority over formal correspondence.
3. The aural forms of the language has priority over the written form.
4. Forms that are used by and acceptable to the audience for which a translation is intended have priority over forms that may traditionally be more prestigious.[27]

Let us look at Nida's four principles more carefully:

1. Contextual consistency has priority over verbal consistency[28]

The semantic areas of corresponding words are not identical. Therefore, in translation, the choice of the right word in the receptor language to translate a word in the source language text, depends more on the context than upon some fixed system of verbal consistency. The point is illustrated by reference to the rendering of the Greek word σῶμα in a formal correspondence version such as the Revised Standard Version (RSV) and in idiomatic translations such as the Good News Bible (TEV 'Today's English Version', later designated GNB). The RSV translates literally 'body' on each occurrence of σῶμα, whereas the translators of the New English Bible (NEB) and TEV make no attempt to retain verbal concordance because of their concern for contextual consistency. The table from TAPOT:15 is reproduced below:

---

26 E.A. Nida and C.R. Taber, *The Theory and Practice of Translation*, (Helps for Translators, No.8; Leiden: Brill, 1969) 14.

27 E.A. Nida and C.R. Taber, *The Theory and Practice of Translation*, (Helps for Translators, No.8; Leiden: Brill, 1969) 14.

28 E.A. Nida and C.R. Taber, *The Theory and Practice of Translation*, (Helps for Translators, No.8; Leiden: Brill, 1969) 15-22.

1. Matt 6:25

RSV	about your body
NEB	clothes to cover your body
TEV	clothes for your body

2. Mark 5:29

RSV	she felt in her body
NEB	she knew in herself
TEV	she had the feeling inside herself

3. Luke 17:37

RSV	where the body is
NEB	where the corpse is
TEV	where there is a dead body

4. Rom 12:1

RSV	present your bodies
NEB	offer your very selves
TEV	offer yourselves

5. Col 2:11

RSV	putting off the body of flesh
NEB	divested of the lower nature
TEV	freed from the power of the sinful body

Similar tables are provided for the translation of the Greek term σάρξ (flesh) and the verb δικαιόω (justify) and it is maintained that a consistent literal rendering (of for instance 'body', 'flesh', 'justify') is unnatural if not actually misleading. This time the American Standard Version (ASV) of 1901 (precursor of the RSV) is contrasted with the NEB and TEV:

1. Luke 24:39

ASV	a spirit hath not flesh and bones
NEB	no ghost has flesh and bones
TEV	a ghost doesn't have flesh and bones

2. 2 Cor 7:5

ASV	our flesh has no relief
NEB	there was no relief for this poor body of ours
TEV	we did not have any rest

3. Rom 11:14

ASV	provoke to jealousy them that are my flesh
NEB	to stir emulation in the men of my own race
TEV	make the people of my own race jealous

4. Acts 2:17

ASV pour out my Spirit on all flesh
NEB pour out upon everyone a portion of my Spirit
TEV pour out my Spirit upon all men

5. Rom 8:3

ASV what the law could not do, in that it was weak through the flesh, God...
NEB what the law could never do, because our lower nature robbed it of its potency, God has done
TEV what the Law could not do, because human nature was weak, God did

6. 2 Cor 10:13

ASV for though we walk in the flesh, we do not war according to the flesh
NEB weak men we may be, but it is not as such that we fight our battles
TEV it is true we live in the world; but we do not fight from worldly motives

7. 1 Cor 1:26

ASV not many wise after the flesh
NEB few of you are men of wisdom by human standard
TEV few of you were wise..., from the human point of view

Only in Luke 24:39 is the Greek σάρξ seen to correspond with a current use of 'flesh' in English according to Nida, since for most persons, 'flesh' has only three meanings: (1) meat, e.g., from the butcher's (slightly obsolescent); (2) the flesh of a person, e.g., 'She has put on a lot of flesh'; (3) sex—an increasingly central meaning.

The third table provides a number of translations for δικαιόω (justify):

1. Matt 12:37

RSV for by your word you will be justified, and by your word you will be condemned
NEB for out of your own mouth you will be acquitted; out of your own mouth you will be condemned
TEV for your own words will be used to judge you, either to declare you innocent or to declare you guilty

2. Luke 7:29

RSV all the people and tax-collectors justified God
NEB all the people, including the tax-gatherers praised God
TEV all the people and tax collectors hear him; they were the ones who had obeyed God's righteous demands

3. Luke 16:15

RSV you are those who justify yourselves before men
NEB you are the people who impress your fellowmen with your righteousness
TEV you are the ones who make yourselves look right in men's sight

4. Rom 3:4

RSV that thou mayest be justified in thy words
NEB when thou speakest thou shalt be vindicated
TEV you must be shown to be right when you speak

5. Rom 3:24

RSV they are justified by his grace as a gift
NEB all are justified by God's free grace alone
TEV by the free gift of God's grace they are all put right with him

Concordant translation of δικαιόω by 'justify' is said to be quite misleading. Not only does it not do justice to the range of meanings in the Greek term, but also fails to recognize the quite different senses in current English usage. In present day English it has four meanings in popular usage. Thus one might say, 'He was justified in doing that' implying that despite appearances to the contrary, he was right. Secondly 'He is always justifying what he is doing' implies that what he is doing is wrong but he feels constrained to make it look right. Thirdly one may speak of 'justifying two different columns of type' thus making them the same length (hardly popular usage one would think). Lastly, another, but very limited usage is found in the expression 'He justified his existence' i.e., he did something worthwhile to vindicate his presence. However, none of these four modern meanings are seen to be appropriate for the translation of the passages chosen above.

That concordance in translation may involve serious distortions of meaning is argued not only from practical examples but also from two linguistic axioms:

1. Each language covers the totality of experience with symbols.
2. Each language has its own system of symbolizing meaning.

Both points are elaborated. Thus language is much more complex than a single 'map' of experience, for this segmenting of experience is several layers deep. Thus one may refer to a certain household pet as a 'terrier', a 'dog', a 'mammal' or an 'animal'. Thus a diagram of the way in which language segments the total experience of its speech community would need various levels, each carefully segmented into larger and larger sections with intricate patterns of inclusion and exclusion. A later chapter on Referential Meaning includes a further section on Hierarchical Relationships Between

Meanings of Words.[29] The whole subject is one that gets more specialist treatment from other semanticists (e.g. Lyons[30]).

With regard to the second axiom Nida maintains that languages not only possess distinctive ways of segmenting their most concrete, specific layer of existence, but they also have very different ways of distinguishing the classes in the upper levels, and that:

> languages tend to be more alike on the specific concrete level and increasingly different on the higher levels. This is true because the distinctions made on the lower levels depend primarily on 'perception' (the shape and size of things) while the upper layers of classification depend essentially upon 'conception' (the way people think about objects, events and qualities). In other words each language classifies certain qualities which they share, while features in which they differ are ignored as incidental. But which features are crucial and which are incidental is basically a matter of arbitrary choice within each language and culture.[31]

2. The priority of dynamic equivalence over formal correspondence

This second priority stresses that the DE model looks at translation in terms of the receptor and his understanding. Intelligibility, however, is not measured merely in terms of whether the words are understandable and the sentences grammatically constructed, but in terms of the total impact the message has on the receptor. It will be useful to reproduce Nida's two diagrams distinguishing his DE model from the traditional view. Figure 1 represents the way in which translations were judged traditionally:

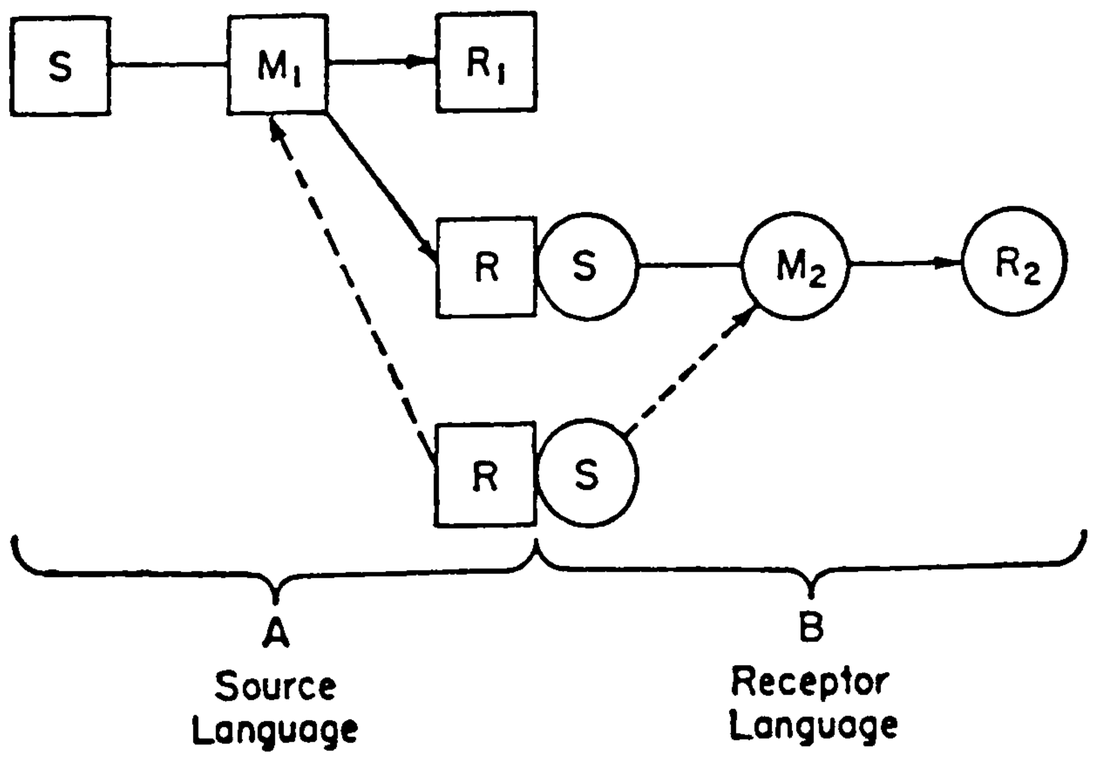

Figure 1

---

29 E.A. Nida and C.R. Taber, *The Theory and Practice of Translation* , (Helps for Translators, No.8; Leiden: Brill, 1969) 68.

30 J.Lyons, *Introduction to Theoretical Linguistics* (Cambridge: Cambridge University Press,1968) 456f.

31 E.A. Nida and C.R. Taber, *The Theory and Practice of Translation*, (Helps for Translators, No.8; Leiden: Brill, 1969) 21.

> The first box represents the source (S), who communicates the message (M1), which is received by the original receptor (R1). The translator, who is both receptor and source, first receives M1 as if he were an R1, and then produces in a totally different historical cultural context a new message (M2) which he hopes will be understood by the final receptor (R2). The differences between the two languages and the two cultural settings are represented by the different shapes. The squares represent the source language factors and the circles represent the receptor language factors. Both the translator and the scholarly judge of the translation combine both types and factors. In the past critical examination of a translation was usually carried out by someone who simply examined the two messages (M1 and M2) and compared their formal and meaningful structures and on the basis of this decided whether the translation was 'faithful'.[32]

Nida points out that there is a built in problem in the traditional approach—the scholars involved are often so familiar with the source text (M1) that they almost instinctively evaluate the form of M2 in terms of what they already know about M1. This was certainly the case as we have acknowledged with the ERV (1881) and its American counterpart the ASV (1901), both of which were acclaimed as landmarks of biblical scholarship at the time but which were found to be less intelligible than the three centuries old Authorized Version (KJV) they were supposed to update. In Nida's theory any evaluation of a translation must involve a comparison of the 'real or presumed comprehension of M1 by R1 with the comprehension of M2 by the average receptor , R2'[33] as diagrammatically represented in Figure 2.

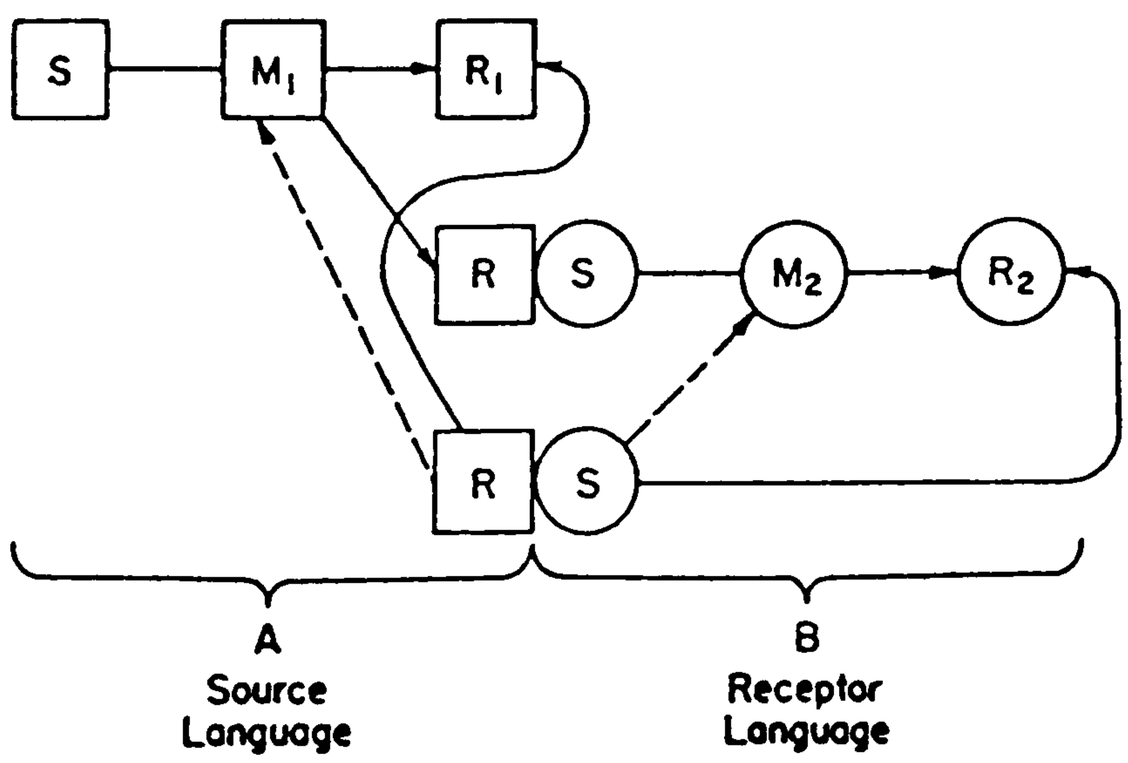

Figure 2

---

32 E.A. Nida and C.R. Taber, *The Theory and Practice of Translation*, (Helps for Translators, No.8; Leiden: Brill, 1969) 22-23.

33 E.A. Nida and C.R. Taber, *The Theory and Practice of Translation*, (Helps for Translators, No.8; Leiden: Brill, 1969) 23.

'The first message (M1) was designed not for the bilingual person (the translator-critic) but for the monolingual R1 and it is this comprehension of M2 by R2 which must ultimately serve as the criterion of correctness and adequacy of M2.'

In his more popularly written apologia for the TEV, *Good News for Everyone,* Nida states plainly:

> The principle of dynamic equivalence implies that the quality of a translation is in proportion to the reader's unawareness that he is reading a translation at all. This principle means, furthermore, that the translation should stimulate in the new reader essentially the same reaction to the text as the original author wished to produce in his first and immediate readers. The application of this principle of dynamic equivalence leads to far greater faithfulness in translation, since accuracy in translating cannot be reckoned merely in terms of corresponding words but on the basis of what the new readers actually understand.[34]

No doubt anticipating the obvious criticism of this receptor-oriented approach, Nida provides a footnote in TAPOT.[35]

> We must assume that there is at least some basic relationship between the intention of the source and the response of the first receptors. Otherwise, of course, the communication has utterly failed. But in general we can assume that the source had in mind the backgrounds of his receptors and prepared his message in such a way as to obtain the highest degree of comprehension.

We shall simply note at this stage Nida's optimism. The question of the response of the original receptors is, to say the least, problematical.

It is at this point that the functions of language are dealt with.[36] Communication is not only *informative*, it must also be *expressive* and *imperative*. This assumption of three functions of language would seem to have been taken over from Karl Bühler's[37] formulation of the functions of language as symbol, symptom and signal. Be that as it may, Nida is emphatic that the translator of the Bible must not only provide intelligible information but the receptor must be made to feel its relevance (the expressive function) so that he can respond to it (the imperative function) in the same way as the original receptors are assumed to have responded.

---

34 E.A.Nida, *Good News for Everyone: How to Use the Good News Bible* (Waco, Texas; Word Books 1977) 13.

35 E.A. Nida and C.R. Taber, *The Theory and Practice of Translation*, (Helps for Translators, No.8; Leiden: Brill, 1969) 23.

36 E.A. Nida and C.R. Taber, *The Theory and Practice of Translation*, (Helps for Translators, No.8; Leiden: Brill, 1969) 24-26.

37 K. Bühler, *Sprachtheorie* (Stuttgart: Fischer, 1934)

Nida's remaining two priorities have more the nature of practical recommendations that are consistent with the central emphasis of DE theory on receptor response:

3. The heard form of the language has priority over the written form.[38] It assumes that many more people will hear the Scriptures read aloud than will read them for themselves (as in liturgical use, group instruction, the habit of reading aloud in some non-Western cultures, use on radio and television). Potential problems of hearers must be anticipated. For instance, one cannot rely on capitalization or correct spelling to obviate misunderstanding—Nida's favourite example is 1 Chr 25:1. The RSV read 'prophesy with lyres' but an audience usually hears the more familiar 'liars'. Sometimes, too, the text has unintentional puns or terms which, if pronounced, become vulgar, e.g. 'ass' in American English.

4. The forms understood and accepted by the receptor have priority over the forms which may possess a longer linguistic tradition or have greater literary prestige.

Two sets of situations are rightly distinguished:

a) The language which has a long literary tradition which includes the Scriptures.

b) The language which has no such tradition and in which the Scriptures are unknown or only recently introduced.

Nida argues that the first situation requires three types of translation: an 'ecclesiastical' translation reflecting traditional usage and largely for liturgical purposes; a modern literary translation for the educated; and a common language translation. Nida's colleague, Dr W.L. Wonderly, has defined 'common language' as 'that part of the total resources of a given language common to the usage of both educated and uneducated'.[39] Nida says it probably constitutes the form of language used by 75% of people more than 75% of the time.[40] This is to be distinguished from 'Basic English', an artificial language.[41] These three types of translation, then, would represent different registers, to use Catford's terminology.

In the second situation, which has no literary tradition and no revered translation of the Bible, then the oral form of speech used in formal discourse becomes normative. But in addition the type of audience must be considered and the following criteria are recommended:

---

38 E.A. Nida and C.R. Taber, *The Theory and Practice of Translation*, (Helps for Translators, No.8; Leiden: Brill, 1969) 28-31.

39 W.Wonderly, *Bible Translation for Popular Use*, (Helps for Translators, No.7) (London: United Bible Societies 1968) 3.

40 E.A. Nida, *Good News for Everyone* (Waco, TX: Word Books1977) 12

41 P.Ellingworth, 'Talking about Translations', *TBT* 23 (1972), 219-24.

i. The translation must be intelligible to non-Christians not only to aid evangelism but also to keep the language of the church from becoming an esoteric dialect.

ii. In view of rapid social change the use of language by persons 25-30 years of age has priority over the language of the older people and children.

iii. In certain situations the speech of women should have priority over the speech of men. Men have broader linguistic contacts (e.g. through work in mines or plantations) and their speech indicates the direction in which the language is likely to change. But poor comprehension by the women would also have significant repercussion in the instruction of the children. Some languages have specific forms used by women (e.g. Japanese). These need to be observed when the Scriptures report the words of women.

These are all instructive strategies reflecting Nida's concern for successful communication.

C. SOME ISSUES

There are a number of issues which arise from Nida's exposition which involve not only a theory of translation but also a philosophy of language itself. We have noted in passing the apparent influence of Karl Bühler's three functions of language on Nida's theory. In Bühler's formulation *Symbol* is information-object-centred, representational, intentional, referential—one could say cognitive meaning. *Symptom* is self-expression—the subjective source-centred element. *Signal* is persuasion—recipient-centred, impressive, an appeal or summons. Bühler's analysis of the functions of language seem to have had considerable influence on many translation theorists, an influence which according to Halliday was mediated through the Prague linguists such as Vachek who developed Bühler's ideas, especially in the study of grammar.

However, it needs to be pointed out that discussions of functions of language are coloured by basic presuppositions and not by empirical evidence alone. Thus Halliday[42] seeks to look at both the system of language and its function at the same time in order to provide a theoretical basis for generalizations about how language is used. He proposed that language has firstly an *ideational* function[43] in which 'content' is expressed—content of one's experience of the world, including the world of one's own consciousness. This does not seem very different from Bühler's Symbol

---

42 M.A.K. Halliday 'Some Notes on "Deep Grammar"' *Journal of Linguistics* 2 (1966), 57-68

43 cf. J.R. Firth, *Selected Papers 1952-1959* (ed. F.R. Palmer; London: Longmans, 1968) 91.

and Nida's Informative function. Secondly, language has an *interpersonal* function in which social relations are established, expressed and maintained. Thirdly, he sees a *textual* function of language by which links are provided with itself and with features of the situation in which it is used. Halliday's analysis of this particular function of language provides some significant insights for translators, especially in the areas of discourse analysis.[44]

The subjectivity and fluidity in analysis of functions is illustrated in Nida himself, who in a later article[45] speaks of five basic functions of communication:

1. Expressive, in which the focus is upon the source
2. Informative, where there is an attempt to influence the cognitive state of the receptor
3. Imperative, which seeks to elicit a behavioural response
4. Emotive, which aims to cause a pleasurable or painful reaction in the receptor
5. Phatic, which serves primarily to link source and receptor by means of a minimum of transfer of content.

Nevertheless reflection on the functions of the language in a text is important for translation. For instance a literal translation of formalized greetings could be disastrous. Greetings such as 'How are you?' are nothing more than phatic communications. Translated literally in some cultures they could be regarded as being indicative of evil intent. Similarly 'Good morning' might seem inane. I am reminded of an East German colleague who used to get furious at the invasion of his privacy by Javanese neighbours who called out *'Mau kemana?'* ('Where are you going?') He could not accept that this was just a conventional greeting and that no real information about his movements was being sought.

In non-written communication the various functions of language may be clarified by paralinguistic and extra-linguistic features—voice quality (e.g. to indicate irony), stance, gestures, eye contact. However, written communications do not necessarily suffer the deprivation people assume. Features such as orthographic correctness, clarity of format, appropriateness of stationery (e.g. love letters), colour of ink, hand-writing can all be significant.[46]

It is beyond the scope of this thesis and the competence of the writer to delineate a theory of language or to suggest a definitive list of its functions. But those mentioned

---

44 M.A.K. Halliday and R. Hasan, *Cohesion in English* (London: Longmans 1976).
45 E.A. Nida, 'The Nature of Dynamic Equivalence in Translating', *Babel* Vol.23:3 (1977).
46 E.A. Nida, 'The Nature of Dynamic Equivalence in Translating', *Babel* Vol.23:3 (1977) 220.

so far have not exhausted the possibilities. Language can also function as a means of intellectual calculation (when we argue our way through a problem), and as imagination.[47] The point is that the functions of language highlighted by a particular theorist reflect his basic presuppositions about language (and ultimately about reality). In Western societies there is considerable emphasis on the descriptive or representational aspect of language—'Language is the communication of information' or 'Language is the means of transferring one's ideas to another.'

Nida himself developed his views in a milieu where the stimulus-response explanation of Bloomfield[48] was dominant. Could this account for his own stress on the instrumental function whereby language is a means of inducing a response in the hearer?

Another key issue that arises from these first two chapters of TAPOT is the relationship between Form and Meaning. 'To preserve the content of the message, the form must be changed'[49] seems a reasonable dictum at first glance. But apart from Nida's unconvincing example in Mark 1:4 which we shall consider later, his subsequent elaboration seems to suggest there are such things as disembodied meanings which can be found without their verbal clothes. Deep philosophical questions are involved which we cannot enter into, but at least one can register unease if the complexity of language does not seem to be adequately represented. We shall return to this issue in Chapter Eight.

Nida's comments on the languages of the biblical text coincide with what has already been acknowledged above (see Chapter Four) but his assumption that the NT writers were so concerned to be understood that they used the simple, natural, vernacular of the market place invites further investigation which will be found in Chapter Twelve.

Similarly, the argument for the priority of contextual consistency over verbal concordance makes sense but needs to be balanced by the recognition of certain other factors: in most major languages such as English, religious terms or religious senses of common terms have become part of the heritage of the language and cannot be dismissed as Anglicized Latin. Furthermore, the NT writers did use technical terminology which had a long history of usage in the OT and in the community of Faith. One could argue that contextual consistency in the sense of faithfulness to the

---

47 C.Yallop, 'Communication Through Language', unpublished paper delivered at Focus Conference,1980:2.

48 L. Bloomfield, *Language* (New York: Holt,1933).

49 E.A. Nida and C.R. Taber, *The Theory and Practice of Translation*, (Helps for Translators, No.8; Leiden: Brill, 1969) 5.

context of the biblical corpus as a whole demands concordant translation of such technical terminology (e.g. Temple, Kingdom, Covenant, Exodus vocabulary). Context must not be limited to the sentence. Nor should terms which had such a key role in the universe of discourse of the NT writers, be equated with Nida's examples 'bar' and 'chair' that have so many meanings that they could not be rendered by a single term in another language. This topic will get more specialized treatment in Chapter Thirteen.

Finally, we shall need to examine more closely the whole notion of DE and the determinative role given to the understanding of the receptor. To what extent is the DE model appropriate for Bible translation?

CHAPTER SIX

NIDA'S GRAMMATICAL ANALYSIS

A. THE PROCESSES OF GRAMMATICAL ANALYSIS

There are basically two different systems for translating. The first consists in setting up a series of rules prescribing what should be done with each item or combination of items in the SL so as to select the appropriate form in the RL. Proponents of this first approach sometimes utilize an intermediate, neutral, universal linguistic structure (either another natural language or a completely artificial one), but whether or not such a go-between language is used, the rules are applied to the 'surface structure' of the language, that is, the level of structure which is overtly spoken and heard, or written and read.[1]

Developments in linguistic science (especially TG grammar) have proceeded to develop new techniques in grammatical and semantic analysis which probe beneath the surface structure and make possible another approach to translation which Nida seeks to utilize. Quite independently of work by Harris and Chomsky, Nida[2] had already employed a system of back transformations as an analytical procedure in determining the grammatical relations of complex structures. For Nida the shift in focus from preoccupation with textual differences to language potentialities (reflected in the production and interpretation of 'new expressions' based on the 'rules' of an internalized structure) meant that translation could be formulated in terms of a set of procedures involving the kernel and/or deep structures. Instead of determining equivalence on the level of surface structure one could: (a) employ back transformations to the levels of the kernels and/or deep structure; (b) make the transfer from the source to the receptor language at the requisite level, and (c) by forward transformation reproduce the closest natural equivalent in the RL.[3]

The first procedure in DE translation, therefore, is that of *Analysis*, in which the surface structure (i.e. the message as given in the SL) is analysed in terms of: (a) the grammatical relationship and (b) the meanings of the words and combinations of words. TAPOT devotes three chapters to this stage of the translation process.

---

1 E.A. Nida and C.R. Taber, *The Theory and Practice of Translation*, (Helps for Translators, No.8; Leiden: Brill, 1969) 33.

2 E.A. Nida, 'A New Methodology in Biblical Exegesis', *TBT* 3:3 (1952) 97-111.

3 E. A. Nida, 'Translation', *Current Trends in Linguistics Vol.12* (ed. T Sebeok; The Hague: Mouton, 1974) 948-1049.

Grammatical Analysis is dealt with in Chapter 3, the analysis of Referential Meaning in Chapter 4 and the Connotative Meaning in Chapter 5.

The second stage in DE translation is *Transfer*, in which the analysed material is transferred in the mind of the translator from language A to language B. Chapter 6 of TAPOT expounds this process. The third stage is *Restructuring*. Chapter 7 explains how the transferred material is restructured in order to make the final message fully acceptable in the RL.

We turn now to the processes of *Grammatical Analysis*. TAPOT again is our basic source, but where there is relevant material in other articles (especially more recent ones) these may be cited. The first point made is that grammar has meaning. When one thinks of meaning it is usually in terms of words or idioms, but Nida used the poem 'Jabberwocky' in *Through the Looking Glass* to make his point:

'Twas brillig, and the slithy toves
Did gyre and gimble in the wabe:
All mimsy were the borogoves,
And the mome raths outgrabe.

> Almost immediately we can decide what the grammatical classes of the meaningless words probably are: e.g. *brillig*, *slithy* (adjectives), *toves* (noun), *gyre*, *outgrabe* and *gimble* (verbs). Moreover, we can readily make up some further sentences, such as (1) *the toves were slithy*; (2) *the toves were in the wabe;* (3) *toves can gyre and gimble*; (4) *Gyring and gimbling take place in the wabe*; (5) *the wabe is a place*; (6) *the borogoves are mimsy*; and (7) *the raths are mome*. Even from the grammar itself we can make some highly probably guesses about the referential meaning of some of these terms; (1) *brillig* either characterizes a general quality of the circumstances in which the *toves gyre and gimble*, or it expresses the general time of the actions; (2) *toves* are objects (perhaps animate) which can engage in some type of action; (3) *wabe* is a place in which actions can take place; (4) *mimsy* is a quality with various degrees; (5) the *borogoves* are objects which can participate in an event such as *outgribing*; and (7) the *raths* are objects which have a quality such as *mome*. Of course, it would be possible to assign to these nonsense terms in the Jabberwocky poem such meanings as would make such deductions untenable, but if we accept the "meaning" of the various forms used in this poem in terms of their highest probabilities of usage, then the deductions which we have made are not unfounded, for the grammatical markers, such as *'twas*, *and*, *the*, *did*, *in*, *all*, *were*, *-s*, all provide the necessary clues.[4]

The claim that grammar carries meaning would be disputed by some linguists. The issue is not important for our purposes. The main point for translation theory is that languages differ in grammar. Nida goes on to introduce two key concepts in his grammatical analysis, that of 'basic semantic categories' and 'basic kernels'.

---

4 E.A. Nida and C.R. Taber, *The Theory and Practice of Translation*, (Helps for Translators, No.8; Leiden: Brill, 1969) 34-35.

He proposes that there are four basic semantic categories, 'object', 'event', 'abstract' and 'relation' and that these are universal. These semantic categories often coincide with the traditional grammatical classes. For instance, objects are most typically expressed by nouns or pronouns, events by verbs, and abstracts by adjectives and adverbs. However, these traditional definitions are held to be inadequate because most languages provide ways of shifting the class membership of terms, e.g. events can be expressed by nouns.[5]

Moreover, one of the most important insights of Transformational Grammar (TG), according to Nida, is the fact that in all languages there are about six to twelve basic structures or kernels out of which all the more elaborate formations are constructed by means of transformations. Even more importantly, he claims that languages agree far more on the level of the kernel than on the level of the more elaborate structures.[6] Kernel is defined in the glossary as:

> A sentence pattern which is basic to the structure of a language and which is characterized by (a) the simplest possible form, in which OBJECTS are represented by NOUNS, EVENTS by VERBS, and ABSTRACTS by ADJECTIVES, ADVERBS or special verbs (according to the genius of the language) (b) the least ambiguous expression of all RELATIONS and (c) the EXPLICIT inclusion of all INFORMATION. Each language has only 6 -12 types of kernels. Kernels are discovered in a surface structure by BACK TRANSFORMATION: they are converted into a surface structure by TRANSFORMATION.[7]
>
> (The capitalized words cross-refer to other entries in the glossary)

We are told that there are seven kernel expressions in English which can be illustrated by the following sentences:

(1) John ran (quickly)
(2) John hit Bill
(3) John gave Bill a ball
(4) John is in the house
(5) John is sick
(6) John is a boy
(7) John is my father[8]

The process of back transforming expressions from the surface structure to the underlying kernel or core structures provides the basis for transfer into the RL, on a

---

5 E.A. Nida and C.R. Taber, *The Theory and Practice of Translation*, (Helps for Translators, No.8; Leiden: Brill, 1969) 37-38.

6 E.A. Nida and C.R. Taber, *The Theory and Practice of Translation*, (Helps for Translators, No.8; Leiden: Brill, 1969) 39.

7 E.A. Nida and C.R. Taber, *The Theory and Practice of Translation*, (Helps for Translators, No.8; Leiden: Brill, 1969) 204.

8 E.A. Nida and C.R. Taber, *The Theory and Practice of Translation*, (Helps for Translators, No.8; Leiden: Brill, 1969) 40.

level at which the relationship between the constituent parts is expressed in the least ambiguous manner. The classification of any linguistic unit as object, event, abstract, or relation depends entirely upon the way in which the unit functions within a particular context. For example 'stone' is an object in 'Bill threw a stone at him' or an event in 'They will stone him' and an abstract in the expression 'He is stone deaf'.

But words sometimes function as more than one semantic category. For example 'dancer' may be described as both object and event—'one who dances' in which the object participates as the actor of the event. The term 'apostle' also has two elements—object (the person) and an event (being sent); but the relationship is of goal to actions, i.e. 'one who is sent'. In many languages it is important to distinguish clearly between such related structural elements. In English, the expression 'she is a good dancer' refers to the quality of her dancing, not her character. Hence the backward transformation of 'good dancer' is 'she dances well'; but in some languages such an adjective attributive to the noun might be attributive to the object component, not the event component, of the semantically complex substantive. Nida's favourite example of this type of analysis applied to a biblical phrase is Mark 1:4.[9]

> "*John...preached the baptism of repentance unto the forgiveness of sins.*" Such a sentence becomes especially difficult to translate in a language which does not have nouns for such terms as *baptism*, *repentance*, *forgiveness* or *sins*. In fact in a high percentage of languages these words correspond regularly to verbs, not to nouns, for they represent events, not objects. A series of kernels or core sentences for this structure could consist of the following: (1) *John preaches (the message) (to the people)*; (2) *John baptized (the people)*; (3) *the people repented of (their) sins;* (4) *God forgave (the people) (their) sins*, and (5) *(the people) sinned.* Certain features of this series should be noted. First there are two implied elements which need to be made explicit, e.g. *the people* and *God*. Second, some of these implied elements in these near-kernel structures include embedded kernel e.g. *their sins* may be further back-transformed to *they sin*. Third, an element such as *message* is a substitute for the series of kernels 2 through 5. A translator, however, cannot employ a mere string of kernels or core sentences as a basis for transfer into a receptor language. He must have these kernels related meaningfully to one another. This means that he must back up from a strictly kernel level and analyze the relationship between the kernels. Analysis of the Greek text underlying this sentence in Mark 1:4 reveals the following sets of relationships: (1) the goal of *preached* is the series of kernels 2-5; (2) kernels 2 and 3 are merely co-ordinate events which occur in an historical order in which 3 precedes 2, i.e. *baptism of repentance* is a nominal transform of the verb expression *repent* and *be baptized;* (3) kernel 5 is the goal of the event in kernel 4; and (4) kernel 4 and 5 are the purpose (or result) of the combined events of kernels 2 and 3. A possible combination of kernels which might be adequate for transfer to some receptor

---

9 E.A. Nida and C.R. Taber, *The Theory and Practice of Translation*, (Helps for Translators, No.8; Leiden: Brill, 1969) 51-52. E.A. Nida, *Language Structure and Translation* (Stanford: Stanford University Press, 1975) 82-83. E.A. Nida, 'The Nature of Dynamic Equivalence in Translating', *Babel* Vol.23:3 (1977) 99-102

> languages could be formulated as: *John preached that the people should repent and be baptized so that God would forgive the evil they had done.* In instances in which a form of direct address is a preferred base for transfer, one might have: *John preached "Repent and be baptized so that God will forgive the evil you have done".*[10]

If one were in any doubt as to the influence of Eugene Nida in world wide Bible translating, one would only have to compare the translation of Mark 1:4 in pre-1970 and post-1970 versions (e.g. in the English, German, Dutch, French, Spanish, Indonesian, Malay).

However two simple objections to this kind of restructuring can be raised. Firstly, New Testament Greek was itself quite capable of expressing itself along lines recommended by Nida had that been the writer's intention and in fact does so elsewhere (see Acts 2:38). Secondly, granted that some languages may demand such a restructuring (and even require the passive to be expressed by an active), neither English nor Bahasa Indonesia does.

Nevertheless, as an analytical procedure Nida's model is potentially useful as we see from this table analysing Greek genitival constructions that are usually retained in the traditional FC translation.[11]

	Phrases with 'of '		Kernels in English
1.	the will of God God wills (K1)	1.	John ran quickly
2.	the foundation of the world (God) creates the world	2.	John hit Bill
3.	the Holy Spirit of promise (God) promised the Holy Spirit (K2) *or* (God) promised (the people) the Holy Spirit (K3)	3.	John gave Bill a ball

---

10 E.A. Nida, *Language Structure and Translation,* (Stanford: Stanford University Press, 1975) 82-83.

11 E.A. Nida and C.R. Taber, *The Theory and Practice of Translation,* (Helps for Translators, No.8; Leiden: Brill, 1969) 43-44.

4.	the word of truth the word is true (K5)	4. John is in the house
5.	the riches of his grace he shows grace richly (K1)	5. John is sick
6.	Jesus of Nazareth Jesus comes from Nazareth (K4)	6. John is a boy
7.	the lake of Galilee the lake is in Galilee (K4)	7. John is my father
8.	the land of Judea the land is Judea (K7)	
9.	one of the soldiers he was a soldier (K6)	

However, this analysis also has debatable elements. For instance one could argue that the phrase 'the will of God' (Eph.1:1) is an example of kernel no.2 rather than no.1 since 'will' is transitive. Again the Greek phrase τῷ πνεύματι τῆς ἐπαγγελίας translated literally 'the Holy Spirit of Promise' (Eph.1:13) has two possible interpretations, viz. (i) 'the promised Holy Spirit' (as assumed by Nida) or (ii) 'the Holy Spirit who promises'. Perhaps the NT writer even intended the double entendre. But both exegetical possibilities can only be preserved in an FC translation. DE theory forces the translator to select one and close the options.

Elsewhere Nida points out that the works of Fillmore, Halliday and Langendoen provide more sophisticated instruments for describing the relations between the event and the participants in the event, than supplied by TAPOT.[12] TAPOT anticipates the query 'Why not go beyond the level of the kernels to the underlying bases, the deep structures?' and adds an explanatory footnote:

> There are certain theoretical interests in such an approach; but practically, the bases are neither useful nor advisable, since these bases cannot be readily manipulated. When the message is transferred, it is not, however, on precisely the kernel level, for if this were the case, the connection between the kernel elements would be lost or obscured. Therefore the

---

12 E.A. Nida, *Language Structure and Translation*, (Stanford: Stanford University Press, 1975) 83.

> transfer is made at a near-kernel level in which the relevant connections between the kernels are explicitly marked.[13]

The term 'near-kernel' used in the above note refers to the string of intuitively connected kernels.

The translation process then, consists of: (1) word categorization according to the four universal categories; (2) back transformation to form the individual kernels; (3) concatenation (to string them together into a near-kernel); (4) transformation (to translate the near-kernel into the RL).

Pages 51 to 55 of TAPOT provide a number of NT passages on which the reader can try out the five operations recommended:

1. Identify the basic role of each word: object, event, abstract or relational
2. Identify any implied structural elements
3. List the basic kernels of the passage
4. Group the kernels into meaningful sets showing the relationship between the kernels
5. Restate the passage in such a form as will lead to the best and easiest transfer.

B. SOME ISSUES

The central problem in the theory and practice of translation is to specify the nature and conditions of translation equivalence in respect of two pieces of language.[14] Clearly what counts as equivalence will be influenced by the model of linguistic description which is being used in the translation process. Nida's quasi-Chomskyan model probes beneath the surface structure of sentences and therefore rather than achieving a mere structural equivalence seeks a genuine semantic equivalence by relating different surface forms to a common deep structure. But what criteria should we select for determining equivalence? Perhaps his analytic model could specify more clearly the different kinds of equivalence that are possible. For instance, Widdowson has called attention to what he calls 'pragmatic equivalence' which has to do with the illocutionary effect of utterances.[15] Catford stresses interchangeability in the same situation[16]. Newman's semantic mapping has focused on the dimension of interpretative potentialities[17].

---

13 E.A. Nida and C.R. Taber, *The Theory and Practice of Translation*, (Helps for Translators, No.8; Leiden: Brill, 1969) 34-40. cf. E.A. Nida, *Language Structure and Translation*, (Stanford: Stanford University Press, 1975) 83-85.

14 J.C. Catford, *A Linguistic Theory of Translation* (London: Oxford University Press, 1965) 21

15 H.Widdowson, *Explorations in Applied Linguistics* (Oxford: Oxford University Press, 1979)

16 J.C. Catford, *A Linguistic Theory of Translation* (London: Oxford University Press, 1965)

17 A. Newman 'Semantic Mapping of a Text (Exodus 23:8)' *Meta* 23:2 (1978) 158-64.

It is not the purpose of this thesis to focus on Nida's Grammatical Analysis but **any claim to have discovered the four universal semantic categories and the seven primitive English kernels is surely questionable.** Thus Margaret Masterman has argued on logical rather than grammatical grounds that there are here only four types of kernels as the first three sentences are all examples of an N—relational predicate.[18] On the other hand a syntactic approach could show that sentences 4, 5, 6 and 7 are the same and that the differences are semantic, not grammatical. Nida's co-author, Charles Taber, has subsequently suggested that there are eight basic kernels in English not seven.[19] While retaining the four universal semantic categories he changes the terminology. The new terms are 'entities', 'actions/processes', 'quality/quantity', and 'relations'. Certainly the use of 'object' in TAPOT would be misleading for many readers because of its use in traditional grammar.

Nida's methods are useful tools for analysis and reflection on the grammar of the SL, but, as we have seen, the subjective elements in the process have certainly been underestimated. Moreover, the impression given by TAPOT is that the near-kernel expressed in English can be regarded as interlingual. But if one is uneasy of an approach which speaks so confidently of the four universal semantic categories and the seven primitive English kernels, perhaps one needs to recall that TAPOT is a manual for translators. This helps us to understand, if not excuse, the sweeping claims made. In later publications Nida is more cautious and typically pragmatic:

> Description of language structure will always be more significant if one bears constantly in mind the limitations of the model being employed...Our choice of models, however, must be dictated essentially by their practical usefulness and their explanatory power. For these ends, transformational techniques (both backward and forward) seem to be more satisfactory than any other existing system provided we combine adequate treatments of case relations and of discourse units and structures. First, the procedures are intuitively comprehensible to most speakers, and various stages are readily manipulable. Second, within the kernel structures the relationships between the component parts are more clearly marked. Third, the kernel structures of different languages are surprisingly similar, so that transfer may be effected with the least skewing of the content.[20]

---

18 M. Masterman, 'Bible Translation by Kernel', *Times Literary Supplement*, (19 March 1970) 300.
19 C. Taber, 'Translation as Interpretation', *Interpretation* 32:2 (1978) 142.
20 E.A. Nida, *Language Structure and Translation*, (Stanford: Stanford University Press, 1975) 86

CHAPTER SEVEN

SEMANTIC ANALYSIS

A. PROCESSES OF SEMANTIC ANALYSIS

Regardless of whether semantics is to be treated as part of deep structure as in G-T grammar, or as the top stratum as in stratificational grammar, Nida sees the emphasis on meaning (as an integral part of language and an essential component in any analysis of structure) to be of immense importance for translation theory. In particular Componential Analysis of semantic structures, stimulated by Katz and Fodor's application of a G-T model to the structure of meaning and by Lounsbury's studies of kinship systems, became an essential element in his translation theory and is reflected in the chapters in TAPOT on Referential Meaning and Connotative Meaning.[21]

Most studies in semantics concentrate on the ambiguities of language but Nida rightly emphasises how remarkably few they are, especially on the discourse level. With a mere 25 000 or so lexical units people can communicate with each other about millions of topics. This means that these lexical units have relatively large potential domains which can be efficiently delimited by the context to signal precise meanings.

1. The Marking of Meaning

Meaning is marked by: (1) syntactic structure as in, e.g. 'She drank the water' vs 'She will water the plants' and by (2) semotactic structure as in e.g.

a. The man runs
b. The water runs into the tub
c. The motor runs well
d. The vine runs along the fence
e. The bus runs between New York and Albany

In these sentences five different meanings are marked by certain semantically definable classes of co-occurring words. Note, however, that one cannot assume the same extensions of meaning in other languages. French, for example, cannot say: 'a motor runs'. Rather 'it walks' (*Le moteur marche*). In Telugu (South India) 'it plays'.[22]

---

21 J.J. Katz and J.A. Fodor, 'The Structure of a Semantic Theory', *Language* 39 (1963) 170-210. E.A. Nida *Exploring Semantic Structures* , (Munich: Fink Verlag 1975) 1052

22 This example was supplied by my colleague Dr Vasant Kumar in 1979.

The five sentences above, all exhibit intransitive uses of 'run'. When 'run' is used as a transitive verb it is causative and Nida provides an interesting set of correspondences.[23]

a. He ran the animal in the last race (i.e. he caused the animal to run)
b. She ran the water into the tub (i.e. the water did the running)
c. He ran the business well (i.e. he caused the business to run efficiently)
d. He ran the vine over the trellis (i.e. he caused the vine to grow over the trellis)

If, then, these uses of 'run' are added to the original five, we introduce the syntactic structure transitive/intransitive as a marker of meaning in addition to the semotactic structure which distinguishes the meanings of the first five sentences. With regard to those five intransitive sentences Nida analyses out five different meanings of 'run':

a. pedal action of an inanimate being involving relatively fast movement in space
b. movement of a mass
c. internal action of a mechanism
d. action or position of something capable of extension
e. habitual movement

These five different meanings are marked by certain semantically definable classes of co-occurring words.

2. The Analysis of Related Meanings of Different Words

For the translator, however, the analysis of related meanings of a single term is not as important as the analysis of the meanings of words having related or competing meanings.[24] The different meanings of single terms are less of a problem because they are actually further apart in semantic space, i.e. they share fewer components than do related meanings of different words. The translator must be able to distinguish between such sets as 'walk' and 'run', 'walk' and 'stroll', 'stroll' and 'amble'. They are terms which in certain of their meanings compete with each other for semantic space. Nida proposes that there are three different types of meaningful relationships: (i) *contiguous*, e.g. 'walk' and 'run'; (ii) *included*, e.g.'walk' and 'stroll' and (iii) *overlapping* e.g. 'stroll' and 'amble'. A fourth structure, *polar opposition*, describes such series as 'good/bad', 'tall/short' and 'generous/stingy'.

---

23 E.A. Nida and C.R. Taber, *The Theory and Practice of Translation*, (Helps for Translators, No.8; Leiden: Brill, 1969) 60

24 E.A. Nida and C.R. Taber, *The Theory and Practice of Translation*, (Helps for Translators, No.8; Leiden: Brill, 1969) 63 cf. E.A. Nida, 'Implications of Contemporary Linguistics for Biblical Scholarship', *JBL* 91 (1972) 85 and E.A. Nida *Language Structure and Translation* , (Stanford: Stanford University Press 1975) 88.

Such sets are analysed in terms of their minimal contrasting features. An example frequently cited by Nida is the set 'chair, stool, bench, hassock', all of which share the common components—'manufactured object' and 'for sitting'. With the aid of diagnostic components it is possible to contrast essential elements of meaning in these competing terms:

	chair	*stool*	*bench*	*hassock*
a.	with legs	with legs	with legs	without legs
b.	with back	without back	with/without back	without back
c.	for one person	for one person	for two or more persons	for one person

But what would be the status of a chair whose back was broken off? Would it become a stool?

3. The analysis of Related Meanings of a Single Word

Having analysed the componential structure of the related meanings of different words, Nida turns to the analysis of related meanings of a single word.[25] Again three basic types of components are distinguished: (i) common components, (ii) diagnostic components and (iii) supplementary or optional components. An appropriate warning is given that 'what is distinctive about a particular meaning may not be one or more components which it possesses exclusively but rather the particular assortment of configurations of components'.[26] Kinship sets with their cross-cutting components e.g. sex, lineality versus collaterality, and generations, are a good example as each term is defined by a unique combination of components.

The six techniques for determining the relevant components are:

1) Isolate and discard the universal component(s) since they are not distinctive
2) Isolate the components which occur in one or more but not all meanings
3) Arrange these components in parallel columns under each meaning making as much similarity and difference as is needed
4) Of the remaining components, reject for the moment supplementary components, i.e. those which can be excluded without destroying the meaning, and add to each column those which are necessary to define the meaning

---

25 E.A. Nida and C.R. Taber, *The Theory and Practice of Translation*, (Helps for Translators, No.8; Leiden: Brill, 1969) 77-87.

26 E.A. Nida and C.R. Taber, *The Theory and Practice of Translation*, (Helps for Translators, No.8; Leiden: Brill, 1969) 78.

5) Indicate the extent of parallelism or agreement between senses
6) Determine which components are distinctive, individually or collectively, for each meaning

In summary, it is claimed that this kind of componential analysis enables us to know why we can substitute certain terms in certain contexts but not in others. All can be clarified in terms of the components which the meanings share or do not share.

4. The Problem of Figurative Meaning

> The figurative sense of any term rests on the fact that it has an almost distinct set of components but that it also has a link to the primary sense through some one component, usually a supplementary one. This supplementary component can be actually relevant to the referent of the primary sense or only conventionally assigned, but in either case it is not one of the essential, distinctive features by which the primary sense is distinguished from others.[27]

This definition seems appropriate when Nida applies it to the single figurative use of 'fox' by Jesus in Luke 13:22 with reference to King Herod. The main components present in literal usage (viz. animal, canine, genus Vulpes) are not present here. The link is through a supplementary component—'cunning'—which is arbitrary, conventional and culture specific. In non-Western cultures this trait is assigned just as arbitrarily to other animals (e.g. rabbit or spider).

However, Nida's definition does not seem equally apt for other biblical idioms to which it is applied. For instance, frequently occurring terms such as 'flesh' and 'blood' seem to have figurative extensions of more central components. To preserve these figurative uses in translation may be unnatural to the receptor language but I doubt that they would ever be incomprehensible within the context of the biblical corpus. Similarly when Nida argues that 'circumcised' and 'uncircumcised' would be better translated literally 'Jews' and 'Gentiles' in Galatians[28] because the reference is to ethnic groups and not to a physical operation, he seems to miss the point that the whole letter is about circumcision. Paul is opposing those who argue that Gentile Christians need to be circumcised. 'Circumcision' like 'flesh' and 'blood' is a central concept in Scripture in both literal and figurative meanings and in that total context the meaning is never obscure.

---

27 E.A. Nida and C.R. Taber, *The Theory and Practice of Translation*, (Helps for Translators, No.8; Leiden: Brill, 1969) 88.

28 E.A. Nida and C.R. Taber, *The Theory and Practice of Translation*, (Helps for Translators, No.8; Leiden: Brill, 1969) 89.

Nida's contention that Semitic idioms such as 'sons of disobedience' (meaning people who disobey god), 'children of the bridechamber' (the bridal party), 'to close one's bowels' (to fail to be compassionate), need not be retained in translation, is unobjectionable. Unlike terms such as 'blood', 'circumcision', these idioms are incidental and do not contribute to the cohesion of the whole corpus.

5. Connotative Meaning (TAPOT Chapter 5)

The analysis of a SL text must not be limited to a study of syntactic relationships between linguistic units or to the referential (or denotative) meaning of these same units. The connotative (or emotive) values of the text must also be analysed.[29] This is crucial because DE translation seeks to attain equivalent emotional response on the part of the receptors.[30] Traditionally connotative meanings have been associated only with individual words or short phrases but it is pointed out that (1) pronunciation, (2) words, (3) the discourse (involving connotative reaction to the style of utterance), and (4) the themes of the message may all have associated meanings.[31]

Nida and Taber begin by mentioning examples of negative reactions to such words as the famous four letter words in English, which refer to certain body organs and functions:

> The fact that the taboo is against the word and not the referent can be seen from the fact that there are quite innocent scientific words which refer to the same things and which are perfectly acceptable. But the feeling against the words is such that even though everyone knows them, they are not used in polite society, and even many dictionaries refuse to print them. Such words are thought to defile the user.[32]

All societies have their 'vulgar language' as distinct from ordinary popular language. 'Vulgar language is a universal phenomenon'.[33]

Other examples of words with connotative meanings are given: for instance 'toilet' (in American English) which is replaced by euphemisms such as 'washroom', 'comfort station', 'lounge', 'powder room'; or 'garbage man' which is replaced by 'sanitary engineer' and 'undertaker' which is replaced by 'mortician'.

---

29 E.A. Nida and C.R. Taber, *The Theory and Practice of Translation*, (Helps for Translators, No.8; Leiden: Brill, 1969) 91 cf. E.A. Nida, *Toward a Science of Translating*, (Leiden: Brill, 1964) 70ff.

30 E.A. Nida and C.R. Taber, *The Theory and Practice of Translation*, (Helps for Translators, No.8; Leiden: Brill, 1969) 98.

31 E.A. Nida and C.R. Taber, *The Theory and Practice of Translation*, (Helps for Translators, No.8; Leiden: Brill, 1969) 96.

32 E.A. Nida and C.R. Taber, *The Theory and Practice of Translation*, (Helps for Translators, No.8; Leiden: Brill, 1969) 91.

33 E.A. Nida and C.R. Taber, *The Theory and Practice of Translation*, (Helps for Translators, No.8; Leiden: Brill, 1969) 91.

Connotative meaning is said to derive from three principal sources: (1) the speakers associated with the word; (2) the practical circumstances in which the word is used, and (3) the linguistic setting characteristic of the word.[34] Firstly, words acquire a connotative meaning closely related to our attitude towards their users. Words used primarily by children or in addressing children are not appropriate for adult usage. Similarly certain words become associated with certain classes. In British English much has been made of upper class (U) and non-upper class (non-U) speech.

Educational levels may also be involved so that educated persons use what is regarded as standard speech while others use 'substandard' words, pronunciation and grammar. Some words acquire special connotations through association with members of one sex. There are also regionalisms. In the Christian community, Nida points out, expressions such as 'the blood', 'the cross of Jesus Christ' and 'in the heavenlies' mark particular Christian constituencies (and one might add 'born again') just as surely as terms such as 'existential', 'dialogue', 'confrontation' mark others. The attitude that one has towards the person who uses that vocabulary becomes an attitude to the vocabulary, i.e. it becomes a connotation of that word.[35] Words such as 'bunny', 'alkaloid', 'case the joint', 'it's real cool', 'ontological', 'peekaboo', 'sublapsarian' are offered as examples of expressions that are associated with different types of people.

Secondly, words used by the same people in different circumstances carry quite different connotations (e.g. 'damn' used in a church as against in a beerhall). TAPOT treats the situational level of 'langue', e.g. technical, formal, informal, casual and intimate later.[36] The nature of the total environment has its effect on the connotations of words too, and the example cited of the different connotations of colours in Africa, is also valid in Indonesia, where different ethnic groups have different emotional reactions to different colours. Thus Chinese in Central Java, as elsewhere, regard red as the appropriate colour for festivities as it has connotations of happiness and good luck. For the local Javanese however, red symbolizes all that is bad—anger, blood, etc.—and many would not buy Bibles with red covers.

Thirdly, the linguistic setting in which words tend to occur gives them various connotations. Writing before environmental concerns had given rise to the 'green movement' Nida suggests that 'green' in English suffers from its occurrence in 'green

---

34 E.A. Nida and C.R. Taber, *The Theory and Practice of Translation*, (Helps for Translators, No.8; Leiden: Brill, 1969) 92-94.

35 E.A. Nida and C.R. Taber, *The Theory and Practice of Translation*, (Helps for Translators, No.8; Leiden: Brill, 1969) 93.

36 E.A. Nida and C.R. Taber, *The Theory and Practice of Translation*, (Helps for Translators, No.8; Leiden: Brill, 1969) 128-129.

with envy', 'green at the gills', 'a green worker' and 'green fruit'. Again one could contrast the Indonesian context where this colour, for many, arouses very favourable reactions because of the association with Islam. Linguistic setting includes the time dimension and literary setting too.[37] Thus phrases such as 'Uncle Tom', 'Mary's little lamb', 'Thus saith the Lord' are inevitably associated with the literary works in which they are found. Measurement of the connotative values of words is important for Bible translators. Of all the methods tried so far the matrix of Osgood, Suci and Tannenbaum is said to be the least inadequate.[38]

B. SOME ISSUES

As he acknowledges in the preface to a later book,[39] Nida was inspired by the structural semantic insights of the two American anthropologists, Lounsbury and Goodenough, who—inter alia through the study of American Indian kinship terms—made componential analysis of meaning on a socio-cultural basis. That Nida acknowledges his debt to these two scholars in particular is understandable when one remembers that his qualitative reference point for Bible translation is the socio-cultural differentiated 'closest natural equivalent'. The larger the socio-cultural and typological distance between the SL and the RL, the more difficult this is to attain.

Although Nida's basic theoretical orientation at this point is of the generative-semantic type, we can be grateful that he has abandoned the use of complicated tree diagrams in presenting linguistic data and has developed a descriptive relationship which guarantees comprehensibility. As always this is the strength of Nida's exposition. It lucidly presents a wealth of observational insights reflecting life-long acquaintance with a variety of practical problems that confront a director of a Society for Bible translation. But comprehensibility does not necessarily guarantee scientific stringency. Componential analysis would seem to be a potentially useful tool for defining the differences between respective meanings and Nida's treatment has much that is suggestive and valuable.

Margaret Masterman makes the interesting comment, however, that Nida's method 'does not work well for the great key words of the Bible'.[40] Certainly I agree with her when she points out the inadequacy of Nida's analysis of the three sets: (a)

---

37 E.A. Nida and C.R. Taber, *The Theory and Practice of Translation*, (Helps for Translators, No.8; Leiden: Brill, 1969) 94.

38 E.A. Nida and C.R. Taber, *The Theory and Practice of Translation*, (Helps for Translators, No.8; Leiden: Brill, 1969) 93-94.

39 E.A. Nida, *Componential Analysis of Meaning: An Introduction to Semantic Structures*, (The Hague: Mouton, 1975).

40 M. Masterman, 'Bible Translation by Kernel', *Times Literary Supplement*, (19 March 1970) 301.

repentance/remorse/conversion; (b)prayer/mediation/communion/worship; and (c) holy/good/righteous,[41] not however, because of any failure to recognize certain components of religious mystery as she seems to imply. My problem is rather that at this point, Nida and Taber seem to abandon their scientific approach. No linguistic context is supplied for the terms under discussion. The terms themselves are a funny hotchpotch. 'Repentance', 'remorse', 'conversion' and 'salvation' are introduced as English words and their meanings are discussed without reference to any possible sentences in which they might occur. Worse still, 'repentance' is singled out for exposition in terms of the Greek word μετανοέω that is said to be behind it.[42]

In the discussion of contrast in semantic areas and levels the set: 'prayer/meditation/communion/worship' are introduced as biblical terms but no contexts are supplied to justify the analysis. In fact, 'meditation' and 'communion' are not biblical terms as any concordance of the English Bible will show and the discussion of these words is more in the nature of a theological argument than an exercise in linguistic analysis.

The next set: 'holy'/'good'/'righteous' (in Matthew) and 'righteous' (in Paul) is composed of biblical words which are said to share common components such as 'socially approved', 'religiously appropriate qualities' and 'characteristics of personality'. The distinctions said to be revealed by diagnostic components are quite plausible but no examples are given.[43]

The discussion of overlapping semantic areas is illustrated with the series: 'grace', 'favour', 'kindness', 'mercy'. The authors apparently drift back into general English usage and the analysis is once again carried out and discussed without being anchored in linguistic contexts.[44] Only in the analysis of the Greek words ἀγαπάω and φιλέω (both translated 'love') do we find a relatively scientific treatment. Many biblical scholars have seen important distinctions of meaning but Nida shows that in one key passage, John 21:15-17, there is no semotactic frame to distinguish such meanings.[45]

---

41 E.A. Nida and C.R. Taber, *The Theory and Practice of Translation*, (Helps for Translators, No.8; Leiden: Brill, 1969) 66-71.

42 E.A. Nida and C.R. Taber, *The Theory and Practice of Translation*, (Helps for Translators, No.8; Leiden: Brill, 1969) 67.

43 E.A. Nida and C.R. Taber, *The Theory and Practice of Translation*, (Helps for Translators, No.8; Leiden: Brill, 1969) 71.

44 E.A. Nida and C.R. Taber, *The Theory and Practice of Translation*, (Helps for Translators, No.8; Leiden: Brill, 1969) 74.

45 E.A. Nida and C.R. Taber, *The Theory and Practice of Translation*, (Helps for Translators, No.8; Leiden: Brill, 1969) 75-76.

Again, componential analysis is applied to the Greek term sw'ma (this time with reference to actual biblical contexts) and five meanings are distinguished.[46] This is undoubtedly instructive for biblical interpretation and translation but raises a problem, viz. what about the 'common element' that links these five notions together in the NT documents? How does the translator do justice to the integrating factor in the SL term? In technical terminology, in particular, this could be crucial.

Some biblical references are supplied to illustrate the 'distinctions in meaning between 'god' and 'gods', a unique singular and generic plural', but the argument is unnecessarily weakened by failure to clarify whether the case is being based on the original Hebrew and Greek texts or on the English Bible usage. Hebrew terms are mixed in with English ones.[47] Almost as if anticipating this objection, Nida goes on to emphasize that because a term may have a number of different meanings in Scripture it is imperative to specify the context.[48]

This point has received much attention in biblical research.[49] However, Nida's analysis of the two terms given as examples ('redeem' and 'God'/'gods') fails at this point. Three meanings of 'redeem' are offered on the basis of Scripture uses: (1) redeem a slave, (2) redeem Israel from Egypt, (3) redeem by Jesus Christ. All these meanings include the common components of alien contral and release but only the first, it is claimed, includes the notion of payment of a price. However, no linguistic contexts are supplied.

With regard to the analysis of figurative meaning summarized in part A above, we have already seen that Nida's treatment is more subjective than he would care to admit. In particular the analysis of terms like 'blood' and 'circumcision', central concepts in the biblical corpus, leaves much to be desired.

Because of the need to elicit an equivalent emotional response from receptors in DE translation, connotative meaning is extremely important, and Nida stresses this factor

---

46 E.A. Nida and C.R. Taber, *The Theory and Practice of Translation*, (Helps for Translators, No.8; Leiden: Brill, 1969) 80.

47 E.A. Nida and C.R. Taber, *The Theory and Practice of Translation*, (Helps for Translators, No.8; Leiden: Brill, 1969) 82-83.

48 E.A. Nida and C.R. Taber, *The Theory and Practice of Translation*, (Helps for Translators, No.8; Leiden: Brill, 1969) 81.

49 J. Barr, *Semantics of Biblical Language*, (Oxford: Oxford University Press, 1961) and *Biblical Words for Time* (SBT 33, 2d ed. London: SCM, 1969). J.F.A. Sawyer, *Semantics in Biblical Research*, (London: SCM, 1972). A.C. Thiselton, 'Semantics and New Testament Interpretation', *New Testament Interpretation* (ed. I. H. Marshall; Exeter: Paternoster 1977) 75-104. J.P. Louw, *Semantics of New Testament Greek*, (Semeia Studies; Philadelphia: Fortress Press, 1982. M. Silva, *Biblical Words and Their Meaning* (Grand Rapids; Zondervan, 1983, 1994 (revised edition).

not only in the semantic analysis of the ST but also in his later chapters on Transfer and Restructuring. His treatment is always interesting and usually convincing. We have already seen the relevance of his discussion on the connotations of colours to the Indonesian situation. Of particular interest too, is his reference to the linguistic setting, characteristic of a word, as an important source of connotation. Nida cites phrases such as: 'Uncle Tom', 'Mary's little lamb', and more importantly, 'Thus says the Lord', which are associated with the special literary setting in which they are found. One might suggest that this point has relevance for the translation of cultic words and for biblical language generally. How does one retain such associations in the RL if one's theory of translation dictates naturalness in the target language?

Nida has been criticized for his explanation of 'verbal taboos'. We read in TAPOT[50] that in the case of such expressions as the four letter words 'the taboo is against the word and not the referent'. But Siertsema would seem to be correct when she says that our negative reaction is in fact to the referent. That is why euphemisms are so ephemeral and may be replaced two or three times in one lifetime. For as soon as their meaning becomes so well known that their camouflage function is lost, a new camouflage is looked for in the form of a new euphemism for the unpleasant referent. In fact 'undertaker' and 'toilet' were once euphemisms.[51] Likewise, negative reactions to four letter words would seem to involve more than Nida admits. These are surely not just a matter of taboo in a certain social setting—a case of non-U language. Anthropological research would indicate that there is a unanimity in the use of widely different languages reflecting a unanimity of attitude towards the things meant..[52]

In retrospect Nida and Taber's treatment of Connotative meaning, though stimulating, seems too broad and imprecise. Geoffrey Leech's *Semantics* offers sharper and more useful analysis. Leech suggests seven types of meaning. The first—Conceptual meaning—coincides with Nida's Referential Meaning. But Nida's Connotative meaning is subdivided into Connotative, Stylistic, Affective, Reflected and Collocative meaning. Leech also adds Thematic meaning—what is communicated by the way in which the message is organized.[53]

We should record that Nida's thinking on semantics has continued to develop. In chapter 5 we have noted his important work, with J.P. Louw, on semantic domains.

---

50 E.A. Nida and C.R. Taber, *The Theory and Practice of Translation*, (Helps for Translators, No.8; Leiden: Brill, 1969) 91.

51 B. Siertsema, 'Linguistic De-Stigmatization', *On Language, Culture and Religion:: In Honor of Eugene A. Nida* (ed. M. Black and W.A. Smalley; The Hague: Mouton, 1974) 319.

52 B. Siertsema, 'Linguistic De-Stigmatization', *On Language, Culture and Religion:: In Honor of Eugene A. Nida* (ed. M. Black and W.A. Smalley; The Hague: Mouton, 1974) 321-322.

53 G. Leech, *Semantics* (London: Penguin Books 1974) 10-26.

Finally, one might add that an evaluation of Nida's semantics will be largely dependent on our assessment of the value of componential analysis. A componential approach to semantics has been advocated not only by mentalist theorists such as Chomsky and Katz, but also by linguists of different presuppositions such as Hjelmslev and Jakobson. Lyons, who has a good discussion of the topic, describes componential analysis as 'a technique for the economic statement of certain semantic relations between lexical items and between sentences containing them'.[54] But he draws attention to a theoretical problem in the approach in so far as the semantic features themselves have the status of lexical units. This means that the analysis is dependent on features which actually should only be the result of componential analysis. Hence 'one cannot avoid the suspicion that the semantic components are interpreted on the basis of the linguist's intuitive understanding of the lexical items which he uses to label them.'[55] Certainly, as we have seen above, Nida's analysis is not free from subjectivism.

---

54 J. Lyons, *Introduction to Theoretical Linguistics* (Cambridge Unviersity Press, 1968) 476.
55 J. Lyons, *Introduction to Theoretical Linguistics* (Cambridge Unviersity Press, 1968) 480.

CHAPTER EIGHT

TRANSFER AND RESTRUCTURING

A. SIGNIFICANT FACTORS IN TRANSFER

Having dealt with the processes of both Grammatical and Semantic analysis Nida and Taber address the problems involved in transferring the results of the analysis from the SL to the RL. Before the actual process of transfer is discussed there are some wise words on practical problems that often arise in connection with personnel involved in that transfer, whether the translators are foreign or national.[56] For example, theologically trained persons often have real problems learning how to translate for a level other than the one in which they habitually operate. Again, some national translators have such a deep sense of insecurity about their own language that they may feel obliged to imitate the forms of other languages which they regard as having more prestige.

The transfer is made at the near kernel level—that is at the point where the kernels have been connected in such a way as to indicate their precise relationships. Nida claims that the relationship between kernels may be of three kinds: (1) temporal, (2) spatial, and (3) logical. Transfer on this near kernel level is less likely to distort the message because relations between the linguistic units of a message are more clearly marked at this level and because languages exhibit far greater similarity of structure at the near kernel level than they do in their surface structures.[57]

1 Semantic Adjustments

Transfer will necessitate both semantic and syntactic adjustments. If the form of the original message can be preserved, well and good. But it is the content which must be preserved at any cost; the form, except in special cases such as poetry, is largely secondary, since within each language the rules for relating content to form are highly complex, arbitrary and variable. 'It is a bit like packing clothing into two different pieces of luggage: the clothes remain the same, but the shape of the suitcases may vary greatly, and hence the way in which the clothes are packed must be different'[58] What

---

56 E.A. Nida and C.R. Taber, *The Theory and Practice of Translation*, (Helps for Translators, No.8; Leiden: Brill, 1969) 99-104.

57 E.A. Nida, *Language Structure and Translation*, (Stanford: Stanford University Press, 1975) 91.

58 E.A. Nida and C.R. Taber, *The Theory and Practice of Translation*, (Helps for Translators, No.8; Leiden: Brill, 1969) 105.

counts is that the clothes arrive at the destination in the best possible condition, that is, with the least damage. Nida's analogy is amazingly crude. That it is used in a translator's manual such as TAPOT is perhaps understandable. That it should be repeated in a presidential address to the Linguistic Society of America is more surprising.[59]

In any translation there will be some loss of semantic content. The commonest problems of transfer arise in the area of: (1) idioms; (2) figurative meanings; (3) shifts in central components; (4) generic and specific meanings; (5) pleonastic expressions; (6) special formulas (e.g. epistology); (7) redistribution of semantic components, and (8) provision for contextual conditioning (e.g. by adding classifiers or descriptive phrases). Helpful examples of each are provided.[60]

In the process of transferring the referential content of the message there are three different types of redistribution of the componential structures.[61] First, there may be a complete redistribution. This is especially true in the transfer of idioms. For example, a literal transfer of the biblical idiom 'heap coals of fire on his head' normally involves a distortion of meaning. One Congolese tribe considered that this was reference to some new method for torturing enemies to death. They had not thought of such a technique before! The meaning of this idiom—i.e. its componential structure—must be completely redistributed, so that it can be transferred in a form such as 'to be so good to one's antagonist as to make him ashamed'. Second, the process of transfer may involve an analytical redistribution of the components. This means that what is carried by one lexical unit in the source language is distributed over several terms in the receptor language. For example 'disciples' may be transferred as 'those who followed him', 'saints' may be 'the people of God', and 'phylacteries' may be rendered as 'little leather bundles with holy words in them'. Third, the process of transfer may involve a synthesis of components. An expression such as 'brother and sister' may be transferred as 'siblings'; and in the More language of the Haute Volta, what is sixteen words in English—'in the morning, a great while before day, (he) rose and went out to an uninhabited place' (Mark 1:35)—becomes only one word, for all the componential features of meaning are included in the single More term.

---

59 E.A. Nida, *Language Structure and Translation*, (Stanford: Stanford University Press, 1975) 91.

60 E.A. Nida and C.R. Taber, *The Theory and Practice of Translation*, (Helps for Translators, No.8; Leiden: Brill, 1969) 106-111.

61 E.A. Nida and C.R. Taber, *The Theory and Practice of Translation*, (Helps for Translators, No.8; Leiden: Brill, 1969) 109. cf. E.A. Nida, *Language Structure and Translation*, (Stanford: Stanford University Press, 1975) 92.

2. Structural Adjustments

Attempts to preserve structural form in transfer usually result in complete unintelligibility or at least awkwardness. Nida discusses those modifications dictated primarily by the obligatory contrasts in the respective near-kernel structures. The optional modifications figure at a later stage as one undertakes to restructure the message by forward transformation to the appropriate level. An important section on the provision of contextual conditioning [62] is followed by a good discussion of the kind of structural adjustments often found necessary in the RL. These structural adjustments are classified in terms of four levels:

a. Discourse Structure: Common problems in adjustment include the handling of direct and indirect discourse, pronominal forms, identification of participants and sequence of tenses.

b. Sentence Structure: the most important problems here are: (a) word and phrase order, (b) double negatives, (c) number agreement, (d) active and passive structures, (e) co-ordination and subordination, (f) apposition, (g) ellipses, and (h) specifications of relationships.

c. Word Structure: The relationship of word structure to the problems of transfer are of two principal types. Firstly, translation often demands changes in grammatical classes (e.g. from noun to verb where the noun expresses an event). Secondly, there are numerous subtle problems of morphological categories involving, for example, aspects, tenses, inclusive and exclusive pronouns, honorifics and distinctions between people who are dead or alive.

d. Corresponding Sounds: for instance, in re-casting borrowed words, particularly proper names, the phonological structure of the RL is normally followed. But often further adjustments are necessary as, for instance, when the transferred term sounds like an indigenous word having a different association altogether. Again, in the process of transfer, first priority is given to the referential conceptual burden of the message. Next in importance is its connotation, emotional flavour and impact. finally, if one can carry over something of the form, one should do so but not at the expense of other priorities.[63]

---

62 E.A. Nida and C.R. Taber, *The Theory and Practice of Translation*, (Helps for Translators, No.8; Leiden: Brill, 1969) 109 -111

63 E.A. Nida and C.R. Taber, *The Theory and Practice of Translation*, (Helps for Translators, No.8; Leiden: Brill, 1969) 119

B. SIGNIFICANT FACTORS IN RESTRUCTURING (TAPOT CHAPTER 7)

Having transferred the message from the SL to the RL the translator is faced with the task of restructuring. Three perspectives must be taken into account:

1. The varieties of language or styles which may be desirable
2. The essential components and characteristics of these various styles
3. The techniques which may be employed in producing the type of style desired.[64]

These we discuss in order:

1. Varieties of Language

Firstly, one has to determine the style at which one should aim in the process of restructuring. For within each language there are variations according to geography (dialects), time (older vs newer forms), socio-economic classes or castes, circumstances of use, oral or written usage, types of discourse and literary genres. From the standpoint of the translator, a language's literary tradition is also very significant. Nida acknowledges that in English the KJV continues to exert significant influence providing many literary associations and well entrenched stylistic usages.[65]

In deciding which situational level is appropriate, the translator is confronted with three principal alternatives: technical, formal and informal. For some literary genres there are also casual and intimate levels of language. The greatest mistake is to reproduce formal or informal levels in the SL by something which is technical in the RL. Nida claims that this has happened consistently in the case of Paul's letters which in translation turn out as highly technical treatises rather than the pastoral letters that they are.[66]

There is an instructive discussion of language levels and their significance for Bible translation in societies which have a literary tradition.[67] Not only does a scientific orientation mean distinguishing clearly between the oral and the written language, it must also delineate the respective ranges of 'producer language' and 'consumer language'. The spread of consumer language is greater than that of the producer

---

64 E.A. Nida and C.R. Taber, *The Theory and Practice of Translation*, (Helps for Translators, No.8; Leiden: Brill, 1969) 120.

65 E.A. Nida and C.R. Taber, *The Theory and Practice of Translation*, (Helps for Translators, No.8; Leiden: Brill, 1969) 122-123.

66 E.A. Nida and C.R. Taber, *The Theory and Practice of Translation*, (Helps for Translators, No.8; Leiden: Brill, 1969) 129 cf. E.A. Nida, *Language Structure and Traslation* (Stanford: Standord Unviersity Press, 1975) 93.

67 E.A. Nida and C.R. Taber, *The Theory and Practice of Translation*, (Helps for Translators, No.8; Leiden: Brill, 1969) 120-123.

language. In other words, people are able to hear and read more than they can say or write.

In the following diagram, Figure 3, X and Y represent two typical speakers, one from the higher language level and the other from the lower language level. 'Higher' and 'lower' relate to educational levels or socio-economic status. Solid lines represent the producer language (i.e. that which X and Y can produce in speech or writing). Broken lines represent the consumer language (i.e. the range of language they are able to understand). Although the total range of X's language is greater than that of Y, he does not usually understand the total range of Y's language. The extension of the written language above the oral language shows that the written language has a literary accretion coming from its historical traditions. Of particular interest to Nida is the area of the overlap represented by the lines A-B and C-D. This is the 'common language' or that part of the total resources of a given language common to the usage of both educated and uneducated people.[68] This concept of 'common language' is crucial in understanding the rationale for the Good News Bible (TEV) and its foreign language counterparts.

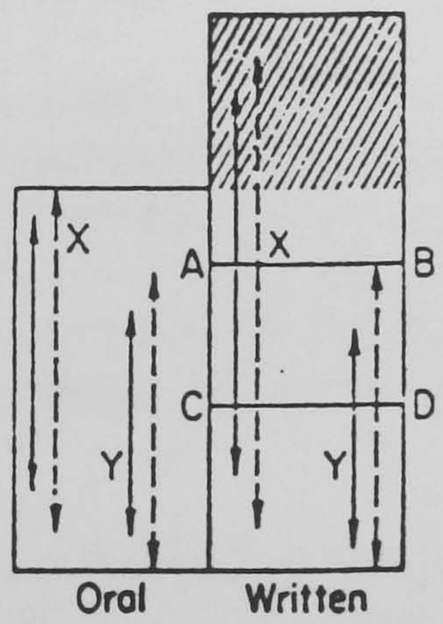

Figure 3

The authors then proceed to provide another diagram (Figure 4) in order to provide an historical perspective not depicted in Figure 3. For in all languages with a literary heritage there are many documents which reflect earlier stages of the language. Thus Bible versions often reflect long established literary associations and stylistic usages.

---

68 cf. W.L. Wonderly, *Bible Translation for Popular Use* (Helps for Translators, Vol 7; London: United Bible Societies, 1968) 3.

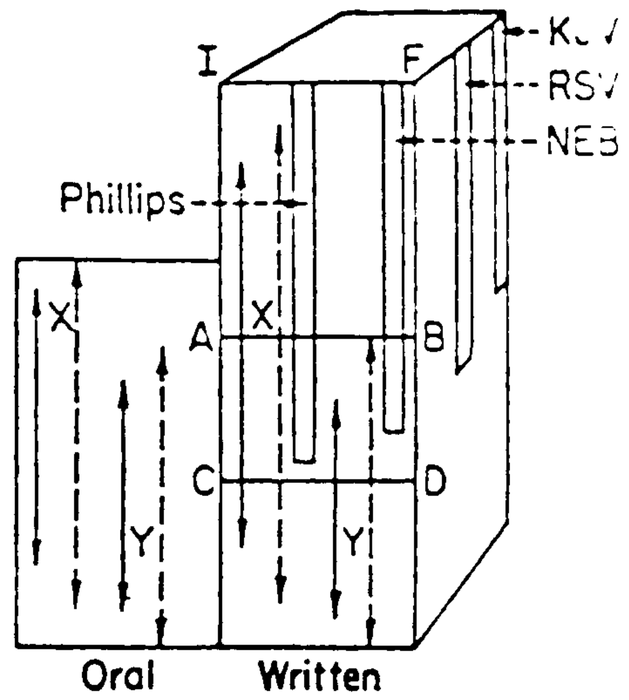

Figure 4

"Several features of this diagram should be noted:

1. The historical depth has been indicated only for the written language. Since the oral language, though it was spoken in the past, exerts no such continuing influence upon the present.

2. We have also added a dimension of 'informal-to-formal' (I to F) going from the left to right, and thus are able to plot such divergent translations as the NEB and Phillips, which are both on a relatively high stylistic level but differ essentially in the degree of informality. The NEB is, however, somewhat higher in its literary style.

3. The King James Version is listed at the extreme of the historical dimension, even though, of course, it was preceded by others. However, it is the only translation from the early period that exerts a significant continuing influence.

4. The RSV represents a somewhat middle position between the King James Version and contemporary usage. As far as vocabulary usage is concerned, however, it is not on such a high literary level as the NEB. On the other hand, the NEB is stylistically much simpler in sentence structure, so that in some measure these two factors produce an average which makes the RSV and the NEB somewhat parallel.

5. Phillips' translation may be said to dip a little further than the NEB into the language of overlap between the upper and lower languages.

6. To avoid overburdening an already complex diagram, the bar which represents each version is in reality a composite of all linguistic features of that version, including both grammatical structure and vocabulary. But different versions may be at different levels in terms of structure and vocabulary."[69]

There follows an equally interesting and convincing section on language levels and dialects in societies where the language has either no literary history or only a brief one, and the appropriate translation strategies.[70] But these are not relevant to us here.

---

69 E.A. Nida and C.R. Taber, *The Theory and Practice of Translation*, (Helps for Translators, No.8; Leiden: Brill, 1969) 122-123.

70 E.A. Nida and C.R. Taber, *The Theory and Practice of Translation*, (Helps for Translators, No.8; Leiden: Brill, 1969) 124-133.

2. Components of style

A special problem confronted by Bible translators is the wide variety of discourse types found in the biblical text, e.g. epic poetry, proverbs, parables, exposition, historical narrative, personal letters and ritual hymns. Though languages with long literary traditions have much more highly standardized genres, even the most traditional societies can have quite elaborate forms of oral literature, involving a number of distinct types; hence there is much more likelihood of formal correspondence (FC) than most people imagine. However, the real problems are not in the existence of the corresponding literary genres, but in the manner in which such diverse forms are regarded by the people in question. For example, epic and didactic poetry are very little used in the Western world, but in many parts of Asia they are very popular and have much of the same value they possessed in biblical times. But for most persons in the Western world, the authors claim, presenting the prophetic utterance of the OT in a poetic form (as the closest formal equivalence) would be unnatural, and even at times silly.

Nida sets out to analyze the components of style by comparing selections from the Gospel of Luke and the letter to the Hebrews in three different versions viz. the RSV, a FC translation; the NEB, a modern history translation; and the TEV. On the basis of these passages he notes such features as: discourse-transition markers, discourse-type markers, elimination of pleonasm, semotactic appropriateness, intra-discourse transition, semantic simplicity, pronominal reference, subordination of clauses, connotative equivalence, length of sentences, and so on. All these are examples of formal features which combine to produce certain styles.[71]

The point of this analysis of formal stylistic features, however, for DE translation theory is not to reproduce such stylistic devices but to understand their function in the source text. A translation is judged to be adequate only if the response of the receptor is satisfactory. Hence Nida is concerned to analyze which features of style serve to increase efficiency in communication and which devices increase impact by enhancing interest.[72]

Studies in discourse structure are seen to be highly significant for translation. Accordingly, the basic techniques for analyzing discourse structure are explained with

---

71 E.A. Nida and C.R. Taber, *The Theory and Practice of Translation*, (Helps for Translators, No.8; Leiden: Brill, 1969) 133-154.

72 E.A. Nida and C.R. Taber, *The Theory and Practice of Translation*, (Helps for Translators, No.8; Leiden: Brill, 1969) 145-152 cf. E.A. Nida, *Language Structure and Traslation* (Stanford: Standord Unviersity Press, 1975) 93-94.

examples. The eight universals of discourse are also elaborated, viz: (1) markers of the beginning and end of discourse; (2) markers for internal transition; (3) markers of temporal relationship; (4) markers of spatial relationship; (5) markers of logical relationship; (6) the identification of participants; (7) highlighting, focus, emphasis, etc; and (8) author involvement.[73]

The remainder of the chapter on Restructuring[74] consists of practical wisdom with regard to the kind of persons who make good stylists—firstly in the case of languages with long literary tradition, and secondly in languages lacking such a tradition.

TAPOT's final chapter (Chapter 8), Testing the Translation, includes some material one might have expected to find in the section on restructuring. For instance, we are told that there is tendency for all good translations to be somewhat longer than the originals. This is because of the necessity to make explicit in the RL what could remain implicit in the SL since the original receivers had more background information. The expansions required can be divided into syntactic and lexical categories.

In syntactic expansions the RL will often require: (a) identification of the participants in events; (b) identification of objects or events with abstracts; (c) more explicit indications or relationals; and (d) filling out of ellipses. The most common lexical expansions on the other hand, consist of: (a) classifiers (e.g. 'city of Jerusalem', 'cloth linen', 'sect Pharisee'); (b) descriptive substitutes (e.g. synagogue may be described as 'the worship-house of the Jew'); and (c) semantic restructuring (e.g. Nida thinks that 'I am a jealous God' (Exodus 20:5) might be restructured 'I am a God who demands that my people love no one else other than me' to avoid misunderstanding). Other information regarded as necessary to an understanding of the message, e.g. from the general cultural background, can be inserted in marginal notes. This whole section is an important and helpful one even though sometimes one feels that Nida is doing a rewrite of the original text in his concern to get the message across.

While Nida claims that good translations are normally longer than the originals, he mentions seven types of expression that are often reduced in the process of transfer:

1. Doublets such as 'answering, he said' become 'he answered'
2. Repetitions in the original Greek, e.g. 'Verily, verily'

---

73 E.A. Nida and C.R. Taber, *The Theory and Practice of Translation*, (Helps for Translators, No.8; Leiden: Brill, 1969) 152-157.

74 E.A. Nida and C.R. Taber, *The Theory and Practice of Translation*, (Helps for Translators, No.8; Leiden: Brill, 1969) 157-162

3. Specification of participants, e.g. the TEV does not reproduce many of the occurrences of 'God' so frequently subject of sentences in the original text of Genesis 1
4. Removal of conjunctions where hypotactic structures are reduced to paratactic ones
5. Reduction of formulas, e.g. TEV changes 'for his name's sake' to 'for his sake'
6. Sometimes the RL requires more extensive ellipsis than is found in the SL
7. Highly repetitive style marking, e.g. importance of the theme in SL may seem awkward in some RL.

After discussing a number of procedures for testing translation, (e.g. Cloze technique, reading aloud, publication of sample material) Nida and Taber conclude by asserting:

> The ultimate test of a translation must be based upon three major factors: (1) the correctness with which the receptors understand the message of the original; (2) the ease of comprehension, and (3) the involvement a person experiences as the result of the form of translation.[75]

C. SOME ISSUES—FORM AND MEANING

The main issue to arise from Nida's treatment concerns the significance of the form of the original message for translation. As we have noted above Nida seems to operate with a concept of disembodied meanings.

Subsequently, the translator of the German common language version explained that in the matter of relationship between content and form TAPOT was a bit one-sided. But this exaggeration is understandable if one remembers the dominance of the FC approach to Bible translation at the time. When DE theorists turned to the task of translating the OT 'it became obvious...that an understandable rendering of the information is not necessarily a satisfactory translation. The Old Testament, with its greatly differing types of literature, forces the translator to seriously consider its forms'. But then Kassuhlke goes on to explain that it is not the exact reproduction of the form used which is important but its equivalence.[76] Another DE theorist, Jacob Loewen, has sought to define some limits and controls for adjusting the SL form in translating because some translators 'anxious to get the real message across to tribal societies, are preparing translations which treat the historico-cultural setting of the Bible as irrelevant and which recast the biblical message into the cultural framework of a contemporary aboriginal society'.[77]

---

75 E.A. Nida and C.R. Taber, *The Theory and Practice of Translation*, (Helps for Translators, No.8; Leiden: Brill, 1969) 173.

76 R. Kassuhlke, 'Medium and Message — the Form and the Meaning', *Bulletin of the United Bible Societies* 108/109 (1977).

77 J.Loewen, 'Form and Meaning in Translation,' *TBT* 22:4 (1971) 170.

Others, however, are prepared to go much further than Nida himself. For instance, some of Nida's proteges have suggested that the salutations and introductory material of the NT letters should be transposed to the end of each Epistle as is the modern custom. Thus Barclay Newman says that the Epistle is a total discourse unit and meaning has priority over form.[78] He has also suggested that the genealogy from Abraham to Joseph in Matthew 1:2-17 be replaced by a simple list of names such as would be natural today.[79] DE translations in some languages (e.g.. Malay and Indonesian) have implemented such ideas. The problem is that such restructured translations are in danger of obliterating the real historical distance between ourselves and the original situation. The result is an artificial construction. It is unnatural to let that temporal and cultural distance fall away, a danger against which Nida himself warns.[80]

Nida's emphasis on utilizing the natural resources of the RL is salutary and as usual he provides a wealth of illustrative material. Nor is there virtue in retaining Semitic idioms which are peripheral to the message, e.g. 'the fruit of his loins' (Acts 2:20) and 'children of the bride-chamber' (Mark 2:19), if they are too burdensome for the reader or misleading. Thus the literal translation in Indonesian of Luke 2:23 has been abandoned in recent versions because of the misleading connotation. 'Every male who opens his mother's womb shall be called holy to the Lord' has been replaced by 'every first born son shall be dedicated to the Lord'. However, one often feels that the restructuring recommended is far more radical than is necessary, and amounts to a rewrite of the ST.

Furthermore, the treatment of the redistribution of semantic components[81] raises the issue of the fate of technical terminology in DE translation. Many of the words chosen by Nida for analytical redistribution are arguably technical terms—'the saints', 'inheritance', 'redemption', 'propitiation', 'justify'—which serve as important signposts to the universe of discourse of the NT writers and their original readers.

In summary, Nida's treatment of transfer and restructuring strengthens the impression gained from the earlier chapters of TAPOT that his theory of language is unsatisfactory at two points: it underestimates the complexity of the relationship between form and

---

78 B. Newman, 'Some Suggested Restructurings',*TBT* 25:2 (1974) 240-245.

79 B. Newman, 'Matthew 1:1-18: Some comments and a suggested restructuring', *TBT* 27 (1976) 209-212.

80 E.A. Nida and C.R. Taber, *The Theory and Practice of Translation*, (Helps for Translators, No.8; Leiden: Brill, 1969) 134.

81 E.A. Nida and C.R. Taber, *The Theory and Practice of Translation*, (Helps for Translators, No.8; Leiden: Brill, 1969) 109.

meaning on the one hand, and on the other, the flexibility of language systems and their users. With regard to the question of form and meaning, the translation theorist cannot think in terms of disembodied meanings. His task is to establish correspondences between expressions of different languages. He must operate with expressions, not with wordless ideas:

> He is not transferring wine from one bottle to another. Language is no receptacle, and there is nothing to transfer. To produce a likeness is to follow a model's lines. The language he works in is the translator's clay.[82]

The Bible translator then, must not see the RL in which he is working as a system of unbreakable rules. The KJV which is said to have had such a profound influence on the English language, has been said to be written, in Hebraicized English, as we shall see. Languages are capable of being influenced and renewed just as the humans who use them are:

> Darlene Bee and Vida Chenoweth were checking their translation of the calming of the tempest in the Usarufa language. Their translation helper, Nogo, came to Mark 4:39 and read '..."Be quiet", he said, and right away the wind and the water obeyed and stopped raging.' Nogo stopped abruptly. 'No, No!' he exclaimed, 'Wind and water don't obey.' Thinking that they had used the wrong term the translators went back over the account...'Now, how can we say in Usarufa that the wind and the water did what Jesus told them to do?' they asked the tribesman. Smiling in wonder, Nogo said, 'Oh, I see. 'It obeyed.' The translators had used the right word after all. In Usarufa no one had ever said that the wind obeyed...[83]

---

82 W. Haas, 'The Theory of Translation', *The Theory of Meaning* (ed. G.H.R. Parkinson, Oxford: Oxford University Press, 1968) 86

83 C. Yallop, 'The Lord is my Goatherd; I Don't Want Him', *Interchange* No.16 (1974) 220.

III DE Theory Incarnate—The Good News Bible

CHAPTER NINE

BACKGROUND—THE BIBLE IN ENGLISH

No translation of the Bible can be undertaken or evaluated without due regard to its predecessors in the field. An Israeli linguist has commented that the translation of the Bible into English has been 'distinguished by two salient features: the constant appearance of new translations and the continuing fascination of an archaic master version'.[1]

The history of English Bible translation is a fascinating one worthy of a volume itself.[2] What follows is but a brief sketch; but a necessary background to any discussion of modern principles of Bible translation and to our evaluation of the Today's English Version and its influence on recent foreign versions.

Although Christianity was established in Britain by the beginning of the fourth century AD, there is no evidence of Bible translation in the two Celtic languages (British and Irish) or in Pictish. Thus the famous British biblical scholar Pelagius (370-450) wrote his works in Latin as did all the other churchmen of Western Europe. The history of the English Bible, anyway, can only begin with the arrival of the Germanic speaking Angles, Saxons and Jutes in the fifth century and their evangelization in the sixth and seventh centuries by Irish and Roman missions.

Some Old English poems presenting the Biblical narrative in metrical form have survived and these have been connected with Caedmon, the unlettered poet of Whitby, whose remarkable gifts have been recorded by Bede in his *Ecclesiastical History of the English Nation*.. Bede himself, who died in 735, is supposed to have completed the dictation of John's Gospel with his dying breath, but unfortunately his version has not been preserved. Kind Alfred (d. 901), of burnt cakes fame, introduced his law code with an English translation of the Ten Commandments, part of Exodus and Acts 15:23-29 and is also credited with translation of part of the Psalter. Abbot Aelfric translated much of the OT in the tenth century. Old English versions of the Gospels, Psalter, Pentateuch and historical books of the OT have come down to us.

---

1 A. Newman 'Semantic Mapping of a Text' (Exodus 23:8), *Meta*, Vol. 21:2 (1978) 160

2 Such a volume has been provided in F.F. Bruce's excellent *History of the Bible in English* (3rd ed.; London: Lutterworth, 1979). For other useful reference works see Works Cited, especially the 3 volume *The Cambridge History of the Bible* (London: Cambridge University Press (S.L. Greenslade et al. eds;1963, 1969, 1970).

Middle English, which reflects the influence of the French of the Norman invaders, begins about 1300. The Bible translations which quickly emerged are associated with the name of Wycliffe, though the tradition that Wycliffe himself translated the whole Bible rests apparently only on a statement of his famous Czech disciple, Jan Hus. There are two extant Wycliffe versions of the Bible, one literal and one idiomatic. The first, which follows the Latin very closely, was the work of Nicholas of Hereford (a follower of Wycliffe) so far as the OT is concerned; the rest is by another hand, possibly that of Wycliffe himself. The more idiomatic revision was the work of Wycliffe's secretary, John Purvey, towards the end of the fourteenth century. Purvey's prologue contains some interesting information on the state of Bible translations and part of it is worth quoting.

> A simple creature hath translated the Bible out of Latin into English. First, this simple creature has much travail, with divers fellows and helpers, to gather many old bibles, and other doctors and common glosses, and to make one Latin Bible some deal true; and then to study it anew, the text with the gloss, and other doctors, as he might get, especially Lira on the Old Testament, that helped full much in this work; the third time to counsel with old grammarians and old divines, of hard words and hard sentences, how they might best be understood and translated; the fourth time to translate as clearly as he could to the sentence, and to have many good fellows and cunning at the correcting of the translation.

He knows that he has not attained perfection; any amendments to his work will be welcome, but let the critic:

> ...look that he examine truly his Latin Bible, for no doubt he shall find fully many Bibles in Latin full false, if he look many, namely new; and the common Latin Bibles have more need to be corrected, as many as I have seen in my life, than hath the English Bible late translated.[3]

Purvey's mention of the famous Hebrew and Greek scholar Nicholas de Lyra reminds us of the renewed interest in classical texts, including Hebrew and Greek, which preceded the Reformation and which, together with that movement, and with the invention of printing, provided the impetus for the production of Bible translation on a scale hitherto undreamed of. Nida himself has aptly summarised this ever accelerating translation activity in his introduction to *The Book of a Thousand Tongues*:

> Though the translation of the Old Testament was undertaken some two hundred years before Christ, when the Hebrew Scriptures were rendered into Greek, extensive translation of the Bible has been a relatively recent development. In fact, even by the time printing was invented, some 500 years ago, the Bible existed in only 67 languages. During the 19th century however, more than four hundred languages received some part of the Scriptures and within the first half of the 20th century some part of the Bible was published in more than 500 languages—an almost incredible

---

3 F.F. Bruce, *History of the Bible in English*, (3rd ed.; London: Lutterworth 1979) 17-19.

> undertaking and one in which the Bible Societies played a major role, having been responsible for the publication of at least some portion of the Scriptures in 1,153 languages.[4]

The 1,500 or so languages into which the Bible has now been translated represent 97% of the world's population.

The outstanding name in the production of the English versions is undoubtedly that of William Tyndale, scholar of Oxford and Cambridge, who eagerly pursued the new learning and set out to do for England what Luther had done for Germany and to make 'the boy who drives the plough in England know more of Scripture' than many a man of learning. However, failing to get patronage in England, he moved to the continent. There he had to move from Cologne to Worms, then to Marburg and later to Antwerp where King Henry VIII's agents finally arrested him. He was strangled and burnt at Vilvorde in 1536. Before his arrest, however, he had translated and published the Pentateuch, Jonah, a revised Genesis and a revised NT. Tyndale and his translations were vilified by authorities in church and state in England (including Sir Thomas More, then Lord Chancellor, in his *Dialogue Concerning Heresies*), and thousands of copies were publicly burnt. Nevertheless, when royal policy changed, and the translation of the Bible into English was finally authorized, the version which won the royal favour and was placed in every parish church in England was basically Tyndale's even though this was never acknowledged.

The years following repudiation of papal authority in England were marked by intense activity in Bible translation. Versions by Miles Coverdale and John Rogers (Matthews Bible) received royal licence in 1537. Both leaned heavily on Tyndale. Likewise the 'Great Bible' (1539) placed in every parish church was only a revised edition of Tyndale's version. The Geneva Bible (1560), dedicated to the new Protestant Queen, Elizabeth, was marked both by accurate scholarship and marginal comments expressing strong Reformed theology, as might be expected in a version produced in the city of Calvin and Beza. The Bishops Bible (1568) utilized many of the Geneva renderings but predictably removed the anti-prelate and aggressively Calvinistic glosses.

The wide circulation of other English versions provoked English Catholic scholars in France to produce the Rheims version of the NT (1582) and the Douai OT (1609). The Douai-Rheims Bible was rather literal in its translation of the Vulgate and much more

---

4 E.A. Nida, *The Book of a Thousand Tongues*, (2nd ed.; New York: United Bible Societies, 1972).

worthy of Nida's indictment—'Anglicized Latin'—than the KJV.[5] The Rheims translators, however, did provide a glossary explaining fifty eight of their Latin neologisms. Catholic doctrine was safeguarded in the section headings and in the marginal notes.[6]

The Authorized Version of 1611 (KJV)

That the non-Roman Catholic English-speaking world received one and the same English Bible as a common heritage was largely due to the sheer merit of the Authorized Version. But due credit must also be given to King James I who not only eagerly approved the idea that his accession be marked by a new translation of the Bible, but also insisted at the outset that it should be without divisive marginal notes. Very probably he was thinking not only of theological controversies within the Church of England but also of those 'democratic' and 'seditious' sentiments in the Geneva Bible. Whatever the King's own motives, the decision to produce the Authorized Version, or the King James Version, as the Americans call it, was a felicitous one. For wherever the English language is spoken, it has proved the Bible, par excellence, for over 350 years:

> No book has had an equal influence on the English people. Apart from all religious consideration, it gave to all classes alike, an idiom in which the deeper emotions of life could be recalled. It gave grace to the speech of the unlettered, and it entered into the style of the most ambitious writers. Its phrasing coloured the work of poets, and its language has so embedded itself in our national tradition that if the Bible is forgotten, a precious possession will be lost.[7]

As a translation, the KJV has continued to be the measuring rod for aspiring rivals:

> The King James Bible has been augmented but never superseded by new translations that aspire to, and undoubtedly in some measure achieve greater accuracy and readability, incorporating the insight of contemporary attitudes and scholars.[8]

In view of the dominant role of the KJV in the history of the English Bible, a brief note on its genesis is not inappropriate. The team of 47 men included most of England's leading biblical scholars. They were divided into six panels: three worked on the OT, two on the NT and one on the Apocrypha. When the panels had finished their task, the

---

5 E.A. Nida and C.R. Taber, *The Theory and Practice of Translation* , (Helps for Translators, No.8; Leiden: Brill, 1969) 19.

6 F.F. Bruce provides amusing examples of glosses reflecting both Protestant and Catholic prejudice: Tyndale on 32:35 comments, 'The Pope's bull slayeth more than Aaron's calf', whereas the Rheims version heading for Acts 8 reads: 'Simon Magus more religious than the Protestants'.

7 I. Evans, *A Short History of English Literature*, (London: Penguin, 1940) 195.

8 A. Newman, 'Evaluating Bible Translation — A Linguistic Approach,' *Forum* pp.28-29 (1978) 5.

draft translations of the whole Bible were reviewed by a smaller group of twelve men, two from each panel, before the work was sent to the printer.

The rules which guided them in their work were approved, if not actually devised by James himself. The Bishop's Bible was to serve as the basis for the new translation. But in practice all the existing English versions lay before the translators, plus every available foreign version—the Latin translation, the Targums and the Syriac Peshitta—all as aids to elucidate the original Hebrew and Greek texts.

As to the principles on which they based their translation, they are well stated in the preface, 'The Translators to the Reader'. This is seldom reprinted these days and must not be confused with the brief dedication, 'To the Most High and Mighty Prince James' though even this contains interesting information. It states the translators' desired to avoid extremes represented on the one hand by 'Popish persons at home or abroad' and on the other hand by 'self-conceited Brethren' of Puritan outlook.

The Preface to the Reader sets out to justify the general principle of Bible translations in the vernacular, and this work of translation in particular. Their debt to earlier English translation is acknowledged and it is claimed that their present concern is not 'to make a new translation, nor yet to make a bad one a good one...but to make a good one better, or of our many good ones one principal good one'. But they do not mention the man whose influence can be traced throughout so much of their work—William Tyndale.

They express forcefully their preference for idiomatic rather than literal translation in a passage frequently cited by Nida in defending his own DE theory and 'common language' Bibles.[9]

> Another thing we think good to admonish thee of, gentle Reader, that we have not tied ourselves to an uniformity of phrasing, or to an identity of words, as some peradventure would wish that we had done, because they observe, that some learned men somewhere have been as exact as they could that way. Truly, that we might not vary from the sense of that which we had translated before, if the word signified the same thing in both places (for there be some words that be not of the same sense every where), we were especially careful, and made a conscience according to our duty. But that we should express the same notion in the same particular word; for example, if we translate the Hebrew or Greek word once by *purpose,* never to call it *intent;* if onewhere *journeying*, never *travelling;* if onewhere *think*, never *suppose*; if one where *pain*, never *ache;* if one where *joy*, never *gladness,* etc., thus to mince the matter we thought to savour more of curiosity than wisdom, and that rather it would breed scorn in the atheist, than bring profit to the godly reader. For is the

---

9 E.A. Nida, 'The Nature of Dynamic Equivalence in Translating', *Babel*, Vol 23:3 (1977) 78

kingdom of God become words or syllables? Why should we be in bondage to them, if we may be free? Use one precisely, when we may use another no less fit as commodiously?...We might also be charged (by scoffers) with some unequal dealing towards a great number of good English words. For as it is written of a certain great Philosopher, that he should say, that those logs were happy that were made images to be worshipped, for their fellows, as good as they, lay for blocks behind the fire: so it we should say, as it were, unto certain words, Stand up higher, have a place in the Bible always; and to others of like quality, Get you hence, be banished for ever; we might be taxed peradventure with St Jame's words, namely, "To be partial in ourselves, and judges of evil thoughts". Add hereunto, that niceness in words was always counted the next step to trifling; and so was to be curious about 'names' too: also that we cannot follow a better pattern for elocution than God himself; therefore he using divers words in his holy writ, and indifferently for one thing in nature: we, if we will not be superstitious, may use the same liberty in our English versions out of Hebrew and Greek, for that copy or store that he hath given us.

Thus, in the KJV rendering of Romans 5 we read 'we...*rejoice* in hope of the glory of God (verse 2)...we *glory* in tribulations (verse 3)...and we also *joy* in God (verse 11)' where the italicised words represent the same Greek verb. By contrast the revisers of 1881 did not share the enthusiasm for skilful use of appropriate synonyms and rendered all three occurrence by 'rejoice'. The Preface makes it clear that the translators followed a middle course in rendering technical terminology:

> Lastly, we have on one side avoided the scrupulosity of the Puritans, who leave the old Ecclesiastical words, and betake them to other, as when they put *washing* for *baptism,* and *congregation* instead of *Church*; as also on the other side we have shunned the obscurity of the Papists, in their *azymes, tunike, rational, holocausts, prepuce, pasche,* and a number of such like, whereof their late translation is full, and that of purpose to darken the sense, that since they must needs translate the Bible, yet by the language thereof it may be kept from being understood. But we desire that the Scripture may speak like itself, as in the language of Canaan, that it may be understood even of the very vulgar.

The 'late translation' of the 'Papists' is the Rheims NT (1582) mentioned above. It is salutary to note that of the six examples of latinate vocabulary singled out for censure in the Preface, three subsequently passed into common currency (tunics, rational and holocausts). This fact needs to be remembered in assessing Nida's claim that the technical terms such as redemption and justification are merely Anglicized Latin that should have no place in a modern English translation of the Bible.

We have already noted Nida's appeal to the example of KJV whose translators affirmed that 'we have not tyed ourselves to a uniformity of phrasing, or to an identitie of words, as some peradventure would wish that we had done.' This usage of a variety of synonyms undoubtedly contributed to the generally excellent style of the KJV so superior to the wooden literalism of the later Revised Version (1881). Nida is

correct in interpreting the Preface to the Reader as a plea for the twin qualities that he himself advocates: readability and accuracy. The trouble is that these terms are not self-defining. We need further criteria to give them substance. These it seems have changed over the centuries. Certainly the KJV was not a 'dynamic equivalence' translation. It was not written in the popular, simple, everyday English. We are told, for instance, that its style was already archaic[10], perhaps deliberately so, at the time of publication. Just as the NT itself was originally written in a Greek[11] with many semitic features so the KJV could be said to be written in Hebraized English.[12] It was a FC version and whatever flexibility translators displayed in rendering common or indifferent diction they still retained the images and idioms from the biblical languages, thus making English readers familiar with Oriental modes of thought which were woven into the texture of the English Bible. More especially, the KJV translators:

> ...were constantly aware that it was the Bible that they were translating, with a definite community of themes and vocabulary of salvation, so that it was easy for the reader to recognize the important ideas and words relating to God's character and to the continuity of the history of salvation, wherever such ideas and words occurred.[13]

A comparison of an early edition of the KJV with those printed now, would reveal several differences. The spelling has been considerably modernized and other alterations have been introduced; all unauthorized, some intentional, some accidental, some good, some bad. Many of the early editions seem to have been very carelessly printed, the most notorious being the 'Wicked Bible' (1641) so called because of its omission of the word 'not' from the seventh commandment (for which scandalous negligence the King's printers were fined 300 pounds by Archbishop Laud). It was left for the two Cambridge editions (1629, 1638) to present accurately the text of King Jame's translators. With the passage of time, too the chapter summaries were abbreviated to short headings while the marginal references were expanded. In 1701 dates were introduced into the margin for the first time, largely based on the chronological works of Archbishop Ussher.

For the English speaking world, the KJV became the master translation and the subsequent attempts of other translators to improve upon it were destined to have but temporary and limited appeal.[14] A variety of translations and paraphrases appeared in the eighteenth and nineteenth centuries of which the most noteworthy was John

---

10 See Preface to the New English Bible, 1961.

11 See Chapter Twelve below on the NT Koine Greek.

12 A. Newman, 'Semantic Mapping of a text (Exodus 23:8),' *Meta*, Vol.23:2, 1978:161

13 D.W.B. Robinson *A Translation of the Bible for Public Worship* (Australian Anglican Bishops' Conference, April 1979) 2.

14 J. Hollander and F.Kermode, *The Oxford Anthology of English Literature* (London: Oxford University Press, 1973) 528-542.

Wesley's revised edition of the KJV with notes 'for plain unlettered men who understand only their Mother Tongue' (1768). Bruce cites a literary curio by the classicist Edward Harwood who produced a New Testament in the idiom of Hume and Johnson. His rendering of the opening words of the Lord's Prayer, 'Our Father who art in heaven: Hallowed be thy name', helps us to understand its speedy consignment to oblivion:

> O Thou great governor and parent of universal nature—who manifests thy glory to the blessed inhabitants of heaven—may all thy rational creatures in all parts of thy boundless dominion be happy in the knowledge of thy existence and providence and celebrate thy perfections in a manner most worthy of thy nature and perfective of their own.

Despite the many excellencies of the Authorized Version, the passage of time saw increasing pressure for revision. The English language had not stood still since 1611. But the weightiest consideration of all was provided by development in the field of textual studies. A growing scholarly consensus regarded the so-called 'Textus Receptus'[15] with which the KJV translators worked, as inferior. Nineteenth century textual critics concluded that it represented a 'Byzantine' text type stemming from later manuscripts which had in turn been copied inaccurately. A wealth of manuscripts discovered and researched in the nineteenth and twentieth centuries has enabled scholars to trace the textual history of the NT well back into the second century. Though it must be admitted that there is still debate as to whether the Alexandrian, Western, Caesarean or old Antiochian text-types most faithfully represents the original 'autographs'.[16]

These considerations found expression in several distinguished private ventures such as the translations of Dean Alford, Conybeare and Howson, and J.N. Darby, and finally gave rise to the official revision of the KJV in 1881. The initiative was taken by the Convocation of the Province of Canterbury in 1870 and subsequently both Anglican and Non-Conformist scholars were divided into two companies. The NT company took ten years while the OT company worked for fourteen years. Like their predecessors, the revisers of 1611, they received no remuneration for their arduous labours. The co-operation of parallel companies of American translators was arranged.

The ERV proved to be a 'schoolmaster's translation' that failed to satisfy the critics or to displace the KJV in popular affection, as we have noted. On the whole, the OT

---

15 *The Textus Receptus*—based on a twelfth-century manuscript amended by Erasmus and printed in 1515.

16 However, the distinguished editor of the RSV (1946) has claimed that 'out of the thousands of variant readings among the manuscripts there is still, as in 1881, nothing requiring a revision of Christian doctrine'. See F.C. Grant, *An Introduction to the Revised Standard Version of the New Testament*, (1946) 42.

revision, which followed the 1611 text more closely, was well received. But the NT revision was attacked on two scores—its quality as a translation, and the principles of textual criticism which it embodied. The second issue requires more attention than can be justified in this thesis. As regards the first, it is evident that the revisers' concern for formal concordance resulted in a version which knew nothing of the rhythm, cadence and euphony of good English. They were accused of ruining many of the loveliest passages in English literature. On the other hand it has been said that the stylistic elegance of the KJV is largely absent from the Greek original—a claim we shall return to in chapter twelve.

The Last Half-Century

The last hundred years have witnessed the publication of other 'revised' versions of the KJV removing what the editors regarded as obsolete usages, archaisms and Hebraisms, and taking into account the prevailing scholarship of the period. Thus the Jewish Publication Society published in 1917 *The Holy Scriptures According to the Massoretic Text* , whose debt to the KJV and ERV is obvious (though Christological overtones were pruned out). It remains the standard version used by Jews of all denominations. Most important of all was the *Revised Standard Version* (1946, 1952), produced by American scholars in fairly literary English acceptable on both sides of the Atlantic. This version made the strongest bid to replace the KJV. It is probably the most common version used in Australia and with the inclusion of the Apocryphal books it gained the approval of the Eastern Orthodox and Roman Catholic Churches as well as the Protestant community.

Since the publication of the RSV, over thirty more English Bibles have appeared plus an additional twenty six New Testament translations.[17] Very few of these have self-consciously resisted the swing to dynamic equivalence principles. The New King James Versions (NKJV) and the New American Standard Bible (NASB) are notable exceptions.

Of those which make a distinctive break with the KJV-RSV tradition, the most prominent are: the *New English Bible* (1970) undertaken by major British Christian bodies other than Roman Catholic; the Catholic *Jerusalem Bible* (1966) which was very much inspired by the popular Dominican *La Bible de Jerusalem* (1955); the *New Jewish Version* intended to replace the 1917 translation; the *Berkley Bible* or *Modern Language Bible* (1959); the American Bible Society's *Good News Bible* (*Today's English Version*) (1976) of which the NT section had already become a best seller—

---

17 D.A. Carson, 'New Bible Translations: An Assessment and Prospect', a paper delivered at the American Bible Society Symposium (1993) 37.

Good News for Modern Man (1966); Kenneth Taylor's paraphrase, *The Living Bible* (1971), which was so commercially successful as to earn an article in the Wall Street Journal;[18] the *New International Version* (1979) produced by the New York Bible Society and marking conservative Protestant dissatisfaction with the RSV; and finally the two most significant recent English versions the *Revised English Bible* (1989) and the *New Revised Standard Version* (1990).

Besides these products of scholarly panels working under the auspices of large organizations, mention should be made too of earlier monumental individual efforts such as those of J. Moffatt (1913, 1924), E.J. Goodspeed (1923), R.A. Knox (1949) and J.B. Phillips (1958, 1970).

It is clear from the Revised English Bible (REB) and the New Revised Standard Version (NRSV) that DE theory has had a profound influence even on translators who have not formally adopted Nida's views. The REB, a radical revision of the NEB, states that 'the guiding principle has been to seek a fluent and idiomatic way of expressing biblical writing in contemporary English. Much emphasis has been laid on correctness and intelligibility'. The NRSV likewise declares that the biblical message 'must be presented in language that is direct and plain and meaningful to people today.' In his important review of these two versions, Robert Bratcher, one of Nida's most prominent lieutenants, concludes that only the REB qualifies as a DE translation.[19] He cites Hilaire Belloc's criterion 'What would an Englishman have said to express this?' Yet the NRSV committee adopted the maxim 'As literal as possible, as free as necessary.' True Bruce Metzger claimed plausibly in 'To the Reader' that the NRSV remains essentially a literal translation but it is much less literal and more sensitive to DE priorities than the REB when it comes to issues of inclusive language.

Conclusion

Our review of the history of English Bible translation has noted two salient features: the increasing proliferation of new translations on the one hand and the continuing fascination of an archaic master version in the KJV on the other.

But in the last half century a remarkable reversal has taken place. Until the 1950s, English speaking readers who did not use the KJV would most likely have used the RV or ASV and increasingly the RSV—all formal correspondence versions. A drastic change then occurred revealing an overwhelming tendency to eschew the formal register of solemn worship and recital in favour of the natural, informal style of the

---

18 *Wall Street Journal*, March 1, 1974.

19 R.B. Bratcher, 'The Revised English Bible', *TBT* 43(1992) 342-348.

mass media. By 1990 over 80 million copies of the *Good News Bible (TEV)* NT were sold and over 30 million TEV Bibles. Likewise more than sixty million copies of the *New International Version* were also sold.[20] While the NIV is more conservative than the TEV its underlying philosophy of translation is not markedly different.

Clearly there has been a dramatic change both in popular expectation of what a translation should be like and in the approach of Bible translators themselves.

Our own focus is to be on the TEV not simply because of its phenomenal acceptance but because it represents the most conscious and consistent attempt to implement dynamic equivalence translation theory. Furthermore, as we shall see, the TEV has been vigorously and successfully promoted as a model for Bible translation worldwide.

---

20 These figures are supplied in J.P. Lewis, *The English Bible from KJV to NIV* (Grand Rapids: Baker, 1991).

CHAPTER TEN

THE GOOD NEWS BIBLE—ITS BACKGROUND, PURPOSE AND NATURE

The TEV was commissioned by the American Bible Society as a completely modern translation on a level of language that could be readily understood by any reader of English, regardless of his education. In 1966 the NT was published in paperback as *Good News for Modern Man.* OT portions appeared between 1970 and 1975. The complete Bible was ready for publication in 1976. Apart from its communicative language another important factor in its popularity has been the brilliant line drawing illustrations of the Swiss artist, Annie Vallotton. According to one of the seven OT translators, 'This was the first English translation to make consistent use of advances in general linguistics and in secular translation theory'.[21]

Nida has described how the story of the TEV begins not in the USA but in the extraordinary success of two other Common Language translations, in Latin America and Liberia.[22] In accordance with the principles expounded in William L. Wonderly's *Bible Translation for Popular Use,*[23] a Spanish *Version Popular* was first prepared for ten million Indians from northern Mexico to southern Chile. But it was soon discovered that this translation was even more popular in cities such as Mexico City, Bogota and Buenos Aires than among the Indians for whom it was designed. The success of a similar venture in Liberian English, (i.e. the form of English used in West Africa) provided further stimulus to attempt a translation in a more broadly based form of modern English.

The major responsibility for the translation fell to Robert G. Bratcher, a professional translator, who prepared a draft for the whole NT which was subsequently reviewed by a panel of scholars. Bratcher also served as chairman of the committee of six who produced the OT translation. Prior to joining the Bible Society Translation Staff he had experience as a lecturer in Greek and had also served as a missionary in Brazil where he had been involved in the revision of the famous *d'Almeida Portuguese* version of the Bible.

---

21 K. Crim, 'Versions, English', *IDB*, Supplementary Volume (Nashville: Abingdon, 1978) 936.

22 E.A. Nida, *Good News for Everyone: How to Use the Good News Bible*, (Waco, Texas: Word Books, 1977) 45f.

23 W.L. Wonderly, *Bible Translation for Popular Use* , (Helps for Translators, No. 7; London: United Bible Societies, 1968).

1. Common Language Version

Dr Bratcher himself has explained that the TEV is both a common language translation and a dynamic equivalence translation.[24] Not all DE translations are common language translations but all common language translations must be DE translations. Canon Phillips' translation of the NT (1958) has been acknowledged as the first modern DE translation in English but the language was more of a literary character because it was aimed at British university students. The TEV on the other hand, follows a simple level of English because, in accordance with DE theory, it has been restructured to fit in with the readership ability of a very different target audience. It originally set out to meet the needs of one billion people who speak English as a second language.[25] The preface to the fourth edition (1976) however, states that: 'This translation of the New Testament has been prepared by the United Bible Societies for people who speak English as their mother tongue or as an acquired language'. It is a Common Language Version and as such has a number of characteristics:

a. It deliberately avoids technical terms wherever possible
b. It is written, not spoken, English and so conforms to the written style of language
c. The vocabulary of the language is restricted but not artificially as in Basic English (which is not a living language)[26]
d. Difficult polysyllabic words and complex sentence constructions are avoided
e. Slang, regionalisms and provincialisms are avoided in an attempt to give universal appeal. Bratcher actually suggests that this is a kind of Koine English
f. Idioms are avoided for the same reasons. Idioms are vivid and effective for native speakers but may be unintelligible or misleading for non-native speakers.[27]

Common language has been defined as 'that part of the total resources of a given language common to the usage of both educated and uneducated'.[28] It is interesting to compare the TEV with a good literary translation like the NEB. A quick glance at the Psalms in the NEB, for instance, reveals many words which are not part of everyday speech in all classes of society: for example, myriads (3:6), profligacy (12:8),

---

24 R.G. Bratcher, 'The Nature and Purpose of the New Testament in Today's English Version,' *TBT* 22 (1971) 98-107

25 R.G. Bratcher, 'The Nature and Purpose of the New Testament in Today's English Version,' *TBT* 22 (1971) 106

26 Basic English is the simple form of the language produced by C.K. Ogden of the Orthological Institute and consisting of only 850 words. A Basic English Version of the Bible was produced by Prof. S.H. Hooke in 1949.

27 R.G. Bratcher, 'Translating the TEV New Testament', in SKILTON, J.H. and LADLEY, C.A., eds., 1978, 147-8.

28 W.L. Wonderly, *Bible Translation for Popular Use*, (Helps for Translators, No. 7; London: United Bible Societies, 1968) 3.

acclaims (27:6), calumnies (73:8). All these disappear in a common language version such as the TEV.

Sometimes a literary translation may use groups of words which are all simple or well-known, but which used together have a special sense. For example in Ps 4:1, NEB translates, 'Thou didst set me at large'. The TEV has 'You came to my help'. Again a literary translation may use sentences which not only contain uncommon words, but which are long and complicated. Educated people may have no difficulty with them but others may. Compare, for example, the NEB and TEV translations of 2 Cor 8:3-5a:

NEB	TEV
Going to the limit of their resources, as I can testify, and even beyond that limit, they begged us most insistently, and on their own initiative, to be allowed to share in this generous service to their fellow Christians. And their giving surpassed our expectations; for they gave their very selves, offering them in the first instance to the Lord, but also under God, to us.	I assure you, they gave us as much as they could. Of their own free will they begged us and insisted on the privilege of having a part in helping God's people in Judea. It was more than we could have hoped for; first they gave themselves to the Lord; and then by God's will, they gave themselves to us as well.

Both translations are modern in their language and in the methods by which the translators have worked. But whereas the NEB is written at a more literary level of language, the TEV is intended for anyone who reads English. Ellingworth[29] has spelled out three implications of common language Bible translation. First, a common language translation must use language which is up-to-date, that is, language spoken by people not more than about 35 years of age. It is intended for people who read English now, in this day and age. Hence the titles of DE translations read: *Today's English Version, Bonnes Nouvelles d'Aujourd'hui, Kabar Baik Masa Kini,* etc.

Secondly, a common language translation cannot use language which will be understood only by people who go to church. Non-churchgoers should be able to understand the message of the Bible even if they don't want to accept it. Common language translations avoid traditional, ecclesiastical language because they are intended for everyone.

---

29 P. Ellingworth, 'Exegetical Presuppositions in Translation', *TBT* 33:3 (1982) 317-323

Thirdly, a common language translation must be written in language that is natural to those who speak and write it as their mother tongue. For instance, FC translations such as the KJV reproduce features of the ST which are unnatural in English. A good example is the consistent translation of Mark's καί by 'and'. In the KJV Mark 1 has thirty two sentences beginning with 'And'. It was natural, apparently, for a Jewish writer like Mark to write this kind of Greek since it was normal to begin sentences with ו in Hebrew. It was not common in classical Greek and it is very unnatural in English, some would say, incorrect. Hence the NEB has only five sentences (in translating this chapter) beginning with 'And'; the TEV has only two.

2. A Dynamic Equivalence Version

The TEV follows a dynamic equivalence principle of translation not a formal equivalence principle. Bratcher cites Nida's succinct (but controversial) definition: 'To translate is to try to stimulate in the reader of the translation the same reaction to the text as the one the original author wished to stimulate in his first and immediate readers'. He reminds us, too, that the principle is not so novel as is sometimes thought. Luther, with customary vigour, claimed on translating the Pentateuch, 'I endeavoured to make Moses so German that no-one would suspect he was a Jew'. Support is also sought from Mgr Ronald Knox. 'A good translation is good in proportion as you can forget, while reading it, that it is a translation at all'.[30] It is doubtful however, that the works of either of these translators exhibited the amount of cultural adaptation that their stated principles demand. Bratcher singles out three features that mark the TEV as a DE translation: contextual consistency, naturalness and explicitness. We shall look at each feature in turn.

a. Contextual Consistency: That the TEV is DE translation is reflected firstly in its emphasis on contextual consistency over verbal consistency.[31] Bratcher's own example is the translation of οἱ Ἰουδαῖοι in the Gospel of John. He claims that to woodenly render it by 'the Jews' on every occasion is to misrepresent the meaning of the original. He analyzed out four different meanings of Ἰουδαῖος, in John's Gospel: 'Jewish people', 'Judaeans', 'people hostile to Jesus', and 'the Jerusalem authorities'.[32] His analysis is probably correct but as a translator he fails to come to terms with the author's own deliberate and absolute use of οἱ Ἰουδαῖοι which implies a certain attitude and perhaps a certain relationship to Judaism that gets lost in any focus on the nuances rather than the link concept.

---

30 R.G. Bratcher, 'The Nature and Purpose of the New Testament in Today's English Version', *TBT*, (1971) 99.

31 cf. E.A. Nida, *The Theory and Practice of Translation*, (Helps for Translators, No. 8; Leiden: Brill, 1969) 15f.

32 R.G. Bratcher, 'The Jews in the Gospel of John', *TBT*, 26 (1975) 401-409.

Nida and Bratcher acknowledge that the most controversial feature of the TEV has proved to be the decision not to translate Biblical terminology concordantly. In his popular introduction to the TEV *Good News for Everyone* ,[33] Nida devotes a whole chapter entitled 'Great Truths Made Clearer', to answering critics who attack the TEV's failure to reproduce such terminology. It is significant that Nida does not justify the TEV practice on the grounds that it is a common language translation but actually maintains the new renderings are superior. Terms such as 'expiation', 'justification', 'sanctification', 'predestination', are dismissed as not much more than Anglicized Latin! More plausibly he argues that words such as 'redemption', 'saints', 'propitiation', 'fear of God' and 'blood', are misleading to the modern reader.

The greatest number of criticisms[34] have been directed against the translation of the Greek αἷμα 'blood' by 'death' or its equivalent in eleven passages where Christ's sacrificial death is referred to—Acts 20:28; Rom 3:25; 5:9; Eph 1:7; 2:13; Col 1:20; Heb 10:19; 13:20; 1 Pet 1:19; Rev 1:5; 5:9. In a detailed defence of his renderings Bratcher again maintains there are four differing senses of αἷμα. Firstly, the word is often used to signify violent death, as also was the Hebrew word for blood (דָּם) in the OT. He cites Matt 27:24,25 where Pilate washes his hands before the crowd and says, 'I am innocent of the αἷμα of this man' and the crowd responds, 'May his αἷμα be upon us and our children'. Bratcher goes on to make the extraordinary claim:

> In English, however, the word 'blood' does not mean death; it means only the liquid that flows in the veins and arteries of men and animals. Such compound expression in English as 'bloodthirsty', 'bloodguiltiness', 'spilling blood', 'blood letting' do mean death but the simple word 'blood' alone does not. In translating Matt 27:24, 25, then, it is only natural that a common language translation that tries to be simple and clear for all readers will use 'death' in Pilate's statement and the crowd's reply; 'I am not responsible for the death of this man! This is your doing...'Let the punishment for his death fall on us and our children'. The same is true in Matt 23:25, which speaks of the murder of all innocent men...from the murder of innocent Abel to the murder of Zechariah... (see also Mat 23:30; 27:4; Luke 11:50, 51; 13:1; Acts 5:28; 22:20; Rom 3:15; Rev 6:10; 19:2).

Secondly, in two passages, αἷμα, he says, refers to spiritual death. Thus in Acts 18:6 Paul confronts the Jews in Corinth who are opposing him with words, 'Your αἷμα be upon your head; I am innocent' (cf. Acts 20:26). The TEV restructured this to, 'If you are lost, you yourselves must take the blame for it. I am not responsible'. Thirdly, where αἷμα refers literally to the blood of animals used in sacrifice, the appropriate translation is 'blood', as in Heb 9:7, 12, 13; 19:22, 25; 10:4; 13:11.

---

33 E.A. Nida, *Good News for Everyone, How to Use the Good News Bible*, (Waco, Texas: Word Books, 1977a)

34 R.G. Bratcher, 'The Nature and Purpose of the New Testament in Today's English Version', *TBT*, 22:97-107 (1971) 104. However we note that the recent revision of the GNB has reinstated 'blood' in a number of these passages.

Fourthly, there are contexts where αἷμα is used of Christ's sacrificial death and where the context makes clear the spiritual and symbolic nature of usage. In such passages as John 6:53-56, for instance, which speaks of drinking the blood of the Son of Man, or in others which speak of being cleansed by the blood of Christ, it is obvious from the context that 'blood' is not meant literally (cf. Heb 9:12, 14; 10:29; 13:12; 1 Jn 1:17; 5:6; Rev 7:14; 12:11; Matt 26:28; Mark 14:24; Luke 22:20; 1 Cor 10:16; 11:25, 27).

The whole question of 'Concordance' is a complex one and we shall return to it in chapter thirteen. But Bratcher, in following Nida here, adopts too narrow a view of context. It focuses attention on the sentence and loses sight of the broader context supplied by the author's writing and, in fact, that of the whole biblical corpus.

b. Naturalness in Language: Secondly, Bratcher points out that the TEV as a DE translation does not follow the word order or imitate the word classes of the Greek text, but seeks to express this meaning as naturally and as clearly as possible in English. Nida's classification of words into object, event, abstraction and relation enables the translator to better represent the meaning of the text. His example is Rom 1:17 which in FC translations reads: 'For in the gospel the righteousness of God is revealed from faith to faith. As it is written "He who through faith is righteous shall live".' The TEV rendering is more natural and clear: 'For the Gospel reveals how God puts people right with himself: it is through faith from beginning to end. As the Scripture says, "The person who is put right with God through faith shall live".'

The DE emphasis on naturalness has implications for stylistic features of the translation. Bratcher mentions a number of Greek or Semitic forms that require restructuring in the interests of clear idiomatic English.[35] Surprisingly, rhetorical questions have to be replaced by declarative statements lest the modern English reader assume that information is being sought. For example in Mark 8:37 instead of 'What shall a man give in exchange for his soul?' (KJV) the TEV has the assertion 'There is nothing a person can give to regain his life'.

Naturalness in translation demands also that Semitisms be identified and translated in such a way that the right meaning will be carried. Bratcher singles out the idiom 'son of' and the use of the passive as the reverential way of avoiding name God as the subject of the actions. Certainly the NT writers' use of υἱός (son) is 'Semitic rather than typically Greek'. In many cases 'son' expresses a quality or characteristic of a person mentioned. Thus 'sons of thunder' in Mark 3:7 is rendered 'men of thunder'

---

35 R.G. Bratcher, 'Translating the TEV New Testament', in SKILTON, J.H. and LADLEY, C.A., eds., 1978, 150.

by the TEV while 'sons of disobedience' in Eph 2:2 are 'people who disobey God'. These are clearly different from the usage in 'John, the son of Zechariah' (Luke 3:2) or 'Son of David' (Matt 15:22) where a physical relationship is signified.

It is assumed that these Semitisms did not represent a 'noise factor'[36] to the original receptor (whether because of their own Hebraic linguistic heritage or because of familiarity with the 'translationese' of the LXX) whereas if translated literally for the contemporary English reader they are apt to cause psychological and semantic noise. This is also true of the noun-noun genitive constructions (which are given dynamic equivalents in the TEV) whose relationship can be clarified by a verb or verb phrase. Here Nida's neo-Chomskian approach to grammatical analysis is utilized in making explicit the nature of the relationship in the ST and applying it in the transformation of the noun-noun genitive construction. Some common examples that cry out for analysis are: the love of God (1 John 4:9), the God of love (2 Cor 13:11), the gift of the Holy Spirit (Acts 2:38), the fear of the Jews (John 7:13), the faith of Jesus Christ (Rom 3:22), the God of peace (Phil 4:9), the peace of God (Phil 4:7), the knowledge of God (Col 1:10), the body of death (Rom 7:14) and the work of faith (1 Thess 1:3).

One scholar has pointed out that this Greek form of the genitive absolute construction is 'immensely versatile and hard-worked'[37] and a translator is likely to encounter a genitive phrase of this kind about twice in every three verses of the NT! Analysis is complicated by the fact that as usually two nouns are involved in the construction, it is not uncommon to find that one or both of them is an abstract noun. This means that the translator must clarify not only the function of the genitival relationship but also the function of the abstract noun/s. Again a significant percentage of the genitive constructions found in the NT involve figures of speech—one of the nouns may be figurative, such as 'light' or 'bowels' or 'way' or one of the nouns may be involved in a figure in addition to its being part of the genitive construction—e.g. Acts 14:27 'he had opened the door of faith' where 'opened the door' is an idiom, but door is connected with faith (an abstract noun) by the genitive. The metaphor has to be considered first and then the significance of the genitive may be studied within the metaphorical setting. Another complication is that the same genitive construction may have opposite meanings in different contexts. Thus 'the love of God', to take the usual example, may mean 'you love God' or 'God loves you'. Again, a similar genitive construction may have different senses as in 'the gospel of Jesus Christ' (Mark 1:1),

---

36 'Noise' in communication theory is any factor (including the receptor's lack of interest) which hinders effective understanding. In order to overcome noise DE practitioners introduce redundancy into the translation. See TAPOT 205-206.

37 C.F.D. Moule, *An Idiom-Book of New Testmanet Greek*, (Cambridge: Cambridge University Press, 1959) 37

'the gospel of God' (Rom 1:1) and 'the gospel of me' (Rom 2:16). The first probably means 'the gospel about Jesus Christ', the second 'the gospel which comes from God', and the third 'the gospel which I preach'. In each case the genitive signals different semantic relationships between the pairs of forms that are linked.

Another Semitism singled out for restructuring by Bratcher following Nida[38] is the so-called 'passive of divine avoidance'. FC translations have preserved the form of the ST, e.g. 'Judge not that you be not judged' (Matt 7:1) and 'Blessed are the merciful for they shall obtain mercy' (Matt 5:7). In the TEV, on the other hand, God is explicitly shown to be the subject of the action—'Do not judge others so that God will not judge you' and 'Happy are those who are merciful to others: God will be merciful to them' (cf. Matt 4:24; Luke 6:37-38). Nida claims the passive may be misunderstood. But was that not equally possible in the case of the original Greek speakers for whom these Jews wrote? It is surely arguable that if the Jews were accustomed to avoid the name of God by using a passive form, then this reverential attitude should be preserved in translation. Of course the grammar of some languages might dictate the use of the active voice (with the subject made explicit) but English does not.

Since we do not share the Semitic culture of the NT writers, the figurative use of words poses a special problem. Bratcher suggests that the metaphors must often be changed to similes or the figurative language abandoned altogether in the interests of clarity. He cites Luke 16:22 as an example where a literal translation would elude the modern reader. The FC translations read 'The poor man died and was carried by the angels to Abraham's bosom' (RSV). The TEV provides cultural conditioning to clarify the allusion—'The poor man died and was carried by the angels to Abraham's side, *at the feast in heaven'*. The justification here is that 'a literal translation tells nothing to the reader who does not know the way in which people at that time reclined at feasts, and does not realise that in Jewish circles the hereafter for the righteous was sometimes portrayed as a great banquet in heaven with Abraham as the host of God's people'.[39]

Other Semitic structures to be restructured in the TEV include 'son of perdition' (referring to Judas, John 17:12) which becomes 'the man who was bound to be lost'; 'to close up his bowels' (1 John 3:17 KJV) becomes 'closes his heart against his brother'; 'those who give suck' and 'breasts that never gave suck'; (Matt 24:19 and Luke 23:29 RSV) becomes 'mothers who have babies' and 'women who never bore babies, who never nursed them'.

---

38 E.A. Nida, *The Theory and Practice of Translation*, (Helps for Translators, No. 8; Leiden: Brill, 1969) 114.

39 R.G. Bratcher, 'The Nature and Purpose of the New Testament in Today's English Version', *TBT*, 22 (1971) 99.

Often, the TEV's naturalness does not distort the message, and the style, though hardly distinguished, is superior for modern readers. The translation of the parable of the Prodigal Son (Luke 15: 11-32) in RSV and TEVis a case in point.

c. Explicitness: A third feature of the TEV which marks it out as a DE translation; according to Bratcher, is its explicitness and provision of 'redundant information' which was available to the original readers but which is not necessarily shared by the modern reader. As an example he gives 'myrrh' in Mark 15:23 which the TEV identifies for the modern reader as '*a drug called* myrrh'; and 'Asia' in 1 Cor 16:19 which the TEV clarifies as '*the province of* Asia'.[40] By 'redundant information' then, is meant the provision of information which is implicit in the original message either because the writer and readers have certain shared knowledge or because the information may be understood from either the linguistic context or the non-linguistic context.

It has long been recognized in the history of translation, not only that there is implicit information in the original, but also that some of this implicit information has to be made explicit if the translation is to be understandable at all.[41] Ellipses are a prime example.[42] Thus the translators of the KJV found it necessary to clarify many ellipses though they used italics to show an English reader what was not overtly expressed in the original. E.g. 'and every *branch* that beareth fruit, he purgeth it, that it may bring forth more fruit' (John 15:2); 'her *that had been the wife* of Urias' (Matt 1:6); 'who has not bowed the knee to the *image of* Baal' (Rom 11:4); and 'If any of them that believe not bid you *to a feast*' (1 Cor 10:27). Subsequently the (English) Revised Version abandoned the practice. Its Preface (1884) stated 'that all such words as are plainly implied in the Hebrew and necessary in the English, be printed in common type.' English often demands the addition of the verb 'to be' where it is omitted in the Greek clause. All English versions supply the necessary copula. However, in epistolary formulas where the KJV and other FC versions were content to retain the form of the original (e.g. Rom 1:7 'To all that be in Rome') the TEV supplies the verb 'to write'—'And so I write to all of you in Rome'. Similarly in the benediction formulas of the NT letters where the RSV preserves the Greek form 'Grace to you and peace from God...' the TEV renders it 'May God our Father and the Lord Jesus Christ

---

40 R.G. Bratcher, 'The Nature and Purpose of the New Testament in Today's English Version', *TBT*, 22 (1971) 99; R.G. Bratcher (1978) 148.

41 J Beekman and J. Callow, *Translating the Word of God*, (Grand Rapids: Zondervan, 1974) Ch. 3.

42 E.A. Nida, *The Theory and Practice of Translation*, (Helps for Translators, No. 8; Leiden: Brill, 1969) 115.

give you grace and peace (e.g. in Rom 1:7; 1 Cor 1:3; 2 Cor 1:2; Eph 1:2; 6:23; 2 Thess 1:2; 2 Tim 1:18; Rev 1:4).

The TEV makes some of its references more explicit by adding classifiers. The original readers of the NT writing realized that Bethphage, Antioch and Rhegium were cities and that Saul, Tertullus and Lysias were persons. However, the TEV and other DE translations employ classifiers to make clear the reference of many unfamiliar proper names: *the river* Jordan, *a man called* Fortunatus, *the city of* Rhegium, *the town of* Puteoli, *cloth* linen and *sect* Pharisees, etc. Such classifiers 'provide a convenient device for building meaningful redundancy into an overloaded text'[43] and 'can be used whenever a borrowed words needs some semantic redundancy attached to it, so that the reader will be able to understand at least something of its form and/or function'.[44] Due to the historical and/or geographical importance of the biblical names they are usually transliterated rather than translated. (See Nida for a good treatment of problems involved.[45])

Provision of such contextual conditioning can be very helpful to the reader when there are distinct differences between the cultural forms of functions of the Biblical referents and the corresponding receptor language parallels. Bratcher points out that cultural matters such as weights, measures and hours of the day should be given their modern equivalents. No one today knows how far 'a Sabbath Day's journey' was or what the weight of a talent, or the length of a cubit, was. On the other hand to substitute modern currency results in obvious anachronisms. Footnotes can supply the additional information that will make the meaning clear to the reader.[46]

However the interpolation of supposedly implicit information can sometimes skew the text. Furthermore explicitness is an obsession of modern western culture as George Steiner[47] has pointed out. We shall return later to the subject of explicitness in translation.

---

43 E.A. Nida, *Toward a Science of Tranlsating*, (Leiden: Brill, 1964) 230.

44 E.A. Nida, *The Theory and Practice of Translation*, (Helps for Translators, No. 8; Leiden: Brill, 1969) 167.

45 E.A. Nida, *Toward a Science of Tranlsating*, (Leiden: Brill, 1964) 193-195.

46 R.G. Bratcher, 'Translating the TEV New Testament', in SKILTON, J.H. and LADLEY, C.A., eds., 1978, 151.

47 G Steiner, *On Difficulty and Other Essays* (Oxford University Press, 1978) 106f.

IV Some Issues Arising From The Implementation Of DE Theory

CHAPTER ELEVEN

DYNAMIC EQUIVALENCE TRANSLATIONS EXAMINED

Our focus to this point has been on the Good News Bible as the exemplification of DE theory in English. However, DE translations have appeared in many other major languages in the past twenty-five years including Spanish, Portuguese, French, Dutch, Indonesian, Malay, Javanese, Thai, Korean, Chinese, Japanese and Swahili, with many others planned. This reflects the complete commitment of the United Bible Societies to Nida's Dynamic Equivalence theory.[1]

It is noteworthy that as early as 1979 concern was being expressed in *The Bible Translator* , the major journal of the UBS, that national translators were reproducing in their own languages what were virtually literal translations of the GNB (or its French or Spanish equivalent).[2] Such a practice would of course be completely inconsistent with DE theory which emphasises naturalness in the receptor language.

In this chapter we will be examining seven representative Biblical texts, exemplifying seven different literary genres, with a view to noting and evaluating the characteristics of the GNB translation. At the same time we will compare recent Indonesian versions to investigate the influence, if any, of DE theory on the one hand and of the GNB on the other.

It is recognised of course that differences in translations spring not only from different theories of translation and different interpretations or stylistic decisions, but also from different views about textual problems in the available manuscripts. Our treatment will not enter into problems of textual criticism. Suffice it to note that the GNB is based on the UBS Greek New Testament (3rd edition 1975) and differs from that ST in only fifteen instances (a better approach than that of the NEB translators who decided the text to be followed as they proceeded). The following comments are based on the 1976 edition of the *Good News Bible* (British edition) which itself had undergone three revisions.[3]

---

1 E. Fry, 'Current Trends in Scripture Translation', *UBS Bulletin* 124/125, (1981) 3-16.

2 H. Fehderau, 'The Role of Bases & Models in Bible Translations', *TBT* 30 (1980) 401-419

3 A Fourth Revised Edition of the UBS Greek New Testament was published in 1993 with completely refurbished textual and punctuation apparatuses. Likewise there has been a new edition of the GNB (1994) but the modifications are not relevant to our discussion.

Indonesian versions have been chosen for comparison not only because I happen to be fluent in Bahasa Indonesia but also because of the significance of the language and of the Christian community in the world's fifth largest nation. Bahasa Indonesia is the national language for a nation of almost two hundred million people. It is the dialect of the Malay lingua franca that was chosen by Indonesian nationalists in the thirties and vigorously promoted by the Indonesian government after Independence (1946) to bring unity to the diverse peoples of the former Netherlands East Indies. Indonesia has the largest Muslim population in the world, but the Christian Churches have grown from three to twenty million members in the last thirty years.

Furthermore it is noteworthy that Dr Eugene Nida's input into Indonesian Bible translation goes back to the early 1950s. The Dutch scholar Dr J L Swellengrebel mentions Nida's valued presence at an important conference of Bible translators in Jakarta in 1952. In passing he mentions that it was at Nida's suggestion that New Testament selections were circulated among key informants as well as Old Testament selections 'for in his experience, as most people are more familiar with the NT, comments on this are more readily forthcoming from all sections of the community.' However, 'Dr Nida's experience was not borne out: more work was done on the Old Testament pieces than on those from the New Testament.' Swellengrebel speculates that this could be because there had latterly been more focus on the revision of the OT.[4] My own experience is that Westerners, not least Americans, undervalue the appeal of the Old Testament to traditional peoples, including Muslims.

The Three Indonesian Versions

1. Alkitab Bahasa Indonesia

This version commonly known as the *Terjemahan Lama* (TL) or 'Old Translation'was the work of two Dutchmen. It comprised an Old Testament translated in 1879 by H.C. Klinkert and a New Testament translated in 1938 by W.A. Bode. These two testaments were printed separately until 1958 when they were published together by the Lembaga Alkitab Indonesia (Indonesian Bible Society) with a Preface that anticipated a completely new Indonesian translation by 1968.

2. Alkitab Terjemahan Baru (1974)

Indonesia's political turmoil and civil war in the 1960s meant that the new translation took another sixteen years to complete (rather than the ten years foreshadowed in the Preface of the 1958 publication).

---

4 J. L. Swellengrebel, 'The Bible in Bahasa Indonesia', *TBT* 5:3 (1954) 130-136.

The New Translation (TB) was a formal correspondence version similar to the RSV in English but more modern. Traces of Nida's influence are already present, e.g., the paraphrase of Mark 1:4 using direct speech is a straight lift from *TAPOT*.

The TB gained immediate and widespread acceptance in the Indonesian churches where it became the standard version.

3. Alkitab Kabar Baik Dalam Bahasa Indonesia Sehari-hari (1985)

In July 1977 the Indonesian Bible Society (LAI) in conjunction with the United Bible Societies (UBS) launched a dynamic equivalence translation of the New Testament entitled *Kabar Baik Masa Kini* 'Good News for Today'. This was followed in 1985 by the publication of the whole Bible, *Alkitab Kabar Baik Dalam Bahasa Indonesia Sehari-hari* (BIS), a project in which the Roman Catholic Biblical Institute cooperated, as well as the UBS from which the main impetus came.

The main translator was the UBS consultant Dr Daniel Arichea, a Filipino scholar and protege of Dr Eugene Nida.

In 1985 LAI embarked on a massive four month campaign to promote the new DE translation which centred on 17 cities throughout the Indonesian archipelago. The indefatigable Eugene Nida himself gave lectures on translation theory and practice in four cities and was very effective in promoting the work of LAI and the new DE version in particular.

Dr Arichea and an Indonesian colleague have described the planning and strategy that went into the promotion of BIS in the face of suspicion and negativity towards it. He acknowledged that 'most Indonesian Christians are very fond of the standard translation of 1974, which is a formal correspondence translation.'[5] So the approach adopted

> was to promote the common language translation not in lieu of, but in addition to the standard translation that is already loved and used, in order to gain acceptance for it. The tendency of translation people is to speak very highly of DE translations to the extent of implicitly ridiculing FC translation. There is of course some justification for such enthusiasm. The idea of dynamic or functional equivalence translations is like the biblical pearl of great price: once a person finds out how valuable it is,

---

5 D.C. Arichea, & M.K. Sembiring, , 'Promoting A Common Language Translation', *The Bible Distributor*, 27, (October-November 1986) reprinted in the SIL publication *Notes on Scripture in Use*. (Dallas, SIL 1987) 12.

> that person tends to leave all other translations in favour of the newly found treasure.[6]

The writers seem completely innocent of any sense of UBS imperialism/paternalism as does the SIL editor who reprinted the article for the benefit of Wycliffe Bible Translators.

---

6 D.C. Arichea, & M.K. Sembiring, , 'Promoting A Common Language Translation', *The Bible Distributor*, 27, (October-November 1986) reprinted in the SIL publication *Notes on Scripture in Use*, (Dallas, SIL 1987) 14.

TEXT 1 GENESIS 1:1-8

MT

[ס א] 1 1 בְּרֵאשִׁית[a] בָּרָא אֱלֹהִים אֵת הַשָּׁמַיִם וְאֵת הָאָרֶץ׃ 2 וְהָאָרֶץ
הָיְתָה תֹהוּ וָבֹהוּ וְחֹשֶׁךְ עַל־פְּנֵי תְהוֹם וְרוּחַ אֱלֹהִים מְרַחֶפֶת עַל־פְּנֵי
3 4 הַמָּיִם׃ 3 וַיֹּאמֶר אֱלֹהִים יְהִי אוֹר וַיְהִי־אוֹר׃ 4 וַיַּרְא אֱלֹהִים אֶת־
5 הָאוֹר כִּי־טוֹב וַיַּבְדֵּל אֱלֹהִים בֵּין הָאוֹר וּבֵין הַחֹשֶׁךְ׃ 5 וַיִּקְרָא
אֱלֹהִים ׀ לָאוֹר יוֹם וְלַחֹשֶׁךְ קָרָא לָיְלָה וַיְהִי־עֶרֶב וַיְהִי־בֹקֶר יוֹם
6 אֶחָד׃ פ 6 וַיֹּאמֶר אֱלֹהִים יְהִי רָקִיעַ בְּתוֹךְ הַמָּיִם וִיהִי מַבְדִּיל
7 בֵּין מַיִם לָמָיִם[a]׃ 7 וַיַּעַשׂ אֱלֹהִים אֶת־הָרָקִיעַ וַיַּבְדֵּל בֵּין הַמַּיִם אֲשֶׁר
8 מִתַּחַת לָרָקִיעַ וּבֵין הַמַּיִם אֲשֶׁר מֵעַל לָרָקִיעַ [a]וַיְהִי־כֵן[a]׃ 8 וַיִּקְרָא
אֱלֹהִים לָרָקִיעַ שָׁמָיִם וַיְהִי־עֶרֶב וַיְהִי־בֹקֶר יוֹם שֵׁנִי׃ פ

LXX

1 Ἐν ἀρχῇ ἐποίησεν ὁ Θεὸς τὸν οὐρανὸν καὶ τὴν γῆν. 2 ἡ δὲ γῆ ἦν ἀόρατος καὶ ἀκατασκεύαστος, καὶ σκότος ἐπάνω τῆς ἀβύσσου καὶ πνεῦμα Θεοῦ ἐπεφέρετο ἐπάνω τοῦ ὕδατος. 3 Καὶ εἶπεν ὁ Θεὸς, Γενηθήτω φῶς. καὶ ἐγένετο φῶς. 4 Καὶ εἶδεν ὁ Θεὸς τὸ φῶς, ὁτι καλόν· καὶ διεχώρισεν ὁ Θεὸς ἀνὰ μέσον τοῦ φωτὸς καὶ ἀνὰ μέσον τοῦ σκότους. 5 Καὶ ἐκάλεσεν ὁ Θεὸς τὸ φῶς ἡμέραν, καὶ τὸ σκότος ἐκάλεσεν νύκτα. Καὶ ἐγένετο ἑσπέρα, καὶ ἐγένετο πρωί ἡμέρα μία. 6 Καὶ εἶπεν ὁ Θεὸς, Γενηθήτω στερέωμα ἐν μέσῳ τοῦ ὕδατος καὶ ἔστω διαχωρίζον ἀνὰ μέσον ὕδατος καὶ ὕδατος. καὶ ἐγένετο οὕτως. 7 Καὶ ἐποίησεν ὁ Θεὸς τὸ στερέωμα, καὶ διεχώρισεν ὁ Θεὸς ἀνὰ μέσον τοῦ ὕδατος, ὃ ἦν ὑποκάτω τοῦ στερεώματος, καὶ ἀνὰ μέσον τοῦ ὕδατôς τοῦ ἐπάνω τοῦ στερεώματος. 8 Καὶ ἐκάλεσεν ὁ Θεὸς τὸ στερέωμα οὐρανόν. καὶ εἶδεν ὁ Θεὸς ὅτι καλόν. καὶ ἐγένετο ἑσπέρα καὶ ἐγένετο πρωί, ἡμέρα δευτέρα.

The Hebrew Source Text (MT)

The Bible opens with an apparent prose description of God's creation. Oral reading, however, alerts one to the highly self conscious use of language that we normally associate with poetry. The very structure of the cola drive home the orderliness and systematic progression of God's activity:

God said: Let there be light! and there was light.
God saw the light: that it was good.
God separated the light from the darkness.
God called the light: Day! and the darkness he called: Night (1:3-5)

The repetition of the subject 'God' plus verb enable us to experience the deliberateness and the order that the text describes.

As we read the rest of the chapter we realise that the repetition of 'God' (32 times in 31 verses) and 'earth' (19 occurrences) is highly significant.

The passage we are studying is part of the literary unit Gen 1:1-2:3 whose distinctive structure has been noted by many commentators.[7]

This literary structure focuses on the earth and its progressive development from its initial stage of תהו ובהו to one of productivity and habitation as a result of a series of divine fiats.

The literary structure then is as follows:

Genesis 1:2	The earth unproductive and uninhabited		
[Day 1]	light and darkness	[Day 4]	sun and moon
[Day 2]	two waters	[Day 5]	fish and birds
[Day 3]	earth and seas vegetation	[Day 6]	animals and man on earth

Thus the account of creation in Gen 1:1-2:3 follows a pattern such that the earth 'unproductive and empty' becomes the earth productive with vegetation and inhabited by animals and man, all as a result of God's creative words. Awareness of this general literary structure and standpoint of the whole should inform the interpretation of the individual parts.

The Septuagint Translation (LXX)

This, the oldest translation and most significant commentary on the Hebrew text, is not straightforward Koine Greek. At its most idiomatic it abounds with Hebraisms; at its worst it degenerates to Hebrew in Greek guise. Nevertheless the Pentateuch attains a high standard of translation. It is somewhat idiomatic but faithful and consistent.

---

7 e.g. I.M. Kikawada & A. Quinn, *Before Abraham Was: The Unity of Genesis 1-11*, (Nashville: Abingdon, 1985) 78f, and G.Wenham, *Genesis 1-15* (WBC) (Waco: Word Books, 1987) 5-10.

The translation of Genesis was neither slavish nor extremely free. It is less literal than Jeremiah (which seems to have a different Hebrew *Vorlage*) but not nearly as free as Isaiah.[8]

Thus comparing the LXX with the MT in the first eight verses the differences are minute. For example, the subject of ποιέω is ὁ Θεός whereas the Hebrew (MT) simply has an unarticulated אלהים. The renderings are consistent and even the Hebrew word order is virtually intact. This of course is not so remarkable in a highly inflected language such as Greek as it would be in others such as English where meaning depends far more on word order.

The second creative word (in verse 6) calls forth a στερέωμα. Here it renders the MT's רקיע as in all seven occurrences, perhaps suggesting that the expanse is solid.

In verse 2 the use of ἀόρατος καὶ ἀκατασκεύαστος ("invisible and unorganized") to describe the state of the earth retains something of the onomatopoeia in the Hebrew description.

The one clear deviation from the MT is the placing of the ending formula καὶ ἐγένετο οὕτως at the end of verse 6 instead of at the end of verse 7. Cook has noted that many of the LXX deviations from the MT in Genesis 1 occur in connection with water and suggests the LXX could represent the original Hebrew reading that has been modified by the MT to counter any interpretation reflecting Ancient Near Eastern cosmogonies that regard water as the *Urform* in the creation process. However to speculate on any pattern in the minor discrepancies between the MT and LXX Genesis is beyond our purpose here.

---

8 For interesting data see J. Cook, 'The Exegesis of the Greek Genesis', in C. E. Cox (Ed.) *LXX*, (Atlanta, Georgia: Scholars Press, 1987) 91-125.

RSV 1952

1. In the beginning God created[a] the heavens and the earth. [2]The earth was without form and void, and darkness was upon the face of the deep; and the Spirit[b] of God was moving over the face of the waters.
[3]And God said, "Let there be light"; and there was light. [4]And God saw that the light was good; and God separated the light from the darkness. [5]God called the light Day, and the darkness he called Night. And there was evening and there was morning, one day.
[6]And God said, "Let there be a firmament in the midst of the waters, and let it separate the waters from the waters." [7]And God made the firmament and separated the waters which were under the firmament from the waters which were above the firmament. And it was so. [8]And God called the firmament Heaven. And there was evening and there was morning, a second day.

GNB 1976
The Story of Creation

1. In the beginning, when God created the universe,[a] [2]the earth was formless and desolate. The raging ocean that covered everything was engulfed in total darkness, and the power of God[b] was moving over the water. [3]Then God commanded, "Let there be light"—and light appeared,. [4]God was pleased with what he saw. Then he separated the light from the darkness, [5]and he named the light "Day" and the darkness "Night". Evening passed and the morning came—that was the first day.
[6--7]Then God commanded, "Let there be a dome to divide the water and to keep it in two separate places"—and it was done. So God made a dome, and it separated the water under it from the water above it. [8]He named the dome "Sky". Evening passed and morning came—that was the second day.

We come now to the two most significant English versions of this century: the Revised Standard Version (RSV) and the Good News Bible (GNB).

The Revised Standard Version (1952)(RSV)

The RSV like the LXX Pentateuch is a formal correspondence translation reproducing as far as English allows, the formal features of the ST. Just as the LXX rendered the Hebrew ו-consecutive consistently by καί so we find many of the English verses in the RSV beginning unnaturally with 'and'.

One deviation from the Hebrew ST that we now take for granted in all modern versions is the use of verses (and paragraphs) rather than the original lines or "cola" based on natural speech with each representing a unit of breathing and meaning.

The RSV then follows the Hebrew closely preserving the structure and repetitions (motifs) of the ST.

The one infelicity is the use of the traditional but obscure 'firmament' following Jerome's *firmamentum*. The Latin term was at least an abstract noun like the Hebrew רקיע which it translates. The term רקיע means anything 'hammered out' or 'stretched out' and can be used metaphorically (cf. Is 42:5; Ps 136:6). In modern parlance the word 'expanse' would fit the context well.

The Good News Bible (1976)(GNB)

Verse 1 The GNB translation of Gen 1:1 reveals the abandonment not only of traditional language but also traditional interpretations:

> In the beginning when God created the universe...

The GNB rendering assumes that ראשׁית is a construct and therefore treats the first verse as a dependent temporal clause—"in the beginning-of-the-creating of God"—rather than as an independent statement.

The GNB interpretation is not novel. It was proposed by Ibn Ezra, taken up by Rashi, and has been adopted by a number of scholars such as T.J. Meek and James Moffatt this century. It appears as a footnote in the RSV as an alternate interpretation. Those who support it can point out that most of the 50 occurrences of ראשׁית in the OT are construct. The form itself is capable of either construction so the decision has to be made on other grounds.

In favour of the traditional interpretation[9] we note:

1. Context seems to favour the use of the absolute. The verb בּרא in the Qal is used exclusively of 'divine activity'. The subject is always God and never man. The idea of a novel or extraordinary result seems frequently to be implied. The verb is used with accusative of the product created but there is no mention of material employed. Thus we read that God created (בּרא) man, but never that God created man from the dust of the ground.

2. The Masoretes understood the word to be in the absolute case and accented ראשׁית with the disjunctive Tipeha.

3. All the ancient versions including the LXX took the noun as an absolute.

---

9 For a fuller treatment, see G.J. Wenham, *Genesis 1–15* (WBC) (Waco: Word Books, 1987) 11-14.

Also in verse 1 the GNB replaces the RSV's 'the heavens and the earth' with 'the universe'. 'Universe' might be a reasonable rendering of שמים but the dropping of the ארץ from the translation is regrettable. As we have noted 'earth' is a motif of Genesis 1 occurring 18 times.

Verse 2 The GNB rendering of verse two is less neutral than the MT, LXX and RSV. 'Desolate' has a strong negative connotation; 'the deep' has become a 'raging ocean'; all is now 'engulfed in' 'total darkness'.

The second clause is inverted and given a passive structure.

In the third clause the 'power of God' has replaced 'the Spirit of God' moving over [the face of] the water. The possibility of understanding רוח אלים as 'divine wind' or 'breath of God' is a possible interpretation preserved in the LXX's unarticulated πνεῦμα Θεοῦ.

Verse 3 GNB introduces some stylistic variety: 'commanded' replaces 'said' and 'appeared' replaces 'there was'.

Verse 4 GNB replaces 'And God saw that the light was good' with 'God was pleased with what he saw', i.e. a statement that purports to be about objective reality has become a comment on God's feelings.

One reference to 'God' is replaced by a pronoun.

Verse 5 'God' is again replaced by 'he'. The verb is not repeated as it is in the MT.

The GNB'S 'evening passed and morning came—that was the first day' is more natural English.

Verses 6 and 7 The GNB contracts these two verses from the RSV's forty eight words to forty one—even though it brings forward 'and it was done' from the end of v.7 to the end of v.6 following the LXX rather than the MT.

Verse 8 The GNB drops another 'God'. It also replaces the archaic 'firmament', (that came into the English Bible via Jerome's 'firmamentum' which could be understood figuratively i.e. 'expanse' as in the Hebrew original) with something definitely firm and shaped—'a dome'; שמים becomes 'sky' instead of 'heaven'.

The more idiomatic 'Evening passed and morning came—that was the second day' again closes the section.

THE INDONESIAN VERSIONS

TL 1958

1. Bahwa pada mula pertama didjadikan Allah akan langit dan bumi.
2Maka bumi itu lagi tjampurbaur adanja, jaitu suatu hal jang ketutupan kelam-kabut; maka Roh Allah berlajang-lajang diatas muka air itu.
3Maka firman Allah: Hendaklah ada terang. Lalu terangpun djadilah.
4Maka dilihat Allah akan terang itu baiklah adanja, lalu ditjeraikan Allah terang itu dengan gelap.
5Maka dinamai Allah akan terang itu siang dan akan gelap itu malam. Setelah petang dan pagi, maka itulah hari jang pertama.
6Maka firman Allah: Hendaklah ada suatu bentangan pada sama tengah air itu, supaja ditjeraikan-nja air dengan air.
7Maka didjadikan Allah akan bentangan itu serta ditjeraikannjalah air jang dibawah bentangan itu dengan air jang djatas bentangan; maka djadilah demikian.
8Lalu dinamai Allah akan bentangan itu langit. Setelah petang dan pagi maka itulah harj jang kedua.

TB 1974
Allah mentjiptakan langit dan bumi serta isinja 1:1-2:7

1. Pada mulanya Allah mentciptakan langit dan bumi. 2Bumi belum berbentuk dan kosong; gelap gulita menutupi samuderaraya, dan Roh Allah melayang-layang2 di atas permukaan air. 3Berfirmanlah Allah: „Jadilah terang." Lalu terang itu jadi. 4Allah melihat bahwa terang itu baik, lalu dipisahkanNyalah terang itu dari gelap. 5Dan Allah menamai terang itu siang, dan gelap itu malam. Jadilah petang dan jadilah pagi, itulah hari pertama. 6Berfirmanlah Allah: „Jadilah cakrawala ditengah segala air untuk memisahkan air dari air." 7Maka Allah mendjadikan cakrawala dan la memisahkan air yang ada dibawah cakrawala itu dari air yang ada di atasnya. Dan jadilah demikian. 8Lalu Allah menamai cakrawala itu langit. Jadilah petang dan Jadilah pagi, itulah hari kedua.

BIS 1985
Riwayat penciptaan alam semesta

1. Pada mulanya, waktu Allah mulai menciptakan alam semesta, 2 bumi belum berbentuk, dan masih kacau-balau. Samudra yang bergelora, yan menutupi segala sesuatu, diliputi oleh gelap gulita, tetapi kuasa Allah bergerak di atas permukaan air. 3Allah berkata. "Jadilah terang!" Lalu ada terang. 4Allah senang melihat hal itu. Lalu dipisahkannya terang itu dari gelap, 5 dan dinamakannya terang itu "Siang" dan gelap itu "Malam". Malam lewat, dan jadilah pagi. Itulah hari yang pertama. 6-7Kemudian Allah berkata, "Jadilah sebuah kubah untuk membagi air itu menjadi dua, dan menahannya

dalam dua tempat yang terpisah." Lalu hal itu terjadi. Demikianlah Allah membuat kubah yang memisahkan air yang ada di bawah kubah itu dari air yang ada di atasnya. 8Kubah itu dinamakannya "Langit". Malam lewat dan jadilah pagi. Itulah hari yang kedua.

Terjemahan Lama (1879/1958)(TL)

The TL (1958) preserves the formal features of the Hebrew but uses an archaic form of Malay-Indonesian.

The ו-consecutive in the ST is regularly translated by the connective *maka* 'so' except for verse 8 where *lalu* 'then' is used.

The use of the preposition *akan* before the object of the verb would now be regarded as old fashioned.

Terjemahan Baru (1974)(TB)

The TB (1974) is also a fairly formal correspondence version but uses a more modern Indonesian. Thus the translators felt free not to render the Hebrew ו-consecutive or variously used *maka, lalu* or *dan*.

Bahasa Indonesia Sehari-hari (1985)(BIS)

BIS (1985) the dynamic equivalence version reproduces the main features of the GNB.

Verse 1 BIS in fact is a straight translation of GNB. Thus the opening verse is no longer taken to be the main clause. It is a temporal clause subordinate to the main clause in verse 3. (Verse 2 is a parenthetic comment.)

As we have seen the syntactic relationship of verse 1 to verse 2 is problematic. Theologically the adoption of the GNB rendering is significant because it presupposes the existence of chaotic pre-existent matter before the work of creation began. Previous Indonesian and Malay translations had accepted the traditional interpretation going back to the LXX.

BIS likewise follows GNB in ignoring the 'earth' motif (eighteen occurrences in Chapter 1). 'The heavens and the earth' are replaced with *alam semesta* 'the universe'.

Verse 2 BIS is also a straight translation of the GNB except that 'the face of' has not been dropped. The reproduction of the GNB's exaggerated rendering arguably imports from the West the Chaos theory not present in the ST.

Verse 3 BIS replaces the traditional *berfirman* with the verb of ordinary speech *berkata* , something no Indonesian I know would ever use where *Allah* is the subject.

It could be argued that the Hebrew does not distinguish between God speaking and human speaking. But Bahasa Indonesia knows no such egalitarianism and in a translation that supposedly espouses **naturalness** *berkata* jars.

Verse 4 BIS echoes GNB's 'God was pleased with what he saw'

Verse 5 BIS follows GNB in dropping *Allah* from the text and in not capitalizing pronouns representing God. Like the GNB it obscures the chiasmus of the ST (cf. verses 10, 20).

Verses 6-7 BIS follows GNB in conflating and paraphrasing these two verses. GNB's 'dome' (*kubah*) is also appropriated.

Verse 8 *Allah* is again replaced by the pronoun as in GNB. But BIS does exercise independence in rendering the verb by a passive which is arguably more natural in Indonesian.

Concluding Comment:

The strong interest in Biblical narrative and its techniques that has developed over the past 20 years or so[10] has brought a new appreciation of the arrangement of the text in its final form. New journals such as *Semeia, JSOT* and *Prooftexts* have provided a torrent of articles tracing the art of the Genesis stories from the perspective of the new literary criticism. The use of repetition, formulae, key words, chiasmus and other groupings are now seen as important for understanding the text which no doubt was a tract for its own times sharing some, and challenging other, ancient assumptions about the nature of God, the world and humanity.

It could be argued that the neglect of the formal features of the text that often characterizes the GNB reflects the preoccupation of the modern Western translator with the MEANING (i.e.information) in the ST. It is regrettable if this modern Western preoccupation is then imposed on non-Western readers who may not have recourse to a second, FC translation to evaluate the received tradition.

---

10 e.g. D. Clines, *The Theme of the Pentateuch* , (Sheffield: JSOT, 1978)

TEXT 2 2 SAMUEL 7: 1-17

MT

7 1 וַיְהִי כִּי־יָשַׁב הַמֶּלֶךְ בְּבֵיתוֹ וַיהוָה ᵃהֵנִיחַ־לוֹ מִסָּבִיב מִכָּל־
2 אֹיְבָיו: 2 וַיֹּאמֶר הַמֶּלֶךְ אֶל־נָתָן הַנָּבִיא רְאֵה נָא אָנֹכִי ׳יוֹשֵׁב בְּבֵית
3 אֲרָזִים וַאֲרוֹן הָאֱלֹהִים יֹשֵׁב בְּתוֹךְ הַיְרִיעָה: 3 וַיֹּאמֶר נָתָן אֶל־הַמֶּלֶךְ
4 כָּל אֲשֶׁר בִּלְבָבְךָ לֵךְ ᵉעֲשֵׂה כִּי יְהוָה עִמָּךְ: ס 4 וַיְהִי בַּלַּיְלָה
5 הַהוּא ᵉוַיְהִי דְּבַר־יְהוָה אֶל־נָתָן לֵאמֹר: 5 לֵךְ ׳וְאָמַרְתָּ אֶל־עַבְדִּי
6 אֶל־ᵃדָּוִד ᵇכֹּה אָמַר יְהוָה הַאַתָּה ᶜתִּבְנֶה־לִּי בַיִת ᵈלְשִׁבְתִּי: 6 כִּי לֹא
יָשַׁבְתִּי בְבַיִת לְמִיּוֹם הַעֲלֹתִי אֶת־בְּנֵי יִשְׂרָאֵל מִמִּצְרַיִם ᵃוְעַד ׳הַיּוֹם
7 הַזֶּה וָאֱהִיֶה מִתְהַלֵּךְ בְּאֹהֶל וּבְמִשְׁכָּן: 7 בְּכֹל ᵃאֲשֶׁר־הִתְהַלַּכְתִּי
בְּכָל־בְּנֵי ᵇיִשְׂרָאֵל הֲדָבָר ᶜדִּבַּרְתִּי אֶת־אַחַד שִׁבְטֵי יִשְׂרָאֵל אֲשֶׁר
צִוִּיתִי לִרְעוֹת אֶת־עַמִּי ׳אֶת־ᵈיִשְׂרָאֵל לֵאמֹר לָמָּה לֹא־בְנִיתֶם לִי בֵּית
8 אֲרָזִים: 8 ׳וְעַתָּה כֹּה־תֹאמַר לְעַבְדִּי לְדָוִד ᵉכֹּה ׳אָמַר יְהוָה ׳צְבָאוֹת
אֲנִי לְקַחְתִּיךָ מִן־הַנָּוֶה מֵאַחַר ᵇהַצֹּאן לִהְיוֹת נָגִיד ᶜעַל־ᵈעַמִּי ᵉעַל־
9 יִשְׂרָאֵל: 9 וָאֱהִי עִמְּךָ בְּכֹל ׳אֲשֶׁר הָלַכְתָּ וָאַכְרֵתָה אֶת־כָּל־אֹיְבֶיךָ
10 מִפָּנֶיךָ וְעָשִׂתִי לְךָ שֵׁם גָּדוֹל ᵉכְּשֵׁם הַגְּדֹלִים אֲשֶׁר בָּאָרֶץ: 10 וְשַׂמְתִּי
׳מָקוֹם לְעַמִּי ׳לְיִשְׂרָאֵל ᵉוּנְטַעְתִּיו ׳וְשָׁכַן תַּחְתָּיו וְלֹא יִרְגַּז עוֹד וְלֹא־
11 יֹסִיפוּ בְנֵי־עַוְלָה ׳לְעַנּוֹתוֹ כַּאֲשֶׁר בָּרִאשׁוֹנָה: 11 וּלְמִן ᵃהַיּוֹם ᵇאֲשֶׁר
צִוִּיתִי שֹׁפְטִים ׳עַל־עַמִּי ᶜיִשְׂרָאֵל וַהֲנִיחֹתִי לְךָ מִכָּל־אֹיְבֶיךָ ׳וְהִגִּיד
12 לְךָ ׳יְהוָה כִּי־בַיִת יַעֲשֶׂה־לְּךָ יְהוָה: 12 כִּי | יִמְלְאוּ יָמֶיךָ ׳וְשָׁכַבְתָּ
אֶת־ᵃאֲבֹתֶיךָ וַהֲקִימֹתִי אֶת־זַרְעֲךָ ׳אַחֲרֶיךָ אֲשֶׁר יֵצֵא מִמֵּעֶיךָ ׳וַהֲכִינֹתִי
13 אֶת־מַמְלַכְתּוֹ: 13 הוּא ᵃיִבְנֶה־בַּיִת לִשְׁמִי ׳וְכוֹנַנְתִּי אֶת־כִּסֵּא ׳מַמְלַכְתּוֹ
14 עַד־עוֹלָם: 14 ׳אֲנִי אֶהְיֶה־לּוֹ לְאָב וְהוּא יִהְיֶה־לִּי לְבֵן ᵃאֲשֶׁר ׳בְּהַעֲוֹתוֹ

15 וְהֹכַחְתִּיו ׳בְּשֵׁבֶט אֲנָשִׁים וּבְנִגְעֵי בְנֵי־אָדָם: 15 וְחַסְדִּי לֹא־יָסוּר ᵃמִמֶּנּוּ
16 כַּאֲשֶׁר הֲסִרֹתִי ᵇמֵעִם שָׁאוּל ᵇᶜאֲשֶׁר הֲסִרֹתִי מִלְּפָנֶיךָ: 16 וְנֶאֱמַן בֵּיתְךָ
17 וּמַמְלַכְתְּךָ עַד־עוֹלָם לְפָנֶיךָ ᵃ כִּסְאֲךָ ᵇיִהְיֶה נָכוֹן עַד־עוֹלָם: 17 כְּכֹל

LXX

1. Καὶ ἐγένετο ὅτε ἐκάθισεν ὁ βασιλεὺς ἐν τῷ οἴκῳ αὐτοῦ καὶ κύριος κατεκληρονόμησεν αὐτὸν κύκλῳ ἀπὸ πάντων τῶν ἐχρθῶν αὐτοῦ τῶν κύκλῳ, 2 καὶ εἶπεν ὁ βασιλεὺς πρὸς Ναθαν τὸν προφήτην Ἰδοὺ δὴ ἐγὼ κατοικῶ ἐν οἴκῳ κεδρίνῳ καὶ ἡ κιβωτὸς τοῦ θεοῦ κάθηται ἐν μέσῳ τῆς σκηνῆς. 3 καὶ εἶπεν Ναθαν πρὸς τὸν

βασιλέα Πάντα, ὅσα ἂν ἐν τῇ καρδίᾳ σου, βάδιζε καὶ ποίει, ὅτι κύριος μετὰ σοῦ. 4 καὶ ἐγένετο τῇ νυκτὶ ἐκείνῃ καὶ ἐγένετο ῥῆμα κυρίου πρὸς Ναθαν λέγων 5 Πορεύου καὶ εἰπὸν πρὸς τὸν δοῦλόν μου Δαυιδ Τάδε λέγει κύριος Οὐ σὺ οἰκοδομήσεις μοι οἶκον τοῦ κατοικῆσαί με· 6 ὅτι οὐ κατῴκηκα ἐν οἴκῳ ἀφ' ἧς ἡμέρας ἀνήγαγον ἐξ Αἰγύπτου τοὺς υἱοὺς Ισραηλ ἕως τῆς ἡμέρας ταύτης καὶ ἤμην ἐμπεριπατῶν ἐν καταλύματι καὶ ἐν σκηνῇ. 7 ἐν πᾶσιν, οἷς διῆλθον ἐν παντὶ Ισραηλ, εἰ λαλῶν ἐλάλησα πρὸς μίαν φυλὴν τοῦ Ισραηλ, ᾧ ἐνετειλάμην ποιμαίνειν τὸν λαόν μου Ισραηλ, λέγων Τί ὅτι οὐκ ᾠκοδομήκατέ μοι οἶκον κέδρινον; 8 καὶ νῦν τάδε ἐρεῖς τῷ δούλῳ μου Δαυιδ Τάδε λέγει κύριος παντοκράτωρ Ἔλαβόν σε ἐκ τῆς μάνδρας τῶν προβάτων τοῦ εἶναί σε εἰς ἡγούμενον ἐπὶ τὸν λαόν μου ἐπὶ τὸν Ισραηλ 9 καὶ ἤμην μετὰ σοῦ ἐν πᾶσιν, οἷς ἐπορεύου, καὶ ἐξωλέθρευσα πάντας τοὺς ἐχθρούς σου ἀπὸ προσώπου σου καὶ ἐποίησά σε ὀνομαστὸν κατὰ τὸ ὄνομα τῶν μεγάλων τῶν ἐπὶ τῆς γῆς. 10 καὶ θήσομαι τόπον τῷ λαῷ μου τῷ Ισραηλ καὶ καταφυτεύσω αὐτόν, καὶ κατασκηνώσει καθ' ἑαυτὸν καὶ οὐ μεριμνήσει οὐκέτι, καὶ οὐ προσθήσει υἱὸς ἀδικίας τοῦ ταπεινῶσαι αὐτὸν καθὼς ἀπ' ἀρχῆς 11 ἀπὸ τῶν ἡμερῶν, ὧν ἔταξα κριτὰς ἐπὶ τὸν λαόν μου Ισραηλ, καὶ ἀναπαύσω σε ἀπὸ πάντων τῶν ἐχθρῶν σου, καὶ ἀπαγγελεῖ σοι κύριος ὅτι οἶκον οἰκοδομήσεις αὐτῷ. 12 καὶ ἔσται ἐὰν πληρωθῶσιν αἱ ἡμέραι σου καὶ κοιμηθήσῃ μετὰ τῶν πατέρων σου, καὶ ἀναστήσω τὸ σπέρμα σου μετὰ σέ, ὃς ἔσται ἐκ τῆς κοιλίας σου, καὶ ἑτοιμάσω τὴν βασιλείαν αὐτοῦ· 13 αὐτὸς οἰκοδομήσει μοι οἶκον τῷ ὀνόματί μου, καὶ ἀνορθώσω τὸν θρόνον αὐτοῦ ἕως εἰς τὸν αἰῶνα. 14 ἐγὼ ἔσομαι αὐτῷ εἰς πατέρα, καὶ αὐτὸς ἔσται μοι εἰς υἱόν. καὶ ἐὰν ἔλθῃ ἡ ἀδικία αὐτοῦ, καὶ ἐλέγξω αὐτὸν ἐν ῥάβδῳ ἀνδρῶν καὶ ἐν ἁφαῖς υἱῶν ἀνθρώπων. 15 τὸ δὲ ἔλεός μου οὐκ ἀποστήσω ἀπ' αὐτοῦ, καθὼς ἀπέστησα ἀφ' ὧν ἀπέστησα ἐκ προσώπου μου. 16 καὶ πιστωθήσεται ὁ οἶκος αὐτοῦ καὶ ἡ βασιλεία αὐτοῦ ἕως αἰῶνος ἐνώπιον ἐμοῦ, καὶ ὁ θρόνος αὐτοῦ ἔσται ἀνωρθωμένος εἰς τὸν αἰῶνα. 17 κατὰ πάντας τοὺς λόγους τούτους καὶ κατὰ πᾶσαν τὴν ὅρασιν ταύτην, οὕτως ἐλάλησεν Ναθαν πρὸς Δαυιδ.

Introduction

The numerous scholarly studies dealing with 2 Samuel 7 testify to its importance.[11] Not only is it the theological highlight of the Books of Samuel but has been designated the ideological summit of the Deuteronomic history[12] as well as the source of subsequent messianic expectations (cf. Ps 89; Matt 1:1; Luke 1:32; Acts 13:22-23; Heb 1:4 cf. 2 Cor 6:16-18.)

This 'dynastic oracle' may have been aimed at those who questioned the dynastic succession and legitimacy of the house of David. But Nathan's oracle remained significant for future generations who looked for its fulfilment, if not in a contemporary leader such as Zerubbabel, then ultimately in a future Messiah.

The Hebrew Source Text (MT)

2 Samuel 7 comprises two sections: the actual dynastic oracle (v.1-17) and the Prayer of David which is presented as his response to the promise.

Our focus is on the dynastic promise (v.1-17) which, in its present literary form, is composed of four parts:

i) verses 1-3 the introductory setting
ii) verses 4-7 a negative oracle rejecting David's plan to build a temple for the Lord
iii) verses 8-11a a brief survey of David's rise to power
iv) verses 11b-17 the dynastic promise itself which has a poetic character.

Nathan's oracle has a parallel account in 1 Chr 17:1-15, as well as in the expanded poetic version of Ps 89:19-37 (assuming 2 Sam 7 is chronologically prior).

Verse 2 the word for 'tent' is not the usual אהל (see 6:17) but יריעה 'curtain' which in the parallel account of 1 Chr 17:1 becomes plural. In Exod 26:1 and 36:8 we learn that the tabernacle was made with ten 'curtains'. The two terms אהל and יריעה are used synonymously in Cant 1:5; Jer 4:20; 10:20; Hab 3:7.

Verse 3 Nathan's conclusion 'for the Lord is with you' in verse 3 is a motif in the David stories (cf. 1 Sam 18:12, 14, 28; 2 Sam 5:10).

---

11 see, eg., P.K. McCarter, Jr., *II Samuel: A New Translation with Introduction, Notes and Commentary* (Anchor Bible) (New York: Doubleday, 1984) esp.217-20; A.A. Anderson, *2 Samuel* (WBC) (Waco: Word Books, 1989) 112-16.

12 A.A. Anderson, *2 Samuel* (WBC) (Waco: Word Books, 1989) 112; P.K. McCarter, Jr., *II Samuel* (Anchor Bible) 220.

Verse 4 the oracle is introduced by the prophetic formula 'the word of the Lord came to...' which occurs some 200 times in the OT especially in the books of Jeremiah and Ezekiel.

Verse 5 'My servant David'—We are told that Oriental kings were often described as 'servants' of their gods.[13] But this select expression had already been applied to Moses (Josh 1:2,7).

'Thus says the Lord' is another familiar prophetic formula underlining the source and authority of the message.

Verse 7 There is some question as to whether שִׁבְטִים 'tribes' or שֹׁפְטִים 'judges' is the correct reading. 1 Chron 17:6 reads שֹׁפְטֵי 'the judges of' suggesting that there might a scribal error in the MT cf verse 11 where the latter word is used.

Verses 8-16 the oracle has the kind of rhythmical structure so frequently found in prophetic utterances.

The Septuagint Translation (LXX)

Since the discovery of the Dead Sea Scrolls it has become certain that the Hebrew text of Samuel-Kings used by the Septuagint translators frequently diverged from what was later to become the MT. Actually, long before Qumran there were some scholars, such as Wellhausen, who already saw the LXX as an important witness to a different and often more superior text.[14]

Nevertheless any divergence from the MT need not be attributed to an early DE practitioner! The translators of Samuel-Kings have the reputation of being among the most literal of the LXX translators.

Verse 1 The opening καὶ ἐγένετο echoes the Hebrew narrative marker (cf. v.4). The MT has 'The Lord had given him rest from all his enemies round about'—a common motif in the 'Deuteronomic history' (cf. Deut 12:10; 25:10; Josh 22:4; 23:1; 1 Kgs 5:18; 8:56). But the LXX has 'the Lord had given him **an inheritance** on **every** side from all his enemies', perhaps following a different Hebrew ST. The inheritance motif is also a key one in Scripture.

---

13 See R de Vaux, 'The King of Israel, Vassal of Yahweh', *The Bible and the Ancient Near East*, (London: Darton, Longman & Todd; 1972) 155.

14 See A. Aejmelaeus 'The Septuagint of Samuel' , *On the Trail of the Septuagint Translators*, (Kampen: Kok Pheros; 1993) 132

Verse 2 The LXX uses the ordinary word for tent σκηνή to translate the MT 'curtain'.

Verse 4 The LXX reproduces the common prophetic formula—'the word of the Lord came to' cf. v.5 'Thus says the Lord'.

Verse 6 The LXX retains the 'walking' metaphor using ἐμπεριπατέω to render הלך.

Verse 7 Though it retains the 'shepherding' verb it is interesting that the LXX supports the MTs 'tribes' over against 'judges' preferred by many interpreters on the basis of 1 Chron 17:6.

Verse 8 יהוה צבאות is rendered by κύριος παντοκράτωρ i.e., 'Lord Almighty'.

Verse 9 The Greek does not reproduce the MT's גדול—'great', but has 'I made you renowned'.

Verse 10 The LXX retains the 'planting' metaphor so common in the OT especially in Jeremiah (see 2:10; 11:17; 24:6; 31:28; 32:41; 42:10) and Psalms (e.g. Ps 1:3; 44:2; 80:8).

Verse 11 The use of κριτής to render שׁפט for a leader during the theocratic period of Israel's history would have extended the range of meaning of the Greek term.

The last part of the verse is completely different from the MT—'And the Lord will announce to you that you will build a house to him' as against the MT's 'And the Lord shall declare to you that the Lord will make you a house' which is awkward but theologically consistent with the thrust of the passage.

The LXX interpretation is also plausible however. It would involve regarding the last word in the verse יהוה (the divine name) as a textual corruption of והיה—'and it shall be' which would then commence verse 12.

It is notable too that the LXX uses οἶκος 'house'.

Verse 13 follows the Hebrew but drops 'of his kingdom'.

Verse 15 Again the LXX differs from the MT: firstly instead of 'But my steadfast love shall not depart', LXX has 'But my mercy **I will not take** from him'; secondly the MT says 'as I took it from them whom I removed from my presence'.

Verse 16 Again the LXX reports the Lord's pledge in the third person whereas the MT is vocative throughout.

Verse 17 The editorial conclusion to the oracle is identical with the MT.

Concluding Comment

The LXX rendering of 2 Sam 7:1-17 has a few startling divergences from the MT in what otherwise seems to be a quite literal translation. It is likely that these difference then reflect a slightly different Hebrew base text from the MT.

The word play on 'house' which is the motif of this section is even stronger in the LXX with compound verbs which include the root οἰκοδομέω and κατοικέω.

THE ENGLISH VERSIONS

RSV 1952

7 Now when the king dwelt in his house, and the LORD had given him rest from all his enemies round about, 2the king said to Nathan the prophet, "See now, I dwell in a house of cedar, but the ark of God dwells in a tent." 3And Nathan said to the king, "Go, do all that is in your heart; for the LORD is with you."

4But that same night the word of the LORD came to Nathan, 5"Go and tell my servant David, 'Thus says the LORD: Would you build me a house to dwell in? 6I have not dwelt in a house since the day I brought up the people of Israel from Egypt to this day, but I have been moving about in a tent for my dwelling. 7In all places where I have moved with all the people of Israel, did I speak a word with any of the judges of Israel, whom I commanded to shepherd my people in Israel, saying, "Why have you not built me a house of cedar?"' 8Now therefore thus you shall say to

GNB 1976

Nathan's Message to David

7 King David was settled in his place, and the LORD kept him safe from all his enemies. 2Then the king said to the prophet Nathan, "Here I am living in a house built of cedar, but God's Covenant Box is kept in a tent!" 3Nathan answered, "Do whatever you have in mind because the LORD is with you."

4But that night the LORD said to Nathan, 5"Go and tell my servant David that I say to him, 'You are not the one to build a temple for me to live in. 6From the time I rescued the people of Israel from Egypt until now, I have never lived in a temple; I have travelled round living in a tent. 7In all my travelling with the people of Israel I never asked any of the leaders that I appointed why they had not build me a temple made of cedar.' 8"So tell my servant David that I, the LORD almighty, say to

my servant David, 'Thus says the LORD of hosts, I took you from the pasture, from following the sheep, that you should be prince over my people Israel; 9and I have been with you wherever you went, and have cut off all your enemies from before you; and I will make for you a great name, like the name of the great ones of the earth. 10And I will appoint a place for my people Israel, and will plant them, that they may dwell in their own place, and be disturbed no more; and violent men shall afflict them no more, as formerly, 11from the time that I appointed judges over my people Israel; and I will give you rest from all your enemies. Moreover the LORD declares to you that the LORD will make you a house. 12When your days are fulfilled and you lie down with your fathers, I will raise up your offspring after you, who shall come forth from your body, and I will establish his kingdom. 13He shall build a house for my name, and I will establish the throne of his kingdom for ever. 14I will be his father, and he shall be my son. When he commits iniquity, I will chasten him with the rod of men, with the stripes of the sons of men; 15but I will not take my steadfast love from him, as I took it from Saul, whom I put away from before you. 16And you house and your kingdom shall be made sure for ever before me; your throne shall be established for ever.'" 17In accordance with all these words, and in accordance with all this vision, Nathan spoke to David.

him, 'I took you from looking after sheep in the fields and made you the ruler of my people Israel. 9I have been with you wherever you have gone, and I have defeated all your enemies as you advanced. I will make you as famous as the greatest leaders in the world. 10-11I have chosen a place for my people Israel and have settled them there, where they will live without being oppressed any more. Ever since they entered this land, they have been attacked by violent people, but this will not happen again. I promise to keep you safe from all your enemies and to give you descendants. 12When you die and are buried with your ancestors, I will make one of your sons king and will keep his kingdom strong. 13He will be the one to build a temple for me, and I will make sure that his dynasty continues for ever. 14I will be his father, and he will be my son. When he does wrong, I will punish him as a father punishes his son. 15But I will not withdraw my support from him as I did from Saul, whom I removed so that you could be kings. 16You will always have descendants, and I will make your kingdom, last for ever. Your dynasty will never end.'" 17Nathan told David everything that God had revealed to him.

The Revised Standard Version (1952)(RSV)

The RSV provides an FC rendering of this dynastic oracle. It prefers the LXX variants on two occasions only: in verse 9 'judges' is preferred to 'tribes' (i.e. 'did I speak a word with any of the judges of Israel...'), in verse 15 where the MT has 'My steadfast love shall not depart...' the RSV follows the LXX: 'but I will not take my steadfast love from him' (cf Syriac and Vulgate).

The RSV preserves the metaphors of the ST with one exception: in verse 6 it has God 'moving about in a tent' (cf. v.7) which is arguably no less alien than the original

'walking'. Furthermore the latter is a standard metaphor for 'journeying' throughout Scripture.

The Good News Bible (1976)(GNB)

The GNB supplies a title: *'Nathan's Message to David'* for its translation of 2 Sam 7:1-17 which is free, idiomatic and bald.

Verse 1 sets the tone: 'King David was settled in his palace and the Lord kept him safe from his enemies.'

The narrative has no marker unlike the ST and its other translations. This gives the passage an abrupt beginning. The king's name is supplied. The word play on 'house' is dispensed with. Here it **means** 'palace'.

The Lord's 'giving of rest' is replaced with 'kept him safe'. The latter is no doubt an aspect of what is conveyed by the Hebrew verb but loses the link with similar statements in e.g. Deut 12:10; 25:19; Josh 22:4; 23:1; 1 Kgs 5:18; 8:56.[15]

Verse 2 is idiomatic but the only defect is the loss of word play on the Hebrew verb יָשַׁב which GNB renders 'am living' in its first occurrence and 'is kept' in its second. 'God's covenant box' takes some getting used to. Note there is no 'God' in the ST.

Verse 3 'whatever you have in mind' replaces 'all that is in your heart'. This is certainly more natural in English but raises the question of cultural adaptation which blurs Biblical anthropology.

Verse 4 GNB's 'the Lord said to Nathan' replaces 'the word of the Lord came to Nathan'. This not only removes a well-known Biblical idiom but also detracts from the solemnity of the ST formula.

Verse 5 Likewise the second solemn prophetic formula 'Thus says the Lord' is replaced by 'I say'. Then the rhetorical question 'Would you build me a house...?' is replaced by a blunt statement. 'House' is rendered this time by 'temple' in accordance with DE emphasis that contextual consistency has priority over verbal concordance in the ST.

Verse 6 reverses the order of the principal and temporal clauses and renders 'house' by 'temple' again.

---

15 see G. von Rad, 'Rest for the People of God', *The Problem of the Hexateuch and Other Essays*, (London: SCM, 1984) 94-102.

Verse 7 GNB opts for the LXX 'judges' rather than MT 'tribes' but calls them 'leaders'. In verse 6 and 7 the Hebrew verb הלך is rendered 'travel'. 'House of cedar' becomes 'temple made of cedar'.

Verse 8 The prophetic formula 'Thus says the LORD of hosts' is rendered 'I the LORD Almighty say'.

Verse 9 The more idiomatic 'I have defeated all your enemies as you advanced' replaces 'I have cut off all your enemies before you'.

Likewise 'I will make you as famous as the greatest leaders in the world' is more natural in English but the loss of the specific reference to 'a great name' obliterates the link with other passages, e.g. Gen 12:3.

Verse 10-11 The GNB combines and condenses these two verses. Thus the RSV's 71 words are reduced to 57.

In the process certain key expressions are sacrificed v.10—the reference to 'planting' Israel, a frequent metaphor of the OT
—'from the time that I appointed judges over my people Israel' is replaced by 'ever since they entered this land'
—'I will give you rest from your enemies' becomes 'I promise to keep you safe from all your enemies' cf. comment on verse 1.
—'And the Lord declares to you that the Lord will make you a house' is replaced by 'I promise to give you descendants', losing not only the motif of 'house' but also the solemnity of the divine covenant underscored by the repetition of the divine name.

Verse 12 For the euphemistic original—'When your days are fulfilled and you lie down with your fathers', GNB substitutes the explicit 'When you die and are buried with your ancestors'.

Likewise the solemn original—'I will raise up your seed after you, who shall come forth from your body and I will establish his kingdom'—GNB replaces by the briefer, more business like—'I will make one of your sons king and will keep his kingdom strong'.

Verse 13 The ST 'He will build a house for my name' the GNB explains as 'He will be the one to build a temple for me', once again dissipating the motif of 'house' and also eliminating the 'name theology'. 'House for my name' occurs elsewhere, e.g., 1

Kgs 3:2; 5:3,4,17,19; 8:18, and serves to preempt any crude concept of God's presence. For God's dwelling, we are often reminded, is in heaven (Deut 4:36; 26:15; Isa 63:15; Ps 33:13-14). 'House for my name' may also imply ownership.

GNB also prefers 'I will make sure that his dynasty continues for ever' to the more literal 'I will establish the throne of his kingdom for ever'.

Verse 14 GNB translates the first clause literally but completely rewrites the second half of the verse. Thus the ST 'When he commits iniquity, I will chasten him with the rod of men, with the stripes of the sons of men' is dropped in favour of the GNB's briefer substitute—'I will punish him as a father punishes his son' which has no textual basis in either MT or LXX.

Verse 15 GNB like RSV before it prefers the LXX reading 'I will not withdraw my support from him' but the choice of 'support' to render the great covenant word חסד is very weak. The RSV's 'steadfast love' is far better.[16]

Verse 15 GNB again eliminates the concepts of 'the house of David' and 'the throne of David' in its paraphrase.

Verse 17 GNB's condensed paraphrase of the editorial closure is stylistically lame and flat compared with the original.

---

16 See K.D. Sakenfeld, *The Meaning of Hesed in the Hebrew Bible: A New Inquiry*, HSM 17 (Missoula, MT: Scholars Press, 1978).

TL 1958

7 Hata, pada sekali peristiwa, jaitu pada masa baginda bersemajam dalam istana baginda, dan telah dikaruniakan Tuhan akan baginda kesenangan daripada segala musuh baginda berkeliling, 2Maka titah baginda kepada nabi Natan: Bahwasanja aku ini duduk dalam sebuah istana daripada kaju araz, maka tabut Allah itu duduk ditengah-tengah kain kelambu! 3Maka sembah Natan kepada baginda: Baiklah tuanku sampaikan segala niat hati tuanku, karena Tuhan djuga menjertai tuanku. 4Tetapi pada malam itu djuga datanglah firman Tuhan kepada Natan, bunjinja: 5Pergilah engkau, katakanlah kepada hambaku Daud: Demikianlah firman Tuhan: Hendaklah engkau memperbuat sebuah rumah akan Daku, supaja Aku duduk didalamnja? 6Maka tiada djuga pernah Aku mengeduduki sebuah rumah daripada hari Aku membawa akan bani Israil keluar dari negeri Mesir datang kepada hari ini, melainkan turutlah djuga Aku mengembara dengan mengeduduki kemah dan pondok. 7Selamanja Aku mengembara serta dengan segala bani Israil, adakah pernah Aku befirman sepatah kata kepada salah suatu suku bangsa Israil, jang telah kusuruh menggembalakan umatku Israil, bunjinja: Mengapa maka tiada kamu memperbuat akan Daku sebuah rumah daripada kaju araz? 8Maka sekarang hendaklah kaukatakan kepada hambaku Daud: Inilah firman Tuhan serwa sekalian alam: Bahwa Aku sudah mengangkat akan dikau dari dalam barung, dari belakang kambing domba, akan mendjadi pengandjur segala umatku, jaitu orang Israil. 9Maka Aku sudah menjertai akan dikau barang kemana engkau pergi dan sudah katumpas segala musuhmu dihadapanmu, dan sudah kubesarkan namamu, seperti nama orang jang terbesar diatas bumi. 10Dan lagi telah kukaruniakan kepada umatku Israil

TB 1974
Janji TUHAN mengenai keluarga dan kerajaan Daud 7:1-17

7 Ketika radja telah menetap dirumahnya dan TUHAN telah mengaruniakan keamanan, kepadanya terhadap semua 2musuhnya disekeliling, berkatalah raja kepada nabi Natan: "Lihatlah, aku ini diam dalam rumah dari kayu aras, padahal tabut Allah diam dibawah tenda." 3Lalu berkatalah Natan kepada raJa: "Baik, lakukanlah segala sesuatu yang dikandung hatimu, sebab TUHAN menyertai engkau." 4Tetapi pada malam itu juga datanglah firman TUHAN kepada Natan, demikian: 5"Pergilah, katakanlah kepada hambaKu Daud: Beginilah firman TUHAN: Masakan engkau yang mendirikan rumah bagiKu untuk Kudiami? 6Aku tidak pernah diam dalam rumah sejak Aku menuntun orang Israel dari Mesir sampai hari ini, tetapi Aku selalu mengembara dalam kemah sebagi kediaman. 7Selama Aku mengembara bersama2 seluruh orang Israel, pernahkah Aku mengucapkan firman kepada salah seorang hakim orang Israel, yang Kuperintahkan menggembalakan umatKu Israel.demikian: Mengapa kamu tidak mendirikan bagiKu rumah dari kayu aras? 8Oleh sebab itu, beginilah kaukatakan kepada hambaKu Daud: Beginilah firman TUHAN semesta alam: Akulah yang mengambil engkau dari padang, ketika menggiring kambing-domba, untuk menjadi raja atas umatKu Israel. 9Aku telah menyertai engkau disegala tempat yang kaujalani dan telah melenyapkan segala musuhmu dari depanmu. Aku membuat besar namamu seperti nama orang2 besar yang ada dibumi. 10Aku menentukan tempat bagi umatKu Israel dan menanamkannya, sehingga ia dapat diam ditempatnya

suatu tempat sendiri, kutetapkan dia, supaja duduklah ia pada tempat jang tentu dan djangan lagi ia dipusingkan kesana-kemari dan djangan pula diusik oleh bangsa chianat akan dia, seperti pada zaman dahulu, 11Dan daripada hari Aku menjuruh hakim-hakim memerintahkan umatku Israil, melainkan akan dikau djuga Aku memberi kesenangan daripada segala musuhmu. Dan lagi Tuhanpun memberi tahu akan dikau, bahwa Tujan djuga akan mengekalkan rumahmu kelak. 12Maka apabila sudah genaplah segala harimu dan engkau sudah mangkat beradu dengan segala nenek-mojangmu, kemudian daripadamu kelak Aku membangkitkan benihmu, jang akan terbit daripada selbimu dan Aku memetapkan keradjaannja. 13Maka iapun akan membangunkan sebuah rumah akan tempat Namaku dan Akupun akan menetapkan tachta keradjaannja sampai selama-lamanja. 14Maka Aku mendjadi baginja akan bapa dan iapun mendjadi bagiku akan anak, maka apabila ia bersalah, Aku menjiksakan dia kelak dengan tjemeti manusia dan dengan bela anak-anak Adam. 15Tetapi keridlaanku tiada akan undur daripadanja, seperti jang kuundurkan dia daripada Saul, jang telah kulalukan dari hadapanmu. 16Tetapi rumahmu akan kekal adanja dan keradjaanmu sampai selama-lamanja. 17Maka setudju dengan segala firman ini dan setudju dengan segala penglihatan ini, demikianpun bersembahlah Natan kepada Daud.

sendiri dengan tidak lagi dikejutkan dan tidak pula ditindas oleh orang2 lalim seperti dahulu, sejak Aku mengangkat hakim2 atas umatKu Israel. 11Aku mengaruniakan keamanan kepadamu dari pada semua mushumu. Juga diberitahukan TUHAN kepadamu: TUHAN akan memberikan keturunan kepadamu. 12Apabila umurmu sudah genap dan engkau telah mendapat perhentian ber-sama2 dengan nenek moyangmu, maka Aku akan membangkitkan keturunanmu yang kemudian, anak kandungmu, dan Aku akan mengokohkan kerajaannya. 13Dialah yang akan mendirikan rumah bagi namaKu dan Aku akan mengokohkan tachta kerajaannya untuk se-lama2nya. 14Aku akan menjadi Bapanya, dan ia akan menjadi anakKu. Apabila ia melakukan kesalahan, maka Aku akan menghukum dia dengan rotan yang dipakai orang dan dengan pukulan yang diberikan anak2 manusia. 15Tetapi kasih-setiaKu tidak akan hilang dari padanya, seperti yang Kuhilangkan dari pada Saul, yang telah Kujauhkan dari hadapanmu. 16Keluarga dan kerajaanmu akan kokoh untuk se-lama2nya dihadapanKu, tachtamu akan kokoh untuk selama2-nya." 17Tepat seperti perkataan ini dan tepat seperti penglihatan ini Natan berbityara kepada Daud.

BIS
Pesan Natan kepada Daud

7 Tuhan melindungi Raja Daud dari segala gangguan musuhnya, sehingga ia dapat menetap di dalam istananya. 2Maka berkatalah raja kepada Nabi Natan, "Lihat, aku ini tinggal di istana yang dibuat dari kayu cemara Libanon, padahal Peti Perjanjian Allah hanya disimpan di dalam kemah saja!" 3Jawab Natan. "Lakukanlah segala niat Baginda, sebab Tuhan menolong Baginda." 4Tetapi pada malam itu Tuhan berkata kepada Natan, 5"Pergilah dan sampaikanlah kepada hambaku Daud pesanku ini, 'Masakan engkau yang mendirikan rumah bagiku. 6Sejak bangsa Israel kubebaskan dari Mesir sampai sekarang, belum pernah aku tinggal dalam sebuah rumah, melainkan selalu mengembara dan tinggal di sebuah kemah. 7Selama pengembaraanku bersama bangsa Israel, belum pernah aku bertanya kepada pemimpin-pemimpim yang telah kupilih, apa sebabnya

mereka tidak mendirikan rumah dari kayu cemara Libanon untuk aku.' 8Sebab itu, Natan, beritahukanlah kepada hambaku Daud, bahwa aku, Tuhan Yang Mahakuasa, berkata kepadanya, 'Engkau telah kuambil dari pekerjaanmu menggembalakan domba di padang dan kuangkat menjadi raja atas umatku Israel. 9Aku telah menyertai engkau ke mana saja engkau pergi, dan segala musuhmu telah katumpas pada waktu engkau bertempur. Engkau akan kubuat termasyhur seperti pemimpin-pemimpin yang paling besar di dunia. 10-11Lagipula, bagi umatku Israel telha kusediakan tempat dan kusuruh mereka menetap di situ, supaya mereka dapat hidup tenang, tanpa diganggu lagi. Sejak kedatangan mereka ke tanah ini dahulu, dan kuangkat pemimpin-pemimpin utuk mereka, mereka telah diserang oleh orang-orang yang suka kekerasan, tetapi hal itu tidak akan terjadi lagi. Aku berjanji bahwa engkau akan aman dari segala musuh, dan aku akan memberikan keturunan kepadamu. 12-13Kelak, jika sampai ajalmu, dan engkau dikuburkan di makam leluhurmu, seorang dari putramu akan kuangkat menjadi raja. Dialah yang akan mendirikan rumah bagiku. Kerajaannya akan kukukuhkan dan untuk selam-lamanya seorang keturunannya akan memerintah sebagi raja. 14Aku akan menjadi bapaknya dan dia akan menjadi putraku. Apabila dia berbuat salah, dia akan kubukum seperti seorang bapak menghukum anaknya. 15Tetapi aku akan tetap berbuat baik kepadanya sesuai dengan janjiku. Janjiku kepandanya akan tetap keupgang, tidak seperti yang kulakukan kepada Saul yang telah kugesar dari kedudukannya supaya engkau disa menjadi raja. 16Engkau akan selalu mempunyai keturunan, dan aku akan membuat kerajaanmu bertahan selama-lamanya. Untak selama-lamanya seorang dari keturunanmu akan memerintah sebagi raja.'" 17Lalu Natan memberitahukan kepada Daud segala yang telah dinyatakan Allah kepadanya.

Terjemahan Lama (1879/1958)(TL)

As we would expect the TL is quite a literal translation. Its word order is more Hebraistic than that of the RSV e.g. v.17 *demikian pun bersembahlah Natan kepada Daud*—'thus spoke (respectfully) Nathan to David'.

The TL follows the MT closely so that in verse 2 the ark of God dwells in the midst of curtains—*ditengah-tengahkain kelambu* an expression used for 'mosquito net' these days! Likewise the metaphor 'seed' in verse 12 explained as 'offspring' by the RSV is carried over into the Malay-Indonesian.

However with regard to the *leitmotif* 'house' it is noteworthy that in 2 of the 8 occurrences, the TL renders בית by *istana* 'palace' i.e. in verses 1 and 2 where the referent is the King's dwelling and the court scene is being set. In the remaining 6 occurrences the ordinary *rumah* is used even when the referent is the King's palace.

In fact the interesting feature of the TL's translation of 2 Sam 7:1-17 is the elegant courtly language that is used throughout. David is referred to as *baginda* 'his majesty'

and addressed as *tuanku* 'my lord'. Nathan does homage as he addressed the king as if he were before the Javanese Sultan in his *kraton* (the Javanese word for palace). Thus in verse 3 we read that Nathan *sembah* as he addresses the king, that is Nathan respectfully folds his 'hands finger tips touching his forehead'.

In other words we have an example of 'dynamic equivalence' operating in the old literalistic TL version at the point of the courtly context of this dynastic oracle.

Terjemahan Baru (1974)(TB)

The TB provides a title for this section *Janji Tuhan Mengenai keluarga dan kerajaan Daud* 'A Promise of the Lord Concerning the Family and Kingdom of David'.

The translation approach is generally FC. The language is brisk and modern. Gone is the language of the courtly etiquette. However, when 'the Lord speaks' or 'the word of the Lord' comes to the prophet, the traditional Arabic term *firman* is used to distinguish divine from human speech.

With regard to the *leitmotif* בית, the TB also uses *rumah* in 6 of the 8 occurrences. But where the TL departed from the principle of concordance twice in the first two verses in references to David's palace, the TB retains *rumah* . In verse 11 however, the TB replaces *rumah* with *keturunan* 'descendants' and in verse 15 with *keluarga* 'family' where the reference is to the foreshadowed dynasty.

Verse 2 the 'ark', *tabut Allah* (Arabic loan word used in TL) is under a 'tent'—*dibawah tenda* rather than between 'curtains'.

Verse 7 TB again follows the LXX in opting for 'judge' *hakim* where the TL had followed the MT in choosing 'tribe'.

Verse 12 TB replaces the metaphor 'seed' with *keturunan* 'descendants' a somewhat awkward choice as this has already been used to replace 'house' earlier.

Bahasa Indonesia Sahari-Hari (1985)(BIS)

The title *Pesan Natan Kepada Daud* is a translation of the equivalent section heading in the GNB.

The translation that follows likewise bears a closer relationship to the GNB than it does to the Hebrew ST.

In verses 2,4-7, 8-9, 10-11, 12-17 BIS follows the GNB extremely closely. Thus it reproduces GNB's idiosyncratic verse 14b *Apabila dia berbuat salah, dia akan kuhukum seperti seorang bapakmenghukum anaknya* —'When he does wrong **I will punish him as a father punishes his son**' which has no basis in the ST.

BIS does show some erratic independence of the GNB. Thus in verse 1 it reverses the order of the clauses.

Like the GNB it dissipates the motif בית but its renderings do not always line up with those of the GNB.

Verse 2 with its reference to 'God's covenant box' is an exact translation of GNB except that BIS adds that the cedar wood is 'of Lebanon' cf. v.7.

Verse 3 There is a serious return to the courtly language of the TL where David is addressed as 'Your Majesty' but this just does not fit with the colloquial common language used throughout. This aberration is all the more startling as BIS does not distinguish divine and human speech which is obligatory in Indonesian not only because of the feudal social context but because of the overwhelming influence of Islam on any religious language. This attribution of human speech words to God is one of the main criticisms of BIS by indigenes. The translators could defend themselves by appealing to the ST where there is no such distinction. But against that argument we note firstly the use of honorifics in 1 Sam 7:3 where there are none in the ST. Secondly the influence of the Islamic context cannot be ignored. Thirdly it cuts against the DE emphasis on naturalness in the RL.

Concluding Comment

In our comparison of the GNB and its counterpart BIS with FC translations and with the MT and the LXX we have noted that some variation in renderings stem from difference between the MT and the tradition represented by the LXX and the choices made by respective translators.

Both ST traditions, however, record a solemn prophetic oracle woven around the term בית 'house'. This motif is dissipated in the DE versions which render the ST term as 'house', 'palace', 'temple' or 'dynasty' according to the nuance uppermost in the immediate context.

The Indonesian DE version BIS follows the English GNB very closely in abandoning the formal register of the ST language and style (e.g. prophetic formulae), in restructuring sentences, in providing information that is deemed implicit (e.g. names),

and in obliterating word play and metaphor (e.g. 'house', 'dwell', 'rest', 'seed', 'planting', 'name') that is an intrinsic part of the ST.

There is ample evidence that the GNB is the base for BIS rather than the Hebrew ST.

TEXT 3 PSALM 1

MT

1 אַשְׁרֵי־הָאִישׁ אֲשֶׁר׀ לֹא הָלַךְ בַּעֲצַת רְשָׁעִים
וּבְדֶרֶךְ[b] חַטָּאִים לֹא עָמָד וּבְמוֹשַׁב לֵצִים לֹא יָשָׁב׃
2 כִּי אִם בְּתוֹרַת יְהוָה חֶפְצוֹ וּבְתוֹרָתוֹ יֶהְגֶּה יוֹמָם וָלָיְלָה׃
3 וְהָיָה כְּעֵץ שָׁתוּל עַל־פַּלְגֵי מָיִם
אֲשֶׁר[a] פִּרְיוֹ׀ יִתֵּן בְּעִתּוֹ וְעָלֵהוּ לֹא־יִבּוֹל
[b]וְכֹל אֲשֶׁר־יַעֲשֶׂה יַצְלִיחַ[b]׃
4 לֹא־כֵן הָרְשָׁעִים[a]
כִּי אִם־כַּמֹּץ אֲשֶׁר־תִּדְּפֶנּוּ רוּחַ[b]׃
5 עַל־כֵּן׀ לֹא־יָקֻמוּ רְשָׁעִים בַּמִּשְׁפָּט וְחַטָּאִים בַּעֲדַת[a] צַדִּיקִים׃
6 כִּי־יוֹדֵעַ יְהוָה דֶּרֶךְ צַדִּיקִים וְדֶרֶךְ רְשָׁעִים תֹּאבֵד׃

LXX

1 Μακάριος ἀνήρ, ὃς οὐκ ἐπορεύθη ἐν βουλῇ ἀσεβῶν
καὶ ἐν ὁδῷ ἁμαρτωλῶν οὐκ ἔστη
καὶ ἐπὶ καθέδραν λοιμῶν οὐκ ἐκάθισεν,
2 ἀλλ' ἢ ἐν τῷ νόμῳ κυρίου τὸ θέλημα αὐτοῦ,
καὶ ἐν τῷ νόμῳ αὐτοῦ μελετήσει ἡμέρας καὶ νυκτός.
3 καὶ ἔσται ὡς τὸ ξύλον τὸ πεφυτευμένον παρὰ τὰς διεξόδους
τῶν ὑδάτων,
ὃ τὸν καρπὸν αὐτοῦ δώσει ἐν καιρῷ αὐτοῦ
καὶ τὸ φύλλον αὐτοῦ οὐκ ἀπορρυήσεται·
καὶ πάντα, ὅσα ἂν ποιῇ, κατευοδωθήσεται.
4 οὐχ οὕτως οἱ ἀσεβεῖς, οὐχ οὕτως,
ἀλλ' ἢ ὡς ὁ χνοῦς, ὃν ἐκριπτεῖ ὁ ἄνεμος ἀπὸ προσώπου τῆς γῆς.
5 διὰ τοῦτο οὐκ ἀναστήσονται ἀσεβεῖς ἐν κρίσει
οὐδὲ ἁμαρτωλοὶ ἐν βουλῇ δικαίων·
6 ὅτι γινώσκει κύριος ὁδὸν δικαίων,
καὶ ὁδὸς ἀσεβῶν ἀπολεῖται.

The Hebrew Source Text (MT)

The Hebrew has no title. The psalm may in fact have been composed as a prologue to the whole Psalter. Its central teaching, the blessedness of the godly and the condemnation of the wicked, is a theme that is characteristic not only of the Psalter, but of almost all the writings of the Old Covenant reappearing as promise and warning or as blessing and curse.[17]

The psalms are poetry characterized by stress and sense parallelism rather than rhyme, as well as by figurative language. Psalm 1 does not employ many of the formal devices found in the Psalter such as refrains or acrostic patterns.

If anything the allusions to the company a man keeps recall the teaching of the wisdom writers (cf. Prov 2:12-15, 20-22), though the closest parallel to the teaching of Psalm 1 is found in Jer 17:5-8.

The Septuagint Translation (LXX)

The Septuagint preserves the formal features of the Hebrew to a remarkable degree. Being an inflected language Greek was able to retain even the word order of the ST. Another notable feature is the consistent omission of the definite article as in the Hebrew of this psalm.

The figures of speech are all preserved: the 'walk', 'sit', 'stand' of verse 1; the extensive tree simile of verse 3; the chaff counterpart of verse 5 and 'the way' metaphor of verse 6.

All these images by the way are not peculiar to this psalm. Rather they are very common in Scripture.

The LXX shows independence of the MT twice in verse 4 where it repeats 'not thus' (for poetic reasons?) and adds 'from the face of the earth'.

---

17 See A.A. Anderson, *Psalms 1–72* (NCB) (Grand Rapids: Wm.B. Eerdmans, 1981) 57-8; P.C. Craigie, *Psalms 1–50* (WBC) (Waco: Word Books, 1983) 58-60.

RSV 1952

1. Blessed is the man who walks not
in the counsel of the wicked, nor
stands in the way of sinners, nor sits
in the seat of scoffers; 2but his delight
is in the law of the LORD, and on his
law he meditates day and night. 3He
is like a tree planted by streams of
water, that yields its fruit in its
season, and its leaf does not wither.
In all that he does, he prospers. 4The
wicked are no so, but are like chaff
which the wind drives away.
5Therefore the wicked will not stand
in the judgment, nor sinners in the
congregation of the righteous; 6for the
LORD knows the way of the
righteous, but the way of wicked will
perish.

GNB 1976

1. Happy are those who reject the
advice of evil men, who do not
follow the example of sinners or join
those who have no use for God.
2Instead, they find joy in obeying
the Law of the LORD, and they
study it day and night. 3They are
like trees that grow beside a stream,
that bear fruit at the right time, and
whose leaves do not dry up. They
succeed in everything they do. 4But
evil men are not like this at all; they
are like straw that wind blows away.
5Sinners will be condemned by God
and kept apart from God's own
people. 6The righteous are guided
and protected by the LORD, but the
evil are on their way to doom.

The Revised Standard Version (1952)(RSV)

Psalm 1 is also a FC version but with regard to word order and articles before nouns (plus the need for a copula) the RSV adjusts to the dictates of English.

It preserves all the figures of the Hebrew ST but makes a slight syntactic change to the end of verse 3 such that 'he' prospers rather than 'his works'.

The Good News Bible (1976)(GNB)

The GNB focuses on communicating the information in the Psalm rather than its formal features. Its sensitivity to the original's 'sexist language' is reflected in the pluralizing of the subject. 'The man' becomes 'those who' and the first three verses are adjusted accordingly (e.g. pronouns, verb suffixes and 'the tree' to which the righteous man is compared).

Verse 1 The universal everyday metaphors of walking, standing, and sitting are dropped in favour of a more explanatory paraphrase which even introduces 'God'.

Verse 2 GNB is more explicit than the ST: 'They find joy in **obeying** the Law of the Lord', 'law' being capitalized in the process.

Verse 3 'The trees' are no longer 'planted' (by the Divine gardener) but 'grow beside a stream' which suggests that spiritual happiness is naturally attained. GNB consolidates RSV's modification and reverses the order of the final two clauses.

Verse 4 GNB surprisingly introduces 'evil **men**'; inverse sexism! For some reason 'straw' replaces the lightweight 'husks' or 'chaff' that are blown away in contrast to the firmly rooted, fruitful tree.

Verses 5-6 These are completely paraphrased and condensed. Reference to the 'congregation', whether the present worshipping assembly or that of the final assize (cf. Dan 7:9f), is omitted. 'God' is interpolated twice in verse 5. Five verbs in the last two verses are now in the passive, arguably diminishing the focus on 'the LORD' who is the subject in the ST.

THE INDONESIAN VERSIONS

TL 1958

1. Berbahagialah orang jang tiada berdjalan dalam bitjara orang fasik atau berdiri pada djalan orang berdosa, atau duduk dalam perhimpunan orang pengolok; 2Melainkan jang suka akan hukum Tuhan dan jang memikirkan hukum itu baik siang, baik malam; 3Karena adalah halnja bagaikan pokok, jang tertanam pada tepi anak sungai, jang berbuah pada musimnja dan jang tiada gugur daunnja; maka segala perbuatannjapun beruntung djuga. 4Adapun orang fasik itu bukannja demikian, melainkan adalah mereka itu seperti sekam jang dilajangkan oleh angin. 5Sebab itu seorang fasikpun tiada akan tahan menghadap hukum atau seorang berdosa menghadap perhimpunan orang jang benar. 6Karena diketahui Tuhan akan djalan orang jang benar itu, tetapi djalan orang fasik akan binasa adanja.

TB 1974

1. Berbahagialah orang yang tidak berjalan menurut nasihat orang fasik, yang tidak berdiri di jalan orang berdosa, dan yang tidak duduk dalam kumpulan pencemooh, 2tetapi yang kesukaannya ialah Taurat TUHAN, dan yang merenungkan Taurat itu siang dan malam. 3Ia seperti pohon, yang ditanam di tepi aliran air, yang menghasilkan buahnya pada musimnya, dan yang tidak layu daunnya; apa saja yang diperbuatnya berhasil. 4Bukan demikian orang fasik: mereka seperti sekam yang ditiupkan angin. 5Sebab itu orang fasik tidak akan tahan dalam penghakiman, begitu pula orang berdosa dalam perkumpulan orang benar; 6sebab TUHAN mengenal jalan orang benar, tetapi jalan orang fasik menuju kebinasaan.

BIS

1. Berhagialah orang yang tidak mengikuti nasihat orang jahat, tidak mencontoh orang berdosa dan tidak bergaul dengan orang yang menghina Allah, 2tetapi yang suka melakukan perintah Tuhan dan merenungkannya siang malam. 3Orang itu berhasil dalam segala usahanya; ia seperti pohon di tepi sungai yang berbuah pada musimnya dan tak pernah layu daunnya. 4Sebaliknya orang jahat: ia

seperti sekam yang dihamburkan angin. [5]Orang jahat akan dihukum Allah, hakimnya dan dipisahkan dari umatnya. [6]Sebab orang taat dibimbing dan dilindungi Tuhan, tetapi orang jahat menuju kepada kebinasaan.

Terjemahan Lama (1879/1958)(TL)

The Old Translation is similar to the English RSV with somewhat more archaic language. It preserves the structure and figures of the ST. Unlike the RSV it retains, in verse 3, 'all that he does, prospers'

There is one concession to Indonesian style in verse 6 where the ST active gives way to a passive rendering viz. 'Because it is known by the Lord'.

Terjemahan Baru (TB)

The New Translation provides a title of which the English equivalent is 'The Way of the Righteous and the Way of the Wicked'.

The translation uses a natural modern Indonesian while essentially preserving the structure and figures of the ST.

In verse 4 it actually reverts to the unnatural word order of the Hebrew (and LXX) *Bukan demikian orang fasik*—'not thus, the wicked person'.

It also used the more technical *Taurat*, capitalized, 'Torah' rather than the general *hukum* 'law' of the TL.

Two passives are employed in verse 3 where the ST has actives.

Bahasa Indonesia Sehari-Hari (1985)(BIS)

The DE translation provides a title: 'True Happiness' (cf. GNB)

The first three verses follow the GNB fairly closely without switching to the plurals that the GNB employs for the sake of inclusive language. In fact sexist language concerns are generally not applicable in Bahasa Indonesia because neither the pronouns nor the word for 'person' *orang* is gender marked.

Verse 1 Whereas the TL and the TB had preserved the everyday metaphors of the ST in verse 1 *berjalan* 'walk', *berdiri* 'stand' and *duduk* 'sit', BIS adopts the explanatory approach of the GNB:

who do not follow the advice of the wicked
do not follow the example of the sinful

and do not join with those who insult Allah

Note how BIS follows GNB in interpolating 'God' into verse 1, as the target of the scoffers, a dubious piece of over-translation.

Verse 2 Likewise in verse 2 'delight in the Law of the Lord' becomes 'delight in **obeying** the command of the Lord', following the GNB. The insertion of 'obeying' is unnecessarily explicit and limiting. BIS's use of *perintah* 'command' is strange. *Hukum* or *Taurat* would be more appropriate.

Verse 3 BIS is more radical than GNB. It restructures the verse, putting the concluding line of the ST before the simile thus reducing the impact of the comparison with the tree. In BIS the tree is neither 'planted' as in the ST or 'growing' as in the GNB; it is simply 'a tree by the side of the river'.

Verse 4 BIS has one improvement over GNB: the Indonesian word for 'husks' *sekam* is used rather than straw. The image in verse 4 of the wind blowing away the (rice) husks when the grain is tossed into the air is just as powerful in Indonesia as it is in Africa or Palestine.

Verses 5 and 6 in BIS are a straight translation of the GNB paraphrase!

Concluding Comment

The GNB translation is cavalier in its treatment of the formal features of Psalm 1 particularly in verses 5 and 6. There is a general tendency to over-translation in terms of explicitness and the three basic metaphors of verse 1 are casualties.

Sensitivity to 'sexist language' is reflected in the pluralizing of the subject of the first three verses though the introduction of 'evil **men**' in verse 4 suggests inverse sexism.

The Indonesian DE translation BIS is clearly based on the GNB as the title provided suggests. However as Bahasa Indonesia is not gender marked there is no need to pluralize the subject of the first three verses. BIS does introduce five passive constructions not found in the ST in the last three verses, which is more natural in Bahasa Indonesia. Even these had already been employed in the GNB.

TEXT 4 ZECHARIAH 2:6-13 (Hebrew and LXX 2:10-17)

Introduction

The Book of Zechariah is the longest of the twelve minor prophets. Of all the OT books it stands out as the one most quoted in the Gospel narrative of the passion, death and resurrection of Jesus. It is an important source of messianism.[18]

Haggai and Zechariah are regularly bracketed together as the titles of commentaries bear witness, as two prophets who prophesied between 520 and 517 BC. Personal details are minimal, though their persons are enhanced in the LXX, Syriac and Vulgate translations which attribute various psalms to them.

The name of both prophets resonate with their respective tasks. Zechariah, a common name in the OT where it occurs 33 times, means 'Yahweh has remembered' (from the Hebrew זכר followed by the suffix יה).

The critical consensus that discerns a fundamental division between chapters 1-8 and 9-14 does not concern us here. Certainly the medium of chapters 9-14 is more apocalyptic, whereas the earlier chapters convey their message through the medium of visions. The Book of Revelation draws much of its symbolic language from Zechariah along with Isaiah, Ezekiel and Daniel.

The particular text we have chosen is an oracle spelling out the practical implications of Zechariah's second and third visions in which the Lord guarantees the safety of Jerusalem.

Zechariah 2:6-13 is most definitely ***poetry*** though the change of genre, as well as speaker and destination, is not reflected in the standard English versions. Only Moffatt and JB set it out as poetry.

It is important to note the different enumeration of verses in Zech chapters 1-2:

Hebrew & LXX	Vulgate, English
1:1-17	1:1-17
2:1-4	1:18-21
2:5-17	2:1-13
3:1ff	3:1ff

---

18 See R.L. Smith, *Micah–Malachi* (WBC) (Waco: Word Books, 1984) 175-81.

MT

10 הֹוי הֹוי וְנֻסוּ מֵאֶרֶץ צָפֹון נְאֻם־יְהוָה
כִּי כְּאַרְבַּע רוּחוֹת הַשָּׁמַיִם פֵּרַשְׂתִּי אֶתְכֶם נְאֻם־יְהוָה׃
11 הֹוי צִיּוֹן הִמָּלְטִי יוֹשֶׁבֶת בַּת־בָּבֶל׃ ס
12 כִּי כֹה אָמַר יְהוָה צְבָאוֹת אַחַר כָּבוֹד שְׁלָחַנִי אֶל־הַגּוֹיִם
הַשֹּׁלְלִים אֶתְכֶם כִּי הַנֹּגֵעַ בָּכֶם נֹגֵעַ בְּבָבַת עֵינוֹ׃ 13 כִּי הִנְנִי מֵנִיף
אֶת־יָדִי עֲלֵיהֶם וְהָיוּ שָׁלָל לְעַבְדֵיהֶם וִידַעְתֶּם כִּי־יְהוָה צְבָאוֹת
שְׁלָחָנִי׃ ס 14 רָנִּי וְשִׂמְחִי בַּת־צִיּוֹן כִּי הִנְנִי־בָא וְשָׁכַנְתִּי בְתוֹכֵךְ
נְאֻם־יְהוָה׃ 15 וְנִלְווּ גוֹיִם רַבִּים אֶל־יְהוָה בַּיּוֹם הַהוּא וְהָיוּ לִי לְעָם
וְשָׁכַנְתִּי בְתוֹכֵךְ וְיָדַעַתְּ כִּי־יְהוָה צְבָאוֹת שְׁלָחַנִי אֵלָיִךְ׃ 16 וְנָחַל
יְהוָה אֶת־יְהוּדָה חֶלְקוֹ עַל אַדְמַת הַקֹּדֶשׁ וּבָחַר עוֹד בִּירוּשָׁלָם׃
17 הַס כָּל־בָּשָׂר מִפְּנֵי יְהוָה כִּי נֵעוֹר מִמְּעוֹן קָדְשׁוֹ׃ ס

LXX

10 ὦ ὦ φεύγετε ἀπὸ γῆς βορρᾶ, λέγει κύριος, διότι ἐκ τῶν τεσσαρών ἀνέμων τοῦ οὐρανοῦ συνάξω ὑμᾶς, λέγει κύριος· 11 εἰς Σιων ἀνασῴζεσθε, οἱ κατοικοῦντες θυγατέρα Βαβυλῶνος. 12 διότι τάδε λέγει κύριος παντοκράτωρ, Ὀπίσω δόξης ἀπέσταλκέν με ἐπὶ τὰ ἔθνη τὰ σκυλεύσαντα ὑμᾶς, διότι ὁ ἁπτόμενος ὑμῶν ὡς ἁπτόμενος τῆς κόρης τοῦ ὀφθαλμοῦ αὐτοῦ· 13 διότι ἰδοὺ εγὼ ἐπιφέρω τὴν χεῖρά μου ἐπ' αὐτούς, καὶ ἔσονται σκῦλα τοῖς δουλεύουσιν αὐτοῖς, καὶ γνώσεσθε διότι κύριος παντοκράτωρ ἀπέσταλκέν με. 14 τέρπου καὶ εὐφραίνου, θύγατερ Σιων, διότι ἰδοὺ ἐγὼ ἔρχομαι καὶ κατασκηνώσω ἐν μέσῳ σου, λέγει κύριος. 15 καὶ καταφεύξονται ἔθνη πολλὰ ἐπὶ τὸν κύριον ἐν τῇ ἡμέρᾳ ἐκείνῃ καὶ ἔσονται αὐτῷ εἰς λαὸν καὶ κατασκηνώσουσιν ἐν μέσῳ σου, καὶ ἐπιγνώσῃ ὅτι κύριος παντοκράτωρ ἐξαπέσταλκέν με πρὸς σέ. 16 καὶ κατακληρονομήσει κύριος τὸν Ιουδαν τὴν μερίδα αὐτοῦ ἐπὶ τὴν γῆν τὴν ἁγίαν καὶ αἱρετιεῖ ἔτι τὴν Ιερουσαλημ. 17 εὐλαβείσθω πᾶσα σὰρξ ἀπὸ προσώπου κυρίου, διότι ἐξεγήγερται ἐκ νεφελῶν ἁγίων αὐτοῦ.

The Hebrew Source Text (MT)

The MT of Zechariah chapters 1-8 is regarded as being well preserved. However the footnotes in the RV and RSV remind us that this does not mean these chapters are

always easy to translate. Thus Petersen in his commentary is moved to offer 13 readings that differ from the MT.[19]

Our particular sample, the oracle of chapter 2:10-17, is as we have noted intensely poetic, being full of imagery and allusion.

The Septuagint Versions (LXX)

The Greek retains the form of the Oracle but provides a few differences of interpretation. As always the Hebrew personal name YHWH is rendered by the title κύριος.

Verse 6 (LXX v.10) does not follow the MT in regarding the 'second clause as parenthetical explaining how the Jews got to Babylon i.e. 'for to the four winds I have dispersed you' (Heb. פרשתי), but rather as a promise of future ingathering from the four winds of heaven.

Verse 12 κύριος παντοκράτωρ is used to render יהוה צבאות as usual in LXX.

Verse 8 (LXX v.12) 'After (the) glory (he) sent me' is the LXX's literal rendering of a notoriously difficult Hebrew clause. The various resolutions proposed revolve around different interpretations of 'after' אחר which could be taken as a conjunction or preposition, and of 'glory' כבוד. The latter could be a substitute for the Divine subject or it could be a reference to the vision (cf Ezek 1:28). Another suggestion is that אחר is being used in the sense of 'with' and כבוד in its literal sense of 'heaviness' so that the expression here has the sense of 'with insistence he sent me'.

LXX does retain 'the apple of the eye' image cf. Deut 32:10; Ps 17:8 but changes MT's 'my eye' to 'his eye'.

Verse 9 (LXX v.13) 'I will shake my hand over them' becomes 'I bring my hand upon them'. This could be motivated by the LXX's reluctance to use anthropomorphisms as in the case of the last verb in verse 13 (17) where 'he has risen up from his holy clouds' replaces 'he has roused himself from his holy dwelling' (cf. Zech 4:1; Ps 44:23; Isa 51:9).

---

19 D.L. Petersen, *Haggai & Zechariah 1-8*, (London: SCM, 1984) 125

Verse 11 (LXX v.15) 'Many nations shall join themselves to the Lord in that day' becomes 'Many nations shall **flee for refuge** to the Lord in that day'. Likewise 'They shall become a people for him' instead of MT's 'They shall be my people', the great covenant theme (cf. Jer 31:33; 32:38).

Verse 13 (LXX v.17) MT's 'Be silent all flesh before the Lord' becomes 'Let all flesh fear before the Lord'.

THE ENGLISH VERSIONS

RSV 1952

6Ho! Ho! Flee from the land of the north, says the LORD; for I have spread you abroad as the four winds of the heavens, says the LORD. 7Ho! Escape, you who dwell with the daughters of Babylon. 8For thus said the LORD of hosts, after his glory sent me to the nations who plundered you, for he who touches you touches the apple of his eye: 9"Behold, I will shake my hand over them, and they shall become plunder for those who served them. Then you will know that the LORD of hosts has sent me. 10Sing and rejoice, O daughter of Zion; for lo, I come and I will dwell in the midst of you says the LORD. 11And many nations shall join themselves to the LORD in that day, and shall be my people; and I will dwell in the midst of you, and you shall know that the LORD of hosts has sent me to you. 12And the LORD will inherit Judah as his portion in the holy land, and will again choose Jerusalem." 13Be silent, all flesh, before the LORD; for he has roused himself from his holy dwelling.

GNB 1976
The Exiles Are Called to Come Home

6-7The LORD said to his people, "I scattered you in all directions. But now, you exiles, escape from Babylonia and return to Jerusalem. 8Anyone who strikes you strikes what is most precious to me." So the LORD Almighty sent me with this message for the nations that had plundered his people: 9"The LORD himself will fight against you, and you will be plundered by the people who were once your servants." When this happens, everyone will know that the LORD Almighty sent me. 10The LORD said, "Sing for joy, people of Jerusalem! I am coming to live among you!" 11At that time many nations will come to the LORD and become his people. He will live among you, and you will know that he has sent me to you. 12Once again Judah will be the special possession of the LORD in his sacred land, and Jerusalem will be the city he loves most of all. 13Be silent, everyone, in the presence of the LORD, for he is coming from his holy dwelling-place.

The Revised Standard Version (1952)(RSV)

The RSV follows the MT very closely as the initial 'Ho! Ho!" would have led one to anticipate. A dynamic equivalent such as 'Listen! Listen!' would have been acceptable(see Isa 18:1; 55:1; Jer 47:6), though in other contexts it can mean 'Woe!'

However on one occasion the RSV does follow the LXX in its 'Escape to Zion', where the MT simply reads 'Ho! Zion' (v.7).

The RSV retains all the imagery as well as most of the formal features of the original.

The Good News Bible (1976)(GNB)

GNB by contrast is extremely free in its rendering of this prophecy.

Verses 6 and 7 are conflated in a flat paraphrase which begins 'The Lord said to his people...' instead of the urgent and arresting 'Ho! Ho!'

GNB eliminates the twelve figures preserved in the RSV and makes explicit that the 'land of the North' is Babylon. The latter is in fact a figure taken from Jeremiah where it refers to the area from which the invaders will come (Jer 6:22; 10:22) and from which the exiles would return (3:18; 16:15; 23:8; 31:8). Ironically GNB retains 'country in the North' in Jeremiah but by paraphrasing the figure here, it eliminates the allusion and the important link with the previous prophecy. This expression from Jeremiah is used in parallelism in the ST with 'the four winds' and 'the daughter of Babylon' which GNB also drops. In summary this parallelism and the linguistic usage in Jeremiah helps us to understand that 'the North' is a conventional figure for the diaspora. The 'North' serves both as a literal reference insofar as one had to travel via Syria to Mesopotamia and as a symbol of all scattered to the four winds.

Verse 8 The solemn prophetic formula 'Thus says the Lord of hosts' is dropped. So is the ambiguous reference to his 'glory'. 'The apple of his eye' is paraphrased by 'what is most precious to me' thus obliterating the great covenant allusion to Deut 32.

Verse 9 The emphatic prophecy marker 'Behold' is dropped, as is the Lord's 'shaking his hand'. The dropping of the anthropomorphic 'shake my hand' and 'He has roused himself' (v.13) signal an important tendency of the GNB to sterilize language about God.

Some of the figures dropped are arguably difficult: 'four winds of heaven', 'daughter of Babylon', 'daughter of Zion', 'Zion', 'inheritance' and 'flesh'. But they are part of the texture of the text. 'Inheritance' vocabulary (v.12) reflects a theme of both testaments that is regularly dissipated in the GNB. As to 'flesh' (v.13) the GNB's aversion to the metonyms 'flesh' and 'blood' is notorious, not least where they are a motif in the ST as is σάρξ in Paul and דם in Ezek 22:1-13; 24:6-9.

TL 1958

6Dengarlah, dengarlah, larilah dari tanah utara, demikianiah firman Tuhan; hai kamu, jang sudah kutjerai-beraikan kepada keempat mata angin, demikianlah firman Tuhan! 7Dengarlah, hai Zion! Luputkanlah dirimu dari sana, hai engkau jang lagi duduk ditanah Babil! 8Karena demikianlah firman Tuhan serwa sekalian alam (setelah sudah disurukannja aku dengan kemuliaan kepada segala bangsa jang dahulu mendjarahi akan dikau): Bahwasanja barangsiapajang mengusik kamu, ia itu mengusik bidji mataku! 9Karena sesungguhnja, djikalau sahadja Aku menggerakkan tanganku atasnja, maka mereka itu djadi suatu djarahan bagi segala orang, jang dahulu hambanja. Demikianlah diketahui olehmu kelak, bahwa aku telah disuruhkan oleh Tuhan serwa sekalian alam! 10Bersorak-soraklah dan bersukasukaanlah, hai puteri Zion! Karena sesunggunhnja Aku datang dan Aku akan duduk ditengah-tengah kamu, demikianlah firman Tuhan. 11Maka pada hari itu beberapa bangsa jang besar-besar akan bersangkut-paut kepada Tuhan, dan djadi umat bagiku! Demikianlah Aku akan duduk ditengah-tengah kamu dan akan diketahui olehmu, bahwa telah disuruhkan Tuhan serwa sekalian alam akan daku mendapatkan kamu! 12Pada masa itu Tuhan mempunjai Jehuda akan pusakanja, akan bahagiannja ditanah sutji, dan Jeruzalempun akan djadi pula negeri pilihannja! 13Diamlah kamu, hai segala manusia, dihadapan hadlirat Tuhan! Karena sudah bangunlah Ia dari dalam kediaman kesutjiannja!

TB 1974
Orang-orang buangan dipanggil pulang

6Ayo, ayo, larilah dari Tanah Utara, demikianlah firman TUHAN; sebab kearah keempat mata angin Aku telah menyerakkan kamu, demikianlah firman TUHAN. 7Ayo, luputkanlah dirimu ke Sion, hai, penduduk Babel! Sebab beginilah firman TUHAN semesta alam, yang dalam kemuliaanNya telah mengutus aku, mengenai bengsa-bangsa yang telah menjarah kamu—sebab siapa yang menjamah kamu, berarti menjamah biji mataNya—: 9"Sesungguhnya Aku akan menggerakkan tanganKu terhadap mereka, dan mereka akan menjadi jarahan bagi orang-orang yang tadinya takluk kepada mereka. Marka kamu akan mengetahui bahwa TUHAN semesta alam yang mengutus aku. 10Besorak-sorailah dan bersukarialah, hai puteri Sion, sebab sesungguhnya Aku datang dan diam di tengah-tengah-mu, demikianlah firman TUHAN; dan banyak bangsa akan menggabungkan diri kepada TUHAN pada waktu itu dan akan menjadi umatKu dan Aku akan diam di tengah-tengahmu." Maka engkau akan mengetahui, bahwa TUHAN semesta alam yang mengutus aku kepadamu. 12Dan TUHAN akan mengambil Yehuda sebagai milikNya di tanah yang kudus, dan Ia akan memilih Yerusalem pula. 13Berdiam dirilah, hai segala makhluk, di hadapan TUHAN, sebab Ia telah bangkit dari tempat kediamanNya yang kudus.

BIS
Orang-orang buangan dipanggil pulang

6-7Tuhan berkata kepada umatnya, "Aku telah menceraiberaikan kamu ke segala penjuru. Tetapi sekarang hai orang-orang buangan, larilah dari Babel dan kembalilah ke Yerusalem. 8Siapa yang menyerang kamu, menyerang buah hatiku." Maka Tuhan Yang Mahakuasa menyuruh aku menyampaikan pesan ini kepada bangsa-bangsa yang telah merampoki umatnya. 9"Tuhan sendiri akan melawan kamu! Dan kamu akan dirampok oleh bekas hamba-hamba-mu sendiri. Bila hal itu terjadi, kamu akan tahu bahwa Tuhan Yang Manakuasa telah menyuruh aku." 10Tuhan berkata, "Bernyanyilah dengan gembira hai penduduk Yerusalem! Aku akan tinggal di tengah-tengahmu!" 11Pada masa itu banyak bangsa akan datang kepada Tuhan untuk menjadi umatnya. Ia akan tinggal di tengah-tengahmu, dan kam akan tahu bahwa Tuhan telah mengirimaaku kepadamu. 12Sekali lagi Yehuda akan menjadi milik khusus Tuhan di tanahnya yang suci, dan Yerusalem akan menjadi kota yang paling disayanginya. 13Diamlah kamu semua di hadapan Tuhan! Karena is telah berangkat dari tempat kediamannya di surga."

Terjemahan Lama (1879/1958)(TL)

TL as usual has an FC approach to the ST. It generally retains the forms, the imagery, the intensity and the urgency of the original prophecy.

Interestingly whereas RSV rendered הוֹי הוֹי with 'Ho! Ho!' TL prefers a more natural equivalent *Dengarlah! Dengarlah!* 'Listen! Listen!'.

Verse 7 Where the RSV preferred LXX 'Ho! Escape to Zion", the TL sticks with the MT *Dengarlah, hai Zion!* 'Listen O Zion'. TL does, however, drop 'daughter of Babylon' in favour of 'land of Babylon' though it retains 'daughter of Zion' in v.10.

Verse 8 The crux, אחר כבוד is rendered 'with glory', i.e. 'After he sent me with glory to all the nations that previously despoiled you'—another literalistic but hardly transparent reading.

Verses 10-13 are a literal translation of the MT with some accommodation to Malay-Indonesian in word order and in four passive renderings of verbs that are active in the ST.

Terjemahan Baru (1974)(TB)

The passage is given a title: *'Orang-orang buangan dipanggil pulang'* —'The exiles are called to come home' which we also find in GNB and later BIS.

The language is much more modern than that of the TL though the formal features of the ST are respected.

Verse 6 *'Ayo, Ayo'* 'Come here, come here' replace the TL's *Dengarlah, dengarlah* . This is somewhat more idiomatic but phonologically closer to the Hebrew.

Verse 7 TB also follows the LXX and RSV in interpolating 'Escape to (Zion)' whereas the TL had followed the MT and Dutch versions' 'O Zion'. Like the TL, TB does not retain 'daughter of Babylon'.

Verse 8 The troublesome אחר כבוד is rendered by a more natural and more intelligible 'in his glory (He has sent me)'.

Verses 9-13 TB uses clearer modern Indonesian but interestingly unlike the TL does not change any active verbs into passive forms.

Bahasa Indonesia Sehari-Hari (1985)(BIS)

The title given to Zech 2:6-13 is the same as that of TB and of GNB.

The first two verses are conflated and paraphrased along the lines of the GNB. In fact verse 6-7 are a translation of the GNB.

Verse 8 is also a straight translation of GNB except for one redeeming feature. For the image rendered 'apple of my eye' by the RSV, but paraphrased as 'what is most precious to me' in GNB, BIS supplies *buah hatiku* literally 'fruit of my heart'—a good natural equivalent.

Verses 9-13 are also a translation of the GNB. BIS adds two words at the end of verse 13—*di surga* i.e. '(His holy dwelling) in heaven'.

Conclusion

Zechariah 2:6-13 (Hebrew 2:10-17), our fourth sample text, is poetry. Whereas the preceding three visions of the prophet are related in dramatic narrative this oracle involves a distinct change of literary style, as well as speaker and audience.

The LXX and RSV by preserving the imperative verbs, imagery and Biblical allusions convey much of the urgency and intensity of the Hebrew ST.

The English GNB, however, produces a simplified, flat paraphrase which drops twelve figures of speech many of which are rooted in early Biblical traditions and

interwoven with them (e.g. 'land of the north', 'inheritance'). The dropping of anthropomorphic images (e.g. 'shake my hand', 'He has roused himself') also signal an important tendency of the GNB to sterilize language about God. The Lord is no longer allowed to 'bare His holy arm' or even stretch it out.

The Indonesia DE translation BIS can be shown to be a straight translation of the GNB. Only two points of independence are evident. The first is the provision of a good natural equivalent for 'the apple of his eye'. The second involved adding (gratuitously) 'in heaven' to 'from his holy dwelling' in verse 13.

This is a serious deficiency in a version which claims *"Teks Perjanjian Lama diterjemahkan dari Bahasa Ibrani"* —'The text of the Old Testament is translated from the Hebrew Language.'

TEXT 5 MARK 1:1-15

Introduction

The opening passage of The Gospel According to Mark introduces us to the 'gospel' genre. Of course when Mark uses the term in his heading he is referring to the content of his narrative rather than providing a literary designation. Nevertheless the term 'gospel' came to be applied to literary works of similar content even though Matthew refers to his work as a 'book' (βίβλος 1:1) and Luke speaks of his as a 'narrative' (διήγησις 1:1). Subsequently the term 'gospel' as a literary designation was applied by extension to other works which purported to convey a revelation of the message of Jesus even though they showed less interest in the biographical account of Jesus' earthly life and ministry and more in the revelatory discourses (e.g., The Gospel of Thomas). Mark's claim accepted by the early church, that the narrative was the 'gospel' of God about a promised salvation fulfilled in the ministry of Jesus, makes the canonical (and related non-canonical) gospels a distinctive sub-category of Greco-Roman biography.[1]

It is not insignificant that the first volume published in the *Helps for Translators* series, produced by the United Bible Societies (UBS), is *A Translators Handbook on the Gospel of Mark* by Robert G Bratcher and Eugene A Nida (1961). This impressive series, much used by Bible translators, now numbers over 50 volumes most of which are authored or co-authored by Nida, Bratcher or Barclay Newman.

These *Translators Handbooks* and a more recent series of *Translators Guides* purport not to usurp the role of exegetical commentaries but to help translators working in languages outside the Indo-European family which throw up very different questions and problems from those addressed in European commentaries. Thus a TL may have obligatory linguistic categories that are not present in Hebrew, Greek or English, e.g. inclusive and exclusive pronouns, or honorifics indicating the relative social status of the participants in any communication.

Handbooks printed subsequent to *Mark* employed a GNB running text, though with a statement claiming that they have been prepared essentially on the basis of the original text.[2] More recently Handbooks have provided both RSV and GNB texts verse by

---

1 For a discussion of genre, see D.E. Aune, *The New Testament in its Literary Environment* (Library of Early Christianity, 8) (Philadelphia: Westminster Press, 1987) 17-76; F.J. Matera, *What are They Saying about Mark?* (New York: Paulist Press, 1987) 75-85; C.H. Talbert, 'What is a Gospel?', *Semeia* 43 (1988) 53-73.

2 e.g., J. De Waard and E.A. Nida, *A Translators Handbook on the Book of Ruth* (London: UBS, 1973), 5

verse in parallel columns. This is because 'workers in the field discovered that the Revised Standard Version makes a better base for discussion than does the Good News Bible (Today's English Version) especially for explaining the form and function of the ancient Hebrew text to translators who have not been taught Hebrew; the authors therefore had to revise their work which had been based on GNB, and use RSV instead'.[3]

GREEK TEXT OF MARK 1:1-15

1 Ἀρχὴ τοῦ εὐαγγελίου Ἰησοῦ Χριστοῦ ‘υἱοῦ θεοῦ’. ¤2 Καθὼς
γέγραπται ἐν ‘τῷ Ἠσαΐᾳ τῷ προφήτῃ’ ·
ἰδοὺ ᵀἀποστέλλω τὸν ἄγγελόν μου πρὸ προσώπου σου,
ὃς κατασκευάσει τὴν ὁδόν σουᵀ ·
3 φωνὴ βοῶντος ἐν τῇ ἐρήμῳ·
ἑτοιμάσατε τὴν ὁδὸν κυρίου,
εὐθείας ποιεῖτε τὰς τρίβους ⌜αὐτοῦ :ᵀ ⌝
4 ἐγένετο Ἰωάννης ⌜ὁ⌝ βαπτίζων ἐν τῇ ἐρήμῳ καὶ⌝ κηρύσσων
βάπτισμα μετανοίας εἰς ἄφεσιν ἁμαρτιῶν. 5 καὶ
ἐξεπορεύετο πρὸς αὐτὸν πᾶσα ἡ Ἰουδαία χώρα καὶ οἱ
Ἱεροσολυμῖται πάντες, καὶ ἐβαπτίζοντο ‘ὑπ’ αὐτοῦ ἐν τῷ Ἰορδάνῃ
ποταμῷ⌝ ἐξομολογούμενοι τὰς ἁμαρτίας αὐτῶν. 6 ‘καὶ ἦν ὁ Ἰωάννης⌝
ἐνδεδυμένος ⌜τρίχας καμήλου ¤καὶ ζώνην δερματίνην περὶ τὴν ὀσφὺν
αὐτοῦ⌝ καὶ ἐσθίων ἀκρίδας καὶ μέλι ἄγριον.
7 Καὶ ἐκήρυσσεν λέγων· * ἔρχεται ὁ ἰσχυρότερός μου ὀπίσω °μου,
οὗ οὐκ εἰμὶ ἱκανὸς °¹κύψας λῦσαι τὸν ἱμάντα τῶν ὑποδημάτων
αὐτοῦ. 8 ἐγὼ ἐβάπτισα ὑμᾶςᵀ ὕδατι, αὐτὸς δὲ βαπτίσει ὑμᾶς ° ἐν
πνεύματι ἁγίῳ. 9 Καὶ ἐγένετο⌝ ἐν ἐκείναις ταῖς ἡμέραις ἦλθεν Ἰησοῦς
ἀπὸ Ναζαρὲτ τῆς Γαλιλαίας καὶ ἐβαπτίσθη εἰς τὸν Ἰορδάνην ὑπὸ
Ἰωάννου. 10 καὶ εὐθὺς ἀναβαίνων ἐκ τοῦ ὕδατος εἶδεν σχιζομένους
τοὺς οὐρανοὺς καὶ τὸ πνεῦμα ὡς περιστερὰν καταβαῖνον ᵀ ⌜εἰς
αὐτόν· 11 καὶ φωνὴ ‘ ἐγένετο ἐκ τῶν οὐρανῶν⌝ · Σὺ εἶ ὁ υἱός μου ὁ
ἀγαπητός, ἐν σοὶ εὐδόκησα.
12 Καὶ εὐθὺς τὸ πνεῦμα αὐτὸν ἐκβάλλει εἰς τὴν ἔρημον. 13 καὶ ἦν
‘ ἐν τῇ ἐρήμῳ⌝ τεσσεράκοντα ἡμέρας πειραζόμενος ὑπὸ τοῦ σατανᾶ,
καὶ ἦν μετὰ τῶν θηρίων, *καὶ οἱ ἄγγελοι διηκόνουν αὐτῷ.

---

3 R. Bratcher and W. Reyburn , *A Translators Handbook on The Book of Psalms* , (New York: UBS, 1991), 9.

14 ‘ Μετὰ δὲ᾽ τὸ παραδοθῆναι τὸν ᾽Ιωάννην ἦλθεν ὁ ᾽Ιησοῦς εἰς τὴν Γαλιλαίαν *κηρύσσων τὸ εὐαγγέλιον ᵀ τοῦ θεοῦ 15 ‘καὶ λέγων᾽ ὅτι πεπλήρωται ὁ καιρὸς᾽ καὶ ἤγγικεν ἡ βασιλεία τοῦ θεοῦ· μετανοεῖτε καὶ πιστεύετε ἐν τῷ εὐαγγελίῳ.

The Greek Text

The basic text for the New Testament used in GNB is *The Greek New Testament* published by the UBS (3rd edition, 1975). It is salutary that the Introduction includes a tribute to the 1960's initiative of E.A. Nida in transforming the revision of the Nestle-Aland 25th edition (1963) into an international ecumenical effort:

> By his enthusiasm, understanding and skill E.A. Nida succeeded not only in gaining the support of the Bible Societies (at first the American Bible Society, the Württemburg Bible Society, and the National Bible Society of Scotland, then later also the Netherlands Bible Society and the British and Foreign Bible Society) but also in achieving the continued cooperation of the Editorial Committee (K. Aland/Münster, M. Black/St Andrews, B.M. Metzger/Princeton, A Wikgren/Chicago; at an early stage A. Vööbus was also a member, and later his place was taken by C.M. Martini/Rome) throughout the extensive and arduous labours that eventually produced the First Edition of *The Greek New Testament* in 1966.

Eugene Nida's involvement in this great enterprise was of course motivated by the need for an authoritative form of the NT Text with a critical apparatus and format that would be most useful to Bible translators worldwide.

Verse 1 With regard to our passage the first issue is the status of verse 1 which seems to have the form of a title or a heading. It begins with an anarthrous noun and has no verb. Is it then a superscription for the whole Gospel or simply a heading for the initial section concerning the 'beginning of the gospel'?[4] Comparable constructions cited from the LXX included Hos 1:2; Prov 1:1; Eccl 1:1; Cant 1:1; as well as Matt 1:1 and Rev 1:1. Studies of the use of καθώς (which begins verse 2) show that it relates to the preceding rather than the following material. Verse 2 then requires a close syntactical relationship with verse 1. This indicates that verse 1 provides the heading of the initial section only the extent of which would require further investigation (e.g. verses 1-3; 1-4; or 1-15).

A second question arising in the text of verse 1 is the status of 'Son of God' (υἱοῦ θεοῦ) which is missing in some of the earliest MSS. Given the tendency of some copyists to expand titles, the originality of the phrase may be doubted. On the other hand the support of MSS BDW et al is strong. Furthermore the internal evidence

---

4 For a full discussion, see R.H. Gundry, *Mark: A Commentary on his Apology for the Cross* (Grand Rapids: Wm.B. Eerdmans, 1993) 29-36.

favours its retention. Not only does Mark use the title to introduce Jesus in 1:11 but the Roman centurion's confession of 15:39 provides a climactic counterpart (cf. 1:11; 5:7; 9:7; 14:61). It is difficult to explain the omission of the phrase in early MSS. The most plausible explanation is that the series of six genitive endings caused error to occur. Such homoioteleuton (i.e. similar endings of lines) frequently leads to accidental omissions by copyists.[5]

Verses 2 and 3 The editors wisely follow the older MSS which attribute to 'the Prophet Isaiah' the evangelist's composite quotation from both Malachi and Isaiah. The Authorized Version had followed later MSS which read 'as written in the prophets', an obvious amelioration of the puzzling original.

Verse 4 There is a question as to whether ὁ βαπτίζων is original or just βαπτίζων. It is probably easier to account for the addition of the article than its deletion thus making the participle adverbial rather than adjectival. The appearance of the article could well have been a result of the influence of the common reference to John in the Synoptics as ὁ βαπτιστής.

Verse 8 The UBS committee opted to include ἐν before πνεύματι but not before the earlier ὕδατι. Their decision reflects the weight of MSS evidence and the likehood that the former was assimilated to the latter in those MSS that have the preposition before ὕδατι also.

THE ENGLISH VERSIONS

RSV 1952

1 The beginning of the gospel of
Jesus Christ, the Son of God. [2]As it
is written in Isaiah the prophet,

"Behold, I send my messenger
before thy face, who shall prepare
thy way; [3]the voice of one crying
in the wilderness: Prepare the
way of the Lord, make his paths
straight—"

[4]John the baptizer appeared in the
wilderness, preaching a baptism of
repentance for the forgiveness of
sins. [5]and there went out to him all
the country of Judea, and all the
people of Jerusalem; and they were

GNB 1976

The Preaching of John the Baptist

1 This is the Good News about
Jesus Christ, the Son of God. [2]It
began as the prophet Isaiah had
written:

"God said, 'I will send my
messenger ahead of you to clear
the way for you.'

[3]Someone is shouting in the
desert, 'Get the road ready for
the Lord; make a straight path
for him to travel!'

[4]So John appeared in the desert,

---

5 R.H. Gundry, *Mark: A Commentary on his Apology for the Cross* (Grand Rapids: Wm.B. Eerdmans, 1993) 33

baptized by him in the river Jordan, confessing their sins. 6Now John was clothed with camel's hair, and had a leather girdle around his waist, and ate locusts and wild honey. 7And he preached saying, "After me comes he who is mightier than I, the thong of whose sandals I am not worthy to stoop down and untie. 8I have baptized you with water; but he will baptize you with the Holy Spirit."
9In those days Jesus came from Nazareth of Galilee and was baptized by John in the Jordan. 10And when he came up out of the water, immediately he saw the heavens opened and the Spirit descending upon him like a dove; 11and a voice came from heaven, "Thou are my beloved Son; and with thee I am well pleased." 12The Spirit immediately drove him out into the wilderness. 13And he was in the wilderness forty days, tempted by Satan; and he was with the wild beasts; and the angels ministered to him. 14Now After John was arrested, Jesus came into Galilee, preaching the gospel of God, 15and saying, "The time is fulfilled, and the kingdom of God is at hand; repent, and believe in the gospel."

baptizing and preaching. "turn away from you sins and be baptized," he told the people, "and God will forgive you sins." 5Many people from the province of Judaea and the city of Jerusalem went out to hear John. They confessed their sins, and he baptized them in the River Jordan. 6John wore clothes made of camel's hair, with a leather belt round his waist, and his food was locusts and wild honey. 7He announced to the people, "The man who will come after me is much greater than I am. I am not good enough even to bend down and untie his sandals. 8I baptize you with water, but he will baptize you with the Holy Spirit."

The Baptism and Temptation of Jesus

9Not long afterwards Jesus came from Nazareth in the province of Galilee, and was baptized by John in the Jordan. 10As soon as Jesus came up out of the water, he saw heaven opening and the Spirit coming down on him like a dove. 11And a voice came from heaven, "You are my own dear Son. I am pleased with you." 12At once the Spirit made him go into the desert, 13where he stayed forty days, being tempted by Satan. Wild animals were there also, but angels came and helped him.

Jesus Calls Four Fishermen

14After John had been put in prison, Jesus went to Galilee. 15"The right time has come," he said, "and the Kingdom of God is near! Turn away from your sins and believe the Good News!"

The Revised Standard Version (1952)(RSV)

The Revised Standard Version of the New Testament, first published in 1946, was an authorized revision of the American Standard Version of 1901, which was a revision of the Authorized or King James Version of 1611. The translators were very aware of the huge body of Greek papyri unearthed particularly in Egypt since the production of the English Revised Version of 1881 and its variant ASV (1901) mentioned above.

They adopted an eclectic principle assessing each variant reading on its merits, though generally agreeing with the 17th edition of Nestlé (Stuttgart 1941).[6] They were also very aware of the truth of Charles Spurgeon's pithy criticism of the ERV when it appeared—that it was 'strong in Greek, weak in English'.

A Second Edition of the RSV was published in 1971 with some minor changes. The Introduction states: 'Certain passages omitted because of dispute in the earlier version are not restored, though separated from the rest of the text and their problems noted. Notes are also added which indicate significant variations or omissions in the ancient manuscripts.'

Social changes in the 1960s and 1970s, including a relaxation in formal styles of worship and the concern about gender-biased language, resulted in the production of a New Revised Standard Version in 1990. However our comparison will continue to be between the RSV and GNB because in practice these have been the main reference points for Bible translators.

Verses 1-15 The RSV follows the Greek text closely using English that reproduces the unpretentious direct style of the original. The translation of the initial καὶ by 'and' is not natural English. Of the nine occurrences of initial καὶ the RSV does not reproduce two, renders one by 'Now' and six by 'And'.

The use of 'thy' in verse 2 is archaic but consistent with the RSV policy of using contemporary English **except** for speech address to God in which 'thees' and 'thous' are retained. This compromise was adopted for the NEB also and seemed satisfactory for the seventies. But of course neither the original texts nor the KJV made any distinction between speech to God and speech to humans.

The RSV treats verse 1 as a heading and relates verses 2 and 3 to verse 4. In verse 4 RSV assumes that the definite article before the participle βαπτίζων is original.

The RSV woodenly renders Mark's distinctive καὶ εὐθύς by 'immediately', but does drop the Hebraistic narrative marker καὶ ἐγένετο 'and it came to pass' in verse 9.

---

6 See F.C. Grant , *An Introduction to the RSV of the NT* (ed. L.A. Weigle; New York: International Council of Religious Education, 1946), 41

The Good News Bible (1966, 1976)(GNB)

A section heading is given for 1:1-8 *The Preaching of John the Baptist* . To clarify the distinctiveness of the GNB renderings they are printed again verse by verse alongside the RSV.

	GNB	RSV
1:1	This is the Good News about Jesus Christ, the Son of God	The beginning of the gospel of Jesus Christ, the Son of God

GNB understands verse 1 to be a title for the whole Gospel and defers 'beginning' till verse 2 to relate with what immediately follows. Here DE principles have led to greater emphasis on clarifying the implicit relationship between the terms 'beginning', 'gospel', 'Jesus Christ', and 'Son of God' than on the function of the verse as a whole.

The use of 'Good News' as an explanation of the term εὐαγγέλιον is influenced more by the etymology of the English word 'gospel' (and an imagined LXX background) than by actual usage in the NT.

Most of the 70 NT occurrences are in Paul. There are none in the LXX (*pace* Kittel et al). Instances of the plural εὐαγγέλια in the language of the Imperial cult have been proposed as a plausible background. Against this must be placed the frequent LXX use of the cognate verb εὐαγγελίζομαι (particularly in Isaiah 40–66), which represents the Hebrew בשׂר, 'to announce or deliver a (good or bad) message' (e.g., 1 Kgs 1:42; Jer 20:15). This verb is used in the Psalms (40:9; 68:11; 96:2ff) and Isaiah (41:27; 52:7) to announce Yahweh's victory over the world.

In the NT it is made clear that Jesus understood his own mission in the light of Isaiah 61:1-2 (see Matt 11:2-6), as the messianic evangelist of the poor. His preaching of God's kingly rule (Mark 1:15) is the בשׂרה (message of peace) of Isa 52:7. The term εὐαγγέλιον is attributed to Jesus on a number of occasions (Mark 1:15; 8:35; 10:29; 13:10; 14:9; Matt 24:14; 26:13). Jesus 'appears not only as the messenger and the author of the message, but at the same time its subject, the one of whom the message tells.'[7]

So when Paul frequently uses the noun εὐαγγέλιον absolutely, we can assume it was already a technical term in early Christian vocabulary. Paul would have been well aware of its use in the Imperial cult, but as J.A. Fitzmyer has observed, 'the fact that Paul deliberately quotes Isa 52:7 in Rom 10:15, precisely in a context in which he is

---

7 U. Becker, 'Gospel, Evangelise, Evangelist', in *NIDNTT*, II, 110.

speaking of the preaching of the "gospel" (10:16), shows that his notion of *euangelion* is heavily dependent on the Old Testament idea of God's herald and his message.'[8] It is curious that both John and the writer to the Hebrews avoid using εὐαγγέλιον, possibly precisely because of its Graeco-Roman associations. If we allow NT usage to determine the meaning of the word, the connotation 'good' is less obvious than that of 'authority'.

	GNB	RSV
1:2	It began as the prophet Isaiah had written: God said, "I will send my messenger ahead of you to open the way for you:	As it is written in Isaiah the prophet, "Behold I send my messenger before they face, who shall prepare thy way"

GNB introduces 'It began' deferred from verse 1 and restructures the clause in the active with Isaiah as subject. This weakens the force of the 'it is written' (cf. 7:6; 9:12, 13; 10:4, 5; 11:17; 12:19; 14:21, 27) where γέγραπται connotes permanent Scriptural authority.

'God said' is interpolated apparently to make it clear that the words following do not originate from the prophet. But the formulaic 'Behold' is dropped.

	GNB	RSV
1:3	Someone is shouting in the desert: "Get the road ready for the Lord; make a straight path for him to travel!"	The voice of one crying in the wilderness: "Prepare the way of Lord, make his paths straight".

The Semitic idiom 'The voice of one crying;' introducing direct discourse is replaced by a more natural English sentence. The GNB's 'shouting' is better than the RSV's 'crying' which could be misunderstood. Both versions preserve the parallelism of Isaiah 40:3 (quoted from LXX) though the GNB is more long winded.

---

8 quoted in P.T. O'Brien, 'The Gospel in Philippians', in *God who is Rich in Mercy: Essays presented to Dr D.B.Knox*, P.T. O'Brien and D.G. Peterson, eds., (Homebush West, NSW: Lancer Books, 1986), 215.

	GNB	RSV
1:4	So John appeared in the desert, baptizing and preaching. "Turn away from your sins and be baptized", he told the people, "and God will forgive your sins".	John the baptizer appeared in the wilderness preaching a baptism of repentance for the forgiveness of sins

Nida often hails this GNB rendering as a fine example of DE translation of a verse which has both dense terms (e.g. 'forgiveness', 'repentance', 'sin', 'baptize') and complex syntax.

However Nida fails to acknowledge that Mark could have written his report of John's preaching along the lines of the radical restructuring in the GNB had he wished to do so, as does Luke in his report of Peter's call to baptism in Acts 2:38. But we are stuck with the condensed summary that Mark preferred and which English is perfectly capable of reproducing.

The GNB rendering also involves quite a few important exegetical decisions. What does 'preaching a baptism of repentance for the forgiveness of sins' mean? The NEB rendering 'a baptism in token of repentance' drew attention to one of the latent issues—the force of the genitive. Rather than 'in token of repentance' the GNB translation suggests that is a prerequisite for baptism. Moreover we might ask who forgives sins? Only John is mentioned in the text.

The GNB rendering represents the thoroughgoing application of three DE principles: firstly that the text can intend only one possible relationship between the terms, secondly that the translation must make that implicit relationship explicit, and thirdly a total recasting of the form of the SL is justified if this enables it to retain its force in the RL. Thus 'baptism', 'repentance', and 'forgiveness' have all disappeared as nouns and reemerge as verbal forms to show who does what to whom in each case. 'Preaching a/the baptism' has become 'preaching his message' the terms of which are 'be baptized'. 'Repentance' has become 'turn away from your sins' and 'forgiveness of sins' has become 'God will forgive your sins'.

Thus a whole series of decisions have been made about syntactic and logical relations not to mention the important lexical decision about the meaning of 'repentance'. This reoccurs in verse 15. The GNB translation of verse 4 is undoubtedly clearer than other

versions but whether the meaning has been rightly grasped and rendered may be open to contention.[9]

	GNB	RSV
1:5	Many people from the province of Judea and the city of Jerusalem went out to hear John. They confessed their sins, and he baptized them in the Jordan River.	And there went out to him all the country of Judea, and all the people of Jerusalem; and they were baptized by him in the river Jordan, confessing their sins.

Bratcher says that a literal translation of the first clause such as the RSV's is undesirable as the language is exaggerated![10] The GNB makes explicit that the people went out 'to hear John'.

	GNB	RSV
1:6	John wore clothes made of camel's hair, with a leather belt around his waist, and his food was locusts and wild honey	Now John was clothed with camel's hair and had a leather girdle around his waist and ate locusts and wild honey

The GNB drops the narrative marker and replaces the archaic 'girdle'.

	GNB	RSV
1:7	He announced to the people, The man who will come after me is much greater than I am. I am not good enough even to bend down and untie his sandals	And he preached, saying "After me comes he who is mightier than I, the thong of whose sandals I am not worthy to stoop down and untie"

GNB drops the unnatural 'And' (kaiv) and breaks the passage up into two sentences.

After verse 8 in which the GNB is virtually identical with the RSV, the GNB inserts a heading for verses 9-13: '*The Baptism and Temptation of Jesus.*'

Verses 9-13 The differences between the GNB and RSV are minimal. The GNB breaks up both verses 11 and 13 into two sentences and uses slightly more modern English.

After verse 13 the GNB inserts a heading for verses 14-20: '*Jesus Calls Four Fishermen.*'

---

9 See the helpful article by L. Williamson 'Translations and Interpretation', *Interpretation* 32:2 (1978) 158-70.

10 R. Bratcher and E.A. Nida, *A Translators Guide to The Gospel of Mark*, (Leiden: Brill, 1961) 6

	GNB	RSV
1:14	After John had been put in prison Jesus went to Galilee and preached the Good News from God	Now after John was arrested, Jesus came into Galilee, preaching the gospel of God

We have already stated above (see on 1:1) that εὐαγγέλιον is best translated 'gospel'—a word that has long since entered English (and its equivalent in other major languages) rather than 'good news'. NT usage suggest connotations of authority rather than goodness.

Here there is another interpretative problem concerning the relation of 'gospel' and 'God'. Is the genitive τοῦ θεοῦ here an objective genitive ('about God'), or a genitive of sources as GNB assumes, or a possessive genitive? The KJV, following a textual tradition now generally rejected, had 'the gospel of the kingdom of God'. Clearly in that phrase the genitive could be objective or possessive. But if one translates literally as does the RSV then 'the gospel of God' preserves all three exegetical options.

	GNB	RSV
1:15	"The right time has come", he said and the Kingdom of god is near! Turn away from your sins and believe the Good News"	and saying , 'The time is fulfilled, and the kingdom of God is close at hand; repent, and believe in the gospel."

Again the text confront us with many exegetical queries. GNB's wish to preserve a (doubtful) distinction between χρόνος and καιρός has translated the latter 'the right time'. 'Has come' replaces 'is fulfilled' (πεπλήρωται) as in JB and NEB. This is unfortunate as it weakens the undoubted assumptions of Divine promise and fulfilment which is such a key theme of the NT documents including Mark.

In verse 15b the translation of ἤγγικεν is also problematic. The King James tradition (i.e. KJV, RV, RSV) had 'the kingdom of God is at hand'. NEB has 'the kingdom of God is close at hand'. The issue is whether in this text the kingdom is announced as imminent or present. GNB (cf JB) favours a future but imminent eschatology whereas RSV conveys a more ambivalent impression—both future and realized.

In 15c GNB explains 'repent' as 'turn away from your sins'. Most commentators would see echoes of the Hebrew OT שׁוּב here involving a deliberate turning of heart and will (expressed in change of conduct). GNB has opted for clarity and explicitness by focusing on conduct, but with the risk of diminishing the aspect of 'change of

heart'. Nida and Bratcher could well reply that 'repent' is a somewhat fuzzy ecclesiastical word. This is a difficult issue but my purpose is to show how translators' decisions can incline readers toward (or even lock them into!) particular understandings of the text. This is all the more significant when as we have seen the GNB is also being used as a model for BT into many other languages.

THE INDONESIAN VERSIONS

TL 1938/1958

Pekerdjaan Jahja Pembaptis

1 Bahwa inilah permulaan Indjil dari hal Jésus Keristus, Anak Allah. *(Mat.3:1-12; Luk.3:1-18; Jahj. 1:19-30.)* 2Seperti jan tersurat didalam kitab nabi Jesaja, bunjinja: ‚Sesungguhnja, Aku menjuruhkan utusanku dahulu daripadamu jang akan menjediakan djalanmu.' *(Mal.3:1; Mat. 11:10.)* 3„Adalah suara orang jan berseru-seru dipadang belantara: ‚Sediakanlah djalan Tuhan dan luruskanlah lorong-lorongnja!" *(Jes.40:3)* 4Maka datanglah Jahja membaptiskan orang dipadang belantara, serta mengchabarkan baptisan tobat, djalan keampunan dosa. 5Tatkala itu keluar seisi tanah Jahudi serta segala orang isi negeri Jeruzalem mendapatkan Jahja, lalu mereka itu dibaptiskannja didalam sungai Jarden, sambil mereka itu mengaku dosanja. 6Maka pakaian Jahja daripada bulu unta dan ikat pinggangnja daripada kulit, maka makanannja belalang dan air madu hutan. 7Maka ia mengadjar orang, katanja: „Kemudian daripada aku ini

TB 1974

Yohanes Pembaptis 1:1-8
Mat 3:1, 11-12 Luk 3:3-6, 15-17 Yoh 1:19-28

1 Inilah permulaan Injil tentang Yesus Kristus, Anak Allah.
2Seperti ada tertulis dalam kitab :
”Lihatlah, Aku menyuruh
utusanKu mendahului Engkau,
ia akan mempersiapkan jalan
bagiMu;
3ada suara orang yan berseru-
seru di padang gurun:
Persiapkanlah jalan untuk
Tuhan, luruskanlah jalan
bagiNya,”
4demikianlah Yohanes Pembaptis tampil di padang gurun dan menyerukan: ”Bertobatlah dan berilah dirimu dibaptis dan Allah akan mengampuni dosamu.” 5Lalu datanglah depadanya orang-orang dari seluruh daerah Yudea dan semua penduduk Yerusalem, dan sambil mengaku dosanya mereka dibaptis di sungai Yordan. 7Yohanes memakai jubah bulu unta dan ikat pinggang kulit, dan makanannya belalang dan madu hutan. Inilah yang

akan datang kelak seorang jang lebih berkuasa daripadaku, maka tunduk menguraikan tali kasutnjapun aku ini tiada berlajak. 8Adapun aku membaptiskan kamu dengan air, tetapi Ia akan membaptiskan kamu dengan Rohu'lkudus." 9Pada masa itu datanglah Jésus dari Nazaret ditanah Galilea, lalu Jahja membaptiskan Dia didalam sungai Jarden. (*Mat.3:13-17; Luk. 2:51; 3:21, 22; Jahj. 1:31-34.*) 10Maka ketika Ia naik keluar dari air itu, dilihatnja langit terbelah, serta Roh Allah turun ketasnja seperti seekor burung merpati. 11Lalu kedengaranlah suatu suara dari langit, mengatakan: „Engkau inilah Anakku jang Kukasihi, kepadamu djuga Aku berkenan!" (*fs. 9:7*)

Iblis mentjobai Tuhan Jésus
Mat.4:1-11; Luk.4:1-13.

12Pada masa itu djuga Roh membawa Jésus kepadang belantara. 13Adalah Ia dipadang belantara itu empat puluh hari lamanja ditjobai oleh Iblis, maka Ia hidup diantara binatang-binatang jang buas, tetapi malaekatpun melajani Dia.

Pekerdjaan Tuhan Jésus ditanah Galilea
Mat. 4:12-17; Luk.4:14,15.

14Setelah Jahja itu sudah tertangkap, datanglah Jésus ketanah Galilea memasjhurkan Indjil Allah, 15serta berkata: „Waktunja sudah sampai, keradjaan Allah sudah dekat. Bertobatlah kamu dan pertjayalah akan Indjil itu."

diberitakannya: "Sesudah aku akan datang Ia yang lebih berkuasa dari padaku; membungkuk dan membuka tali kasutNyapun aku tidak layak. 8Aku membaptis kamu dengan air, tetapi Ia akan membaptis kamu dengan Roh Kudus."

ay 2: Mal 3:1 an 3: Yes 40:3
ay 6: 2 Raj 1:8

Yesus dibaptis Yohanes 1: 9-11
Mat 3:13-17 Luk 3:21-22 Yoh 1:32-34

9Pada waktu itu datanglah Yesus dari Nazaret di tanah Galilea, dan Ia dibaptis di sungai Yordan oleh Yohanes. 10 Pada saat Ia keluar dari air, Ia melihat langit terkoyak, dan Roh seperti burung merpati turun ke atasNya. 11Lalu terdengarlah suara dari sorga: "Engkaulah Anak yang Kukasihi, kepadaMulah Aku berkenan."

ay 11: Kej 22:2, Mzm 2:7, Yes 42:1, Mat 3:17, 12:18, Mrk 9:7, Luk 3:22

Pencoban di padang gurun 1:12-13
Mat 4:1-11 Luk 4:1-13

12Segera sesudah itu Roh memimpin Dia ke padang gurun. 13Di padang gurun itu Ia tinggal empat puluh hari lamanya, dicobai oleh Iblis. Ia berada di sana di antara binatang-binatang liar dan malaikat-malaikat melayani Dia.

Yesus tampil di Galilea 1:14-15
Mat 4:12-17 Luk 4:14-15

14Sesudah Yohanes ditangkap datanglah Yesus ke Galilea memberitakan Injil Allah, 15kataNya: "Waktunya telah genap; Kerajaan Allah sudah dekat. Bertobatlah dan percayalah kepada Injil!"

ay 15: Mat 3:2

Khotbah Yohanes Pembaptis
(Mat.3:1; Luk.3:1-18; Yoh.1:19-28)

1 Inilah Kabar Baik tetang Yesus Kristus, Anak Allah. 2Kabar
Baik itu mulai seperti yang ditulis oleh Nabi Yesaya, begini,
'"Inilah utusanku, ' kata Allah;
' Aku mengutus dia lebih dahulu daripadamu,
supaya ia membuka jalan untukmu.'
3 Ada orang berseru-seru di padang pasir,
'Siapkanlah jalan untuk Tuhan;
ratakanlah jalan-jalan yang akan dilewatinya.'"
4Seperti yang tertulis itu, begitulah juga muncul Yohanes di padang gurun. Ia membaptis orang dan menyampaikan berita dari Allah. "Kamu harus bertobat dari dosa-dosamu dan harus dibaptis, supaya Allah mengampuni kamu, " begitu kata Yohanes. 5Semua orang dari negeri Yudea dan kota Yerusalem pergi mendengar Yohanes. Mereka mengaku dosa-dosa mereka, dan Yohanes membaptis mereka di Sungai Yordan. 6Yohanes memakai pakaian dari bulu unta. Ikat pinggangnya dari kulit , dan makanannya belalang dan madu hutan. 7Ia mengabarkan berita ini, "Nanti sesudah saya, akan datang orang yang lebih besar daripada saya. Untuk tunduk membuka tali sepatunya pun, saya tidak layak. 8Saya membaptis kamu dengan air, tetapi ia akan membaptis kamu dengan Roh Allah."

Yohanes membaptis Yesus
(Mat. 3:13-17; Luk.3:21-22)

9Pada waktu itu Yesus datang dari Nazaret di daerah Galilea, dan Yohanes membaptis dia di Sungai Yordan. 10Begitu Yesus keluar dari sungai itu, ia melihat langit terbuka dan Roh Allah turun seperti burung merpati ke atasnya. 11Kemudian terdengar suara Allah mengatakan, "Engkaulah Anakku yang kukasihi. Engkau menyenangkan hatiku."

Yesus dicobai oleh Iblis
(Mat. 4:1-11; Luk.4:1-13)

12Langsung sesudah itu Roh Allah membuat Yesus pergi ke padang gurun. 13Empat puluh hari ia berada di situ, dicobai oley Iblis. Binatang-binatang liar ada juga bersama-sama dengan dia di situ, dan malaikat-malaikat melayani dia.

Yesus memanggil empat nelayan
(Mat.4:12-22; Luk.4:14-15, 5:1-11)

14Setalah Yohanes dipenjarakan, Yesus pergi ke Galilea, dan mengabarkan Kabar Baik dari Allah di sana. 15Katanya, "Allah segera akan mulai memerintah. Bertobatlah dari dosa-dosamu, dan percayalah akan Kabar Baik yang dari Allah!"

Terjemahan Lama (1938/1958)(TL)

The official title of the book is interesting: *Kitab Injil Karangan Markus*—literally 'Gospel Book Composition of Mark'.

Both *Kitab* and *Injil* are Arabic loan words reminding us of the tremendous influence of Islam on the Malay and Indonesian cultures such that Arabic (as well as the Sanskrit of the earlier Hindu and Buddhist Kingdoms) has provided much vocabulary not least in matters of religion.

Format

TL then proceeds to provide section headings. These are found throughout the NT whereas none were provided in the Old Testament. The Old Testament was the work of H.C. Klinkert, originally published in 1879. The NT translation is by WA Bode, and was first published in 1938. These two separate works were published together as one Bible in 1958. The two works were an interim measure until a new translation could be completed—hence the lack of consistency between the two Testaments.

The section heading provided for chapter 1, verses 1-11 is *Perkerdjaan Jahja Pembaptis*—'The Work of John the Baptist'.

Another unusual feature of this versions of the NT is the series of cross references printed in brackets at the end of each verse.

Translation

Verse 1 This, which we noted in the original ST to be a verbless heading, is rendered as a complete sentence in the TL.

Verse 2 In an unusual feature ijdouv is rendered by *Susungguhnya* 'Truly'. No doubt functionally this serves to underline the solemnity of the prophetic quotation even if the literal meaning is different. 'Book' *kitab* of the prophet Isaiah is also supplied.

Verse 4 'John comes baptizing people in the desert', i.e. the participle βαπτίζων is read without the article and an object 'people' is supplied as would be more natural in Indonesian.

'And announcing a baptism of repentance the way of forgiveness of sin' is an interesting rendering in view of our earlier discussion (under GNB) of the exegetical possibilities of this compact clause. In Bahasa Indonesia eij" could have been translated literally by *untuk*.

Verse 5 TL supplies a classifier *negeri* before 'Jerusalem'—but *negeri* in modern Indonesian means 'state' or 'country' not 'city'.

Verse 7 TL renders καὶ ἐκήρυσσεν λέγων by 'so he **taught** people, saying' a surprising rendering of κηρύσσω.

Verse 9 TL supplies a classifier *tanah* 'land of' before Galilee.

Verse 11 TL makes another concession to natural Indonesian by rendering **'Thou has heard** a voice from heaven saying...'

Another section heading follows for verses 12-13 *Iblis Mentjobai Tuhan Jesus*—'Satan Tempts the Lord Jesus'.

Verse 12 TL renders καὶ εὐθύς by 'At that time also' *Pada masa itu djuga* thus providing a suitable natural equivalent for the ST's narrative marker.

A new section heading is provided for verses 14-45: *Pekerdjaan Tuhan Jesus ditanah Galilea* —'The Work of the Lord Jesus in the land of Galilee'.

Verses 14-15 The translation of these two verses is fairly literal. But mindful of the exegetical issues already raised it is worth noting that the *Indjil Allah* would most naturally imply 'God's gospel'. *Waktunja sudah sampai, keradjaan Allah sudah dekat* back translated into English reads: 'The time has already *arrived*, the kingdom of God is *already near*.' The note of fulfilment of the divine promise is not as strong as in those translations which give full value to πεπλήρωται.

In summary the TL rendering of Mark 1:1-15 is a FC translation with less archaic language than the TL Old Testament and with more concessions to naturalness in narrative flow than the RSV.

Terjemahan Baru (1974)(TB)

The TB's title is reduced to *Injil Markus* —'Gospel of Mark'.

Format

There are now nine section headings for the chapters instead of TL's three headings. Some cross references are included but these are placed immediately after the section headings rather than after each verse (as in TL).

Translation

There is a section heading *Yohanes Pembaptis* for 1:1-8

TB makes the first verse a complete sentence. Unlike TL it does not separate verse 2 from verse 1 thus obscuring the function of verse 1 as a heading.

Verse 2 The classifier *kitab* 'book' is retained before *nabi isaja* but 'Look' replaces 'Truly' as the literal rendering of ἰδού.

Verse 4a This verse is assumed to be original in the ST so, unlike TL, the participle is treated as a title *Yohanes Pembaptis* .

Verse 4b Nida's recommended paraphrase appears as it had already done in the TEV NT (1966) so the condensed summary of John's preaching is replaced by direct speech: 'Repent and give yourself to be baptized and God will forgive your sin(s)'. This is startling evidence of Nida's influence in what would be considered an FC version.

Verses 5-8 follow the Greek closely. Though the renderings of the Greek connective καί are flexible and natural.

Verses 9-11 There is a section heading: *Yesus Dibaptis Yohanes* .

TB follows the Greek of verses 9-11 closely. However like the TL before it, TB inserts the classifiers **'land of** Galilee' and **'river** Jordan'.

Verses 12-13 Another section heading introduces these verses: *Pencobaan di padang gurun*—'Temptation in the Desert". The TB follows the Greek (and TL) closely. The translation of ἐκβάλλει by 'led' *memimpin* is rather weak.

Verses 14-15 are introduced by the section heading *Yesus tampil di Galilea* —'Jesus appears in Galilee'.

The wording of the TB is not significantly different from TL except that *Waktunya telah genap* has replaced *Waktunya sudah sampai*. *Genap* means 'fulfilled' and so captures the force of πεπλήρωται much better.

Bahasa Indonesia Sehari-hari (1985)(BIS)

Format

The format of BIS follows that of GNB closely though the title is a little more fulsome: 'The Good News Which was Conveyed by Mark'—*Kabar Baik Yang Disampaikan oleh Markus.*

There is an Introduction and Outline of Contents which is a straight translation of that in the GNB. Some readers might well assume the Introduction is an integral part of the Gospel according to Mark.

The section headings are also identical with the seven headings of GNB except that verses 9-13, 'The Baptism and Temptation of Jesus' (GNB), is split in two in BIS as it had been in TB. The cross references printed under each section heading are those of the GNB.

Translation

In its translation of Mark 1:1-15 BIS is clearly based on GNB and deviates from it in less than a dozen instances.

Verses 1-3 A back translation of the first 3 verses gives us the text of the GNB except in v.2b where BIS has 'This is my messenger' says God, 'I am sending him ahead of you...' etc giving a stronger focus on τὸν ἄγγελον than GNB or any of the other versions.

Hence the restructuring of verses 1 and 2, the deferring of the translation of ἀρχή, the explanation 'Good News', the replacement of 'it is written' by 'God says', and of 'voice' by 'someone is shouting' etc are all reproduced in the new Indonesian version.

The use of *kata Allah* in the interpolated 'God says' is most uncomfortable even in modern Indonesian where the Islamic context and hierarchical social heritage means that mortals *berkata* but God *berfirman*.. This is a point of tension between the ST language which often does not distinguish God's pronouncements from those of humans (except in prophetic formulae) and the demand of naturalness in the RL. Ironically it is the DE version committed to naturalness that offends by not observing a deeply embedded Indonesian convention.

Verse 4 We have noted that the radical restructuring of this verse in the interest of clarity and explicitness as recommended by Nida in his workshops and manuals had

already found its way into TB. BIS builds even further on the GNB paraphrase of the Greek by further interpolations: the phrase 'As it is written' is inserted at the beginning. Then GNB's literal 'baptizing and preaching' is expanded by BIS to 'baptising people and conveying the news from God'. Finally 'thus said John' is added to the end of the verse.

BIS does introduce one improvement in v.4: instead of GNB's 'Turn away from your sins' it reinstates 'repent'—*bertobat* a word well known not only because of the influence of the earlier versions TL and TB, but again because of its use in Islam.

Verses 5-8 These verses follow GNB closely. But GNB itself is fairly conservative in its rendering of these verses.

BIS has one improvement—GNB's embarrassed 'many people...went out to hear John' is replaced by 'All people...went to hear John' as in the Greek.

Verse 9 Likewise GNB's rather free 'Not long afterwards' for ἐν ἐκείναις ταῖς ἡμέραις BIS improves on with its *Pada waktu itu* —'At that time'.

For some reason BIS opts for an unnatural active verb to render ἐβαπτίσθη. Indonesian always prefers the passive. It also supplies *sungai* 'river' before 'Jordan'.

Verses 10-11 BIS continues to follow GNB but replaces 'a voice came from heaven' with 'the voice of God said' (again using *kata* rather than *firman*) a gratuitous change.

Verses 12-13 BIS inserts *Allah* after *roh* 'spirit'—a defensible clarification in the Indonesian context. BIS's rendering of διηκόνουν by *melayani* 'served' is better than GNB's 'helped'.

Verses 14-15 Verse 14 is a straight translation of GNB including the reference to imprisonment. In verse 15 BIS goes a bit wild. It fails completely to render πεπλήρωται ὁ καιρός though the reading has overwhelming MSS support. It then replaces GNB's 'The kingdom of God is near' with 'God will immediately begin to reign'—*Allah segera akan mulai memerintah* an extraordinary rendering of ἤγγικεν ἡ βασιλεία τοῦ θεοῦ.

Summary

Our examination of the fate of Mark 1:1-15 in two dynamic equivalent translations, the English GNB and the Indonesian Alkitab BIS, has illustrated the outworking of two DE principles: the need for explicitness in translation and the priority of conveying the 'meaning' of the ST rather than its formal features.

Thus when we read in 1:14 that Jesus only begins his preaching ministry after the Baptist has been 'handed over' we are not surprised that GNB and BIS feel the need to explain that παραδίδωμι here means 'put into prison'. The DE approach certainly clarifies things by eliminating the ambivalence in the ST. But has it really conveyed the meaning? Why does Mark use an unqualified παραδίδωμι here? It could well be that this indeterminate expression has been used deliberately, for instance to underline the association between Jesus and John.

We have noted how the DE approach leads often to a drastic restructuring. Verse 4, so often quoted by Nida in his advocacy of explicitness and naturalness, receives radical expansion. In the ST there are 13 Greek words. To translate them the RSV uses 17 words, the TL 14, the TB 18, but the GNB uses 27.

As a matter of interest the Malay NT *Berita Baik Untuk Manusia Moden* (1976) differs from the Indonesian BIS in two respects. Firstly it distinguishes the speaking of God from that of man. Secondly it gives Jesus the title 'Rabbi' rather than *Tuhan* apparently out of sensitivity to the Islamic context. This leads to problems in Romans 10 where *Tuhan* is retained in the quote from Isaiah (v.13) but not in the required confession of faith in (v.9).

It might be supposed that in a Gospel narrative attention to the formal features of the ST is not as important as in more poetic sections of the Bible. Such a view is false. Modern commentators are increasingly aware of the deliberateness of the arrangement and vocabulary of Biblical narrative. Thus Mark 1:1-15 as a whole carefully sets the scene for the action which is to follow. For the participants Jesus is an enigma. But the readers are provided with a superscription in 1:1 that gives them the interpretative keys denied to the main players until very much later in the plot: 'The beginning of the Gospel of Jesus Christ Son of God'.

Thus, as Robert Fowler has pointed out, there is never any question of a 'Messianic Secret' for the reader of the gospel in which these opening verses provide the

cornerstone of irony in Mark.[11] These verses establish at the outset both the prophetic context and the eschatological orientation of all that follows. Not surprisingly they are heavy with allusive language. We have mentioned παραδίδωμι; ὀπίσω μου (1:7 cf 8:34) is another significant phrase. That John is a type of Elijah will later be made explicit for the narrative's characters but the linguistic allusions from 2 Kings 1:8 are already present in verse 6 for the reader's advantage.

In summary, to extract the 'message' from the forms in which it is embedded and to press it in natural English is not as easy as DE theory assumes. It often misses the intertextual connections which contribute to the meaning of the ST. We shall reflect later on the replication of the natural English renderings of the GNB in the Indonesian BIS.

---

11 R. Fowler, *'Loaves and Fishes': The Function of the Feeding Stories in the Gospel of Mark*', *SBLDS* 54 (Chico CA: Scholars Press, 1981) 159

TEXT 6 ROMANS 3:21-26

Introduction

The Epistle to the Romans is the Apostle Paul's most influential work. The body of the letter (1:16—15:13) is a compelling treatise on the 'gospel of God', for which he has been personally set apart. As the Jewish apostle, dramatically called to take to the Gentile world the message of the fulfilment of God's promises to Abraham in the person of Jesus the Messiah, Paul feels keenly all the tensions involved in 'to the Jew first, but also to the Greek' (Rom 1:16). This is the theme he addresses in Romans along with the questions concerning the righteousness and faithfulness of God, the future of Israel and the significance of the law.[12]

Paul's purpose in writing such a substantial exposition to a group of people that he did not in the main know has been a question of unending scholarly debate. However, the reasons that he indicates in his introduction (1:1-15) and conclusion (15:14ff) provide a sufficient general idea of his motivation. He is the apostle to the Gentiles. They come naturally under his umbrella. He is keen to expound his gospel to them. Not least, having completed his missionary task in the north eastern Mediterranean region, he seeks their support for his planned extension west to Spain. What better base could he look for than Rome itself?

Although Paul had no detailed knowledge of the situation in Rome, chapter 16 (assuming its authenticity) shows that the apostle had natural contacts with many households both Jewish and Gentile. The issues he addressed were real ones both within the Jewish community and among proselytes. Likewise the ethical teaching and guidelines for fellowship, found in chapters 12-15 reflected pastoral wisdom distilled from his experience of planting 'mixed' churches in other centres.

There is no doubt that 3:21-26 is a key passage in the letter: 'The importance of 3:21-26 within the broader argument of Paul's letter to the Romans is almost universally affirmed. The section has constantly attracted designations like 'thesis paragraph' because it stands at the heart of a sustained theological discourse.'[13]

---

12 See C.E.B. Cranfield, *A Critical and Exegetical Comentary on the Epistle to the Romans*, Vol.1 (ICC), (Edinburgh: T & T Clark, 1975), 199-218; J.D.G. Dunn, *Romans 1–8* (WBC), (Waco: Word Books, 1988), 163-218; J.A. Fitzmyer, *Romans: A New Translation with Introduction and Commentary* (Anchor Bible), (New York: Doubleday, 1992),341-53; E. Käsemann, *Commentary on Romans*, tr. and ed., G.W. Bromiley, (Grand Rapids: Wm.B. Eerdmans, 1980), 91-101.

13 D.A. Campbell, *The Rhetoric of Righteousness in Romans 3:21-26*, JSNT Supplement Series 65, (Sheffield: JSOT Press, 1992), 1.

GREEK TEXT

21 Νυνὶ δὲ χωρὶς νόμου δικαιοσύνη θεοῦ πεφανέρωται
μαρτυρουμένη ὑπὸ τοῦ νόμου καὶ τῶν προφητῶν, 22 δικαιοσύνη δὲ
θεοῦ διὰ πίστεως °'Ιησοῦ Χριστοῦ ‘εἰς πάντας’ τοὺς πιστεύοντας. οὐ
γάρ ἐστιν διαστολή, 23 πάντες γὰρ ἥμαρτον καὶ ὑστεροῦνται τῆς
δόξης τοῦ θεοῦ 24 δικαιούμενοι δωρεὰν τῇ αὐτοῦ χάριτι διὰ τῆς
ἀπολυτρώσεως τῆς ἐν Χριστῷ 'Ιησοῦ· 25 ὃν προέθετο ὁ θεὸς
ἱλαστήριον ‘διὰ [τῆς] πίστεως’ ἐν τῷ αὐτοῦ αἵματι εἰς ἔνδειξιν τῆς
δικαιοσύνης αὐτοῦ ‘διὰ τὴν πάρεσιν’ τῶν προγεγονότων
ἁμαρτημάτων 26 ἐν τῇ ἀνοχῇ τοῦ θεοῦ, πρὸς τὴν ἔνδειξιν τῆς
δικαιοσύνης αὐτοῦ ἐν τῷ νῦν καιρῷ, εἰς τὸ εἶναι αὐτὸν δίκαιον
°καὶ δικαιοῦντα τὸν ἐκ πίστεως r'Ιησοῦ.

The Greek Text

Romans 3:21-26 is a central passage in the development of Paul's argument about the righteousness of God. We are alerted to its significance by the re-emergence of two key terms from the statement of theme in 1:17 viz. δικαιοσύνη—3:21, 22, 25, 26; and πίστις—3:22, 25, 26, 27, 28, 30, 31. Yet this passage also echoes themes from the intervening chapters: the relation of God's righteousness to the Law (3:21 cf 2:12-29; 3:10-20), the impartiality of God's dealings with humanity (3:22 cf 2:6-11; 3:19), the universality of human sin (3:23 cf 3:9, 19) and the underlying exigence of the vindication of God seen in 3:1-9 is highlighted again in 3:25-26.

Thus what Paul now states about the saving work of Christ capitalizes on the cumulative effect of his treatment to 3:20.

The Greek text of Rom 3:21-26 has no major textual problems.

Verse 22 There is some meagre MSS support for ἐπὶ πάντας instead of εἰς πάντας. The Textus Receptus (1565-1611) actually combined the two readings following a later Western and Byzantine tradition, but the simple εἰς πάντας is probably the original reading.

Verse 25 Our text brackets the article in διὰ [τῆς] πίστεως reflecting variety in the MSS tradition. However, the article may well be original as it is later in verses 30 and 31. It would also function here as a back reference to διὰ πίστεως 'Ιησοῦ Χριστοῦ in verse 22.

Verse 26 Some MSS add Χριστῷ after Ιησοῦ. This could be a natural scribal addition.

THE ENGLISH VERSIONS

RSV 1952

21But now the righteousness of God has been manifested apart from law, although the law and the prophets bear witness to it, 22the righteousness of God through faith in Jesus Christ for all who believe. For there is no distinction; 23since all have sinned and fall short of the glory of God, 24they are justified by his grace as a gift, through the redemption which is in Christ Jesus, 25whom God put forward as an expiation by his blood, to be received by faith. This was to show God's righteousness, because in his divine forbearance he had passed over former sins; 26it was to prove at the present time that he himself is righteous and that he justifies him who has faith in Jesus.

GNB 1976

How God Puts Us Right with Him

21 But now God's way of putting people right with himself has been revealed. It has nothing to do with law, even though the Law of Moses and the prophets gave their witness to it. 22God puts people right through their faith in Jesus Christ. God does this to all who believe in Christ, because there is no difference at all: 23everyone has sinned and is far away from God's saving presence. 24But by the free gift of God's grace all are put right with him through Christ Jesus, who sets them free. 25-26God offered him, so that by his death he should become the means by which people's sins are forgiven through their faith in him. God did this in order to demonstrate that he is righteous. In the past he was patient and overlooked people's sins; but in the present time he deals with their sins, in order to demonstrate his righteousness. In this way God shows that he himself is righteous and that he puts right everyone who believes in Jesus.

The Revised Standard Version (1952)(RSV)

The interpreter of Romans 3:21-26 is faced with a series of difficult lexical, grammatical, discourse and theological decisions.

Lexically the RSV translates concordantly a number of key terms whose precise meaning continues to be a matter of dispute among commentators: δικαιοσύνη,

δικαιόω, ἀπολύτρωσις, ἱλαστήριον, αἷμα, δόξα, πίστις, νόμος. This means that it tends to carry over into English some of the ambiguities, obscurities and probably meaning potential of the ST.

Grammatical questions concern the precise relationship of the words in the two genitive form phrases, δικαιοσύνη θεοῦ in verses 21 and 22 and πίστεως Ἰησοῦ Χριστοῦ in v. 22 and v.26. It is not immediately clear whether the force of the genitives is subjective, objective, or both, or something else. In the former RSV simply reproduces 'the righteousness of God'. Its rendering 'faith in Jesus Christ' clearly opts for an objective understanding of the genitive.

At the syntactic and discourse level RSV preserves the transition in Paul's argument signalled by the initial νυνὶ δὲ (v.21) while retaining the link with v. 20 revealed in the repeated negative—positive reference to law:

v.20 righteous not by the works of the law...
through the law knowledge of sin

v.21 righteous apart from the law...but
witnessed to by the law

Verses 22-26 The relationship between successive phrases and clauses is not always obvious. Whereas these were simply translated literally in the KJV, the RSV seeks to make the passage more manageable in English by replacing a participle by a verb in v.24 'they are justified', by commencing a new sentence in v.25 'this was to show God's righteousness...', and by replacing a prepositional phrase with a full clause in v.26!

In its restructuring of v.25 the RSV does lose the third of a threefold epanaphora, preserved in the KJV, and so arguably obscures the structure of this key passage.[14] It could be represented as follows:

But now the righteousness of God has been revealed
through the faithfulness of Christ
(for everyone who believes...);
through the redemption that is in Christ Jesus
(whom God purposed as a ἱλαστήριον);
through (the) faith(fulness) in his blood.

---

14 D.A. Campbell, *The Rhetoric of Righteousness in Romans 3:21-26*, (Sheffield; *JSOT* 65, 1992) 95

The Good News Bible (1976)(GNB)

We shall again print the RSV and GNB alongside each other verse by verse to better note the distinctive qualities of the GNB.

	GNB	RSV
3:21	But now God's way of putting people right with himself has been revealed. It has nothing to do with law, even though the Law of Moses and the prophets gave their witness to it.	But now the righteousness of God has been manifested apart from law, although the law and the prophets bear witness to it,

The GNB breaks the verse into two sentences, paraphrases 'righteousness of God' and 'apart from law', and inserts 'of Moses' after 'Law' (capitalized). Hence this verse in the GNB has 34 over against the RSV's 22 words.

δικαιοσύνη θεοῦ: Exegetes have provided various interpretations of this key phrase (cf. 1:17):

e.g. (a) 'the righteous standing that God gives'
(b) 'the righteous character of God'
(c) 'the righteous activity that comes from God'[15]

GNB cuts the Gordian knot and apparently opts for (c) 'God's way of putting men right with himself'. NB: the 1979 edition changed 'men' (the supplied object) to a less sexist 'people'.

χωρὶς νόμου is rendered rather freely 'It has nothing to do with law'. This together with its deferred appearance in the translation distorts the antithesis of the two νόμος phrases in this verse which as we have seen link it with the parallel antithesis in verse 20.

The interpolation 'of Moses' after 'law' is gratuitous. The phrase 'law of Moses', though rare in Paul, is common in the Gospels (and in the Apocryphal writings).

GNB, however, like RSV, retains the 'witness' of the law and the Prophets cf the imagery of the law court in verses 19-20.

---

15 See C E B Cranfield, *A Critical and Exegetical Commentary on the Epistle to the Romans*, Vol.I, (Edinburgh: T&T Clark, 1975) 91f.

	GNB	RSV
3:22	God puts people right through their faith in Jesus Christ. God does this to all who believe in Christ, because there is no difference at all:	the righteousness of God through faith in Jesus Christ for all who believe. For there is no distinction;

The repetition of δικαιοσύνη δὲ θεοῦ anticipates a further explanation of the phrase. The addition of δε underlines this (cf. 9:30; 1 Cor 2:6). The GNB rendering again supplies a verb and an object to make explicit its interpretation. Like the RSV (but not KJV) the GNB also clarifies that the genitive is objective: 'through faith in Jesus Christ.' The ST διὰ πίστεως Ιησοῦ Χριστοῦ is in fact ambiguous. The genitive could be subjective, or possessive or even generally descriptive (e.g. 'Christian faith').[16]

Which grammatical interpretation we choose is also influenced by our understanding of the meaning of the noun πίστις. Does the sense of the noun correspond to that of the active and intransitive forms of the verb πιστεύω ('I believe', 'trust') or does it mean 'faithfulness', 'reliability', 'firmness'?

Inevitably one's theological understanding of Paul's total argument will also be significant. Is the apostle focussing here on the work of Christ, or the human response, or both as G. Herbert, K. Barth and T. Torrance have maintained?[17]

It is not my purpose to argue here concerning the general thrust of Paul's usages of πίστις Χριστοῦ, but on the basis of comparison of the eight main occurrences (Gal 2:16, 20; 3:22; Rom 3:22, 26; Phil 3:9; and Ephes 3:12) and of Paul's immediate thesis in Romans, a subjective understanding is plausible. Furthermore, the term πίστις in the LXX and extra Biblical Greek seems to have the sense of 'reliability', 'faithfulness' or 'pledge' (rather than 'faith' or 'trust'), a reading which commends itself in other parts of the NT (e.g. the many occurrences in 1 and 2 Thessalonians; cf Mark 11:22, James 2:1; Rev 2:13; 14:12; Phil 3:9; Ephes 3:11).

In the immediate context of Rom 3:21-26 a non-objective understanding of πίστις Χριστοῦ is surely a live option. The chapter has begun with an assertion of the πίστις θεοῦ over against the unfaithfulness of His people. Then, in the midst of that divine operation whereby 'the righteousness of God' is brought to bear for guilty Jews

---

16 An excellent survey of the options and their implications is found in D.A. Campbell, *The Rhetoric of Righteousness in Romans 3:21-26*, (Sheffield: JSOT Press, 1992), 62-69.

17 The argument is taken up by G. Howard, 'Romans 3:21-31 and the Inclusion of the Gentiles', *HTR* 163 (1970) 228-31.

and Greeks, the faithfulness of Jesus Christ has been manifested to those who believe. Christ's faithfulness to death itself makes possible an atoning sacrifice that redeems lost men and women. This is God's way of righting wrong.

'to all who believe in Christ' GNB supplies an object v.12 'in Christ' to what was probably a standard self designation of the first disciples.

The emphatic use of πάντας balances the repeated 'all/every' in verses 19-20 and 23.

Verses 23-26 in the Greek are one sentence. GNB breaks it up into six sentences.

	GNB	RSV
3:23	everyone has sinned and is far away from God's saving presence.	since all have sinned and fall short of the glory of God,

GNB's 'Everyone has sinned' is unfortunate in that πάντες—'all'—links this statement with the 'alls' in 3:4, 9, 12, 19, 20.

Likewise 'is far away from God's saving presence' obliterates the δόξα motif in Romans (cf 1:23 and 8:18-21). The allusion is to Adam's fall which resulted in his forfeiting the glory of God. Commentators have drawn attention to a tradition of Jewish reflection on Adam's loss of the glory of God and its eventual restoration, reflected in the intertestamental writings.[18]

	GNB	RSV
3:24	But by the free gift of God's grace all are put right with him through Christ Jesus, who sets them free.	they are justified by his grace as a gift, through the redemption which is in Christ Jesus,

GNB renders verse 24 by a complete restructured sentence. The passive participle of dikaiovw is rendered 'all are put right'. 'All' is interpolated as is 'God's.'

The verb has already appeared three times (at 2:13; 3:4, 20) while its related noun form has appeared four times (1:17; 3:5, 21, 22). We can assume a law court analogy.

'through the redemption which is in Christ Jesus' (RSV) has become 'through Christ Jesus who sets them free'.

The traditional salvation term 'redemption' is thus replaced by a verbal construction. This is regrettable in that while the sense of 'emancipation' or 'liberation' may be

---

18 J. Dunn, *Romans 1-8*, (Dallas: Word Books, 1988) 168

uppermost, one could not rule out the component of 'ransom' found in contemporary usage particularly in view of Paul's teaching elsewhere about believers being bought with a price (cf 1 Cor 6:20; 7:23; Gal 3:13; 4:5) as well as other NT references (Mk 10:45; Mat 20:28; Act 20:28; 1 Tim 2:6; 1 Pet 1:18f; 2 Peter 2:1; and Rev 5:9). It is highly likely, too, from the use of λυτροῦν vocabulary in the LXX that the OT motif of God as Israel's redeemer from Egyptian slavery also lies behind Paul's usage.[19]

	GNB	RSV
3:25-26	God offered him, so that by his death he should become the means by which people's sins are forgiven through their faith in him. God did this in order to demonstrate that he is righteous. In the past he was patient and overlooked people's sins; but in the present time he deals with their sins, in order to demonstrate his righteousness. In this way God shows that he himself is righteous and that he puts right everyone who believes in Jesus.	whom God put forward as an expiation by his blood, to be received by faith. This was to show God's righteousness, because in his divine forbearance he had passed over former sins; 26it was to prove at the present time that he himself is righteous and that he justifies him who has faith in Jesus.

The GNB rendering of Paul's sacrificial terminology in ὃν προέθετο ὁ θεὸς ἱλαστήριον διὰ πίστεως ἐν τῷ αὐτοῦ αἵματι is unsatisfactory.

The verb probably should be translated 'set forth' rather than 'intended' (*pace* Cranfield[20]). The public nature of Christ's shameful execution is reflected in Acts 5:30; 10:39; Gal 3:1. This is in contrast with the private manipulation of blood in the Holy of Holies on the Day of Atonement.

ἱλαστήριον is almost exclusively an LXX word, used 21 times in Exodus, Leviticus and Numbers for the lid of the ark of the covenant, 'the mercy seat'. It is used here metaphorically. Traditionally it has been translated 'propitiation' or 'expiation'. Paul's exposition to this point implies a turning aside of God's wrath. But the passage presents God as the offerer rather than the beneficiary of the sacrifice.

By deciding to paraphrase the metaphor GNB reduces the shock value of the expression and severs the connection with the Temple cultus. Likewise the replacement of 'blood' by 'death' removes the association of 'the blood of sacrifice'

---

19 See C.E.B. Cranfield, *A Critical and Exegetical Commentary on the Epistle to the Romans*, Vol.I (ICC) (Edinburgh: T&T Clark, 1975, 206-7; J.D.G. Dunn, *Romans 1–8* (WBC) (Waco: Word Books, 1988) 169; J.A. Fitzmyer, *Romans* (Anchor Bible) (New York: Doubleday, 1992) 348.

20 C.E.B. Cranfield, *Romans* Vol 1 (ICC) (T &T Clark: Edinburgh, 1975) 209

which Paul's readers would have known was the crucial part of the ritual, not least in the Day of Atonement sin offering (Lev 16 cf Heb 9:11-14; 1 Pet 1:19; Mark 14:24).

διὰ πίστεως GNB renders 'through their faith in him'. But as argued above it is more likely that pivsti" refers to Christ's faithfulness in death. How can human faith demonstrate God's righteousness? This interpretation also obviates the need to separate pivsti" from 'in his blood' which modern commentators feel compelled to do.

εἰς ἔνδειξιν τῆς δικαιοσύνης αὐτοῦ The RSV's 'This was to show his righteousness' is preferable because it does not lock up the reader to one interpretation e.g. 'God's own righteousness' (so GNB) or the alternate 'righteous status given by God'.

GNB fails to note the significance of the structure of verses 25c-26c in the Greek.

It is helpful to have these two parallel purpose constructions set out

εἰς ἔνδειξιν τῆς δικαιοσύνης αὐτοῦ
διὰ τὴν πάρεσιν τῶν προγεγονότων ἁμαρτημάτων
ἐν τῇ ἀνοχῇ τοῦ θεοῦ
πρὸς τὴν ἔνδειξιν τῆς δικαιοσύνης αὐτοῦ
ἐν τῷ νῦν καιρῷ.

Actually GNB does twice reproduce 'in order to demonstrate…' but translates the two following uses of δικαιοσύνη θεοῦ differently.

GNB restructures verses 25 and 26 in the interests of natural English. Thus following on the RSV 'God…was patient' is brought forward from verse 26 and 'he deals with men's sins' is interpolated into verse 26 'as a transitional device to make explicit the relation between the last part of verse 25 and the first part of verse 26'.[21]

Nida does not like latinate vocabulary, so in verse 26c 'just' and 'justifier' are replaced by 'righteous' and 'puts right' which is a fair exchange, and in fact superior to the RSV's mixed rendering 'righteous' and 'justifies'.

In translating τὸν ἐκ πίστεως Ἰησοῦ GNB makes even more explicit RSV's earlier interpretation by rendering this 'everyone who believes in Jesus'. Why did Paul not spell this out if this were his intent? Again I believe the 'faith(fulness)' referred to is that of Jesus and that a subjective genitive best fits the context.

---

21 B. Newman and E.A. Nida, *A Translators Handbook on Paul's Letter to the Romans*, (Stuttgart: UBS, 1973) 69.

Summary

As is common in NT teaching passages, the GNB's tendency to paraphrase results in a more verbose rendering of Romans 3:21-26 (174 words against RSV's 121 words).

We are reminded that 'dynamic equivalence' implies more than just contemporary, vernacular language. In practice DE requires that where a word or phrase in the ST may be open to several meanings of nuances one should be chosen and made explicit. An FC translation on the other hand will often retain in the RL the ambivalence of the ST.

In this, our sixth text, we noted that the GNB has followed lines of interpretation already suggested in the RSV but with less concern to preserve ST forms. The most significant result is the dissipation of ST motifs, e.g. δικαιοσύνη θεοῦ, δόξα as well as terminology from the Jewish sacrificial cultus such as ἀπολύτρωσις, ἱλαστήριον and αἷμα.

GNB also followed RSV in interpreting πίστις followed by the genitive to mean 'faith in'. I have suggested that this is both contrary to normal usage and to the argument of Paul in Romans 3:21-26. It is worth reminding ourselves that different languages put different grids on reality. Thus where in English we see a clear meaning distinction between 'belief' on the one hand and 'fidelity' on the other, it could be that for a Greek speaker πίστις covered both or perhaps represented a *tertium quid*—some sense of 'fixity' or 'firmness' which was suitable for a variety of contexts.

TL 1938/1952

21Tetapi sekarang dengan tiada bertorat sudah dinjatakan kebenaran Allah, jang disaksikan oleh Torat dan nabi-nabi, (*Kis. 10:43*) 22jaitu kebenaran Allah oleh sebab iman kepada Jésus Keristus untuk sekalian orang jang pertjaja; karena tiada perbedaan, 23sebab sekaliannja sudah berbuat dosa dan kurang kemuliaan daripada Allah, (*aj. 9, 19.*) 24serta dibenarkan tjara karunia sahadja, dengan anugerah Allah, oleh sebab penebusan jang ada didalam Jésus Keristus, (*fs 5:1; Epes. 2:8*) 25Jang dihadapan Allah mendjadi pendamai dengan djalan iman kepada darahnja, akan menundjukkan kebenarannja, sebab dibiarkannja segala dosa jang teradahulu didalam masa pandjang sabar Allah, (*Iman. 16:12-15; Ibr. 4:16.*) 26akan menundjukkan kebenarannja itu pada masa ini, bahwa Ia sendiri ada adil, dan Ia membenarkan pula orang jang menaruh iman kepada Jésus.

TB 1974

Manusia dibenarkan karena iman 3:21-31

21Tetapi sekarang, tanpa hukum Taurat kebenaran Allah telah dinyatakan, seperti yang disaksikan dalam Kitab Taurat dan Kitab-Kitab para nabi, 22yaitu kebenaran Allah karena iman dalam Yesus Kristus bagi semua orang yang percaya, Sebab tidak ada perbedaan. 23Karena semua orang telah berbuat dosa dan telah kehilangan kemuliaan Allah, 24dan oleh kasih karunia telah dibenarkan dengan cuma-cuma karena penebusan dalam Kristus Yesus. 25Kristus Yesus telah ditentukan Allah menjadi jalan pendamaiam karena iman, dalam darahNya. Hal ini dibuatNya untuk menunjukkan keadilanNya, karena Ia telah membiarkan dosa-dosa yang telah terjadi dahulu pada masa kesabaranNya. 26MaksudNya ialah untuk menunjukkan keadilanNya pada masa ini, supaya nyata, bahwa Ia benar dan juga membenarkan orang yang percaya kepada Yesus.

BIS 1985

Bagaimana Allah memungkinkan manusia berbaik dengan dia

21Tetapi sekarang Allah sudah menunjukkan jalan bagaimana manusia berbaik dengan dia; dan caranya itu tidak ada sangkut pautnya dengan hukum agama Yahudi. Buku-buku Musa dan buku-buku nabi-nabi justru menyatakan hal itu, 22bahwa Allah memungkinkan manusia berbaik dengan dia, hanya kalau manusia percaya kepada Yesus Kristus. Allah berbuat ini untuk semua orang yang percaya kepada Kristus; sebab tidak ada perbedaannya: 23Semua orang sudah berdosa dan jauh dari Allah yang hendak menyelamatkan mereka. 24Hanya karena rahmat Allah saja yang diberikan dangan cuma-cuma, hubungan manusia dengan Allah menjadi baik kembali; caranya ialah: manusia dibebaskan oleh Kristus Yesus. 25Allah mengurbankan Kristus Yesus supaya dengan kematiannya itu manusia dinyatakan bebas dari kesalahan kalau mereka percaya kepadanya. Allah berbuat begitu untuk menunjukkan keadilannya. Sebab pada masa yang lampau Allah sudah berlaku sabar terhadap dosa-dosa manusia, sehingga ia tidak menghukum mereka. 26Tetapi sekarang ia bertindak terhadap dosa

untuk membuktikan keadilannya. Dengan cara itu ia menunjukkan bahwa dirinya benar; dan setiap orang yang percaya kepada Yesus, dinyatakannya sebagai orang yang sudah berbaik kembali dengan Allah.

Alkitab Terjemahan Lama (1938/1952)(TL)

It is always of interest to read the TL because it often preserves Dutch traditions of exegesis not espoused in the British or American schools.

The sub-title given to our passage reads 'God Reveals His Righteousness Because of Faith' *Allah menyatakan kebenarannja oleh sebab imam* . The 'because' comes as a surprise in a translation emanating from the Reformed tradition!

TL is a similar translation to the RSV. It preserves key motifs and terminology from the ST, e.g. *kebenaran Allah* 'righteousness of God', *kemuliaan* 'glory', *penebusan* 'redemption', *torat* 'law', *darah* 'blood'.

Three differences from the RSV are found in verse 25:

a) Instead of 'whom God put forward' we find 'whom in the presence of God'—*Jang dihadapan Allah* ...

b) Instead of 'as an expiation' TL has 'became a peacemaker'—*mendjadi pendamai*

c) Instead of RSV's rather free 'by his blood, to be received by faith' TL has 'by the way of faith in his blood'—*dengan djalan iman kepada darahnya* , which preserves the order of the Greek.

With regard to Paul's general play on the δικαιο- word group, this is faithfully reproduced in the Malay-Indonesian TL. The adjective used is *benar*, the noun *kebenaran*, the verb *membenarkan*. The only exception to this concordant translation of the Greek word group in the TL is in verse 26 where the adjective δίκαιος is rendered by *adil* 'just' rather than *benar* which more usually means 'true' than 'just'.

Alkitab Terjemahan Baru (1976)(TB)

The sub-title is almost as strange as that of TL 'Mankind is justified **because** of faith'—*Manusia dibenarkan karena imam.* The 'because of faith' is repeated in verse 22.

The language of TB is typically more free flowing and contemporary. Key motifs and terms are retained as in TL and the same renderings of these are used as in TL. With regard to the translation of the δικαιο- word group there are some changes: *benar*

replaces *adil* in verse 26 to restore the word play of the Greek lost in TL, but, then strangely *adil* unexpectedly replaces *benar* in the noun form (v.12 *keadilan*) in verses 25 and 26a.

Verse 25 is now broken up into 2 sentences.

The first now reads 'Christ Jesus has been appointed by God to become the way of peace/reconciliation because of faith, in his blood' which follows the Greek order but removes the connection between 'faith' and 'in his blood'. The 'because of faith' did attract some criticism when TB was published but, as we have seen, the tradition was already in TL.

Both TB and TL like RSV promoted 'in God's forbearance' from the beginning of verse 26 to the end of verse 25.

TB provides the classifier *kitab* 'book' and its plural before both 'the Law' and 'the prophets'.

Alkitab Kabar Baik Bahasa Indonesia Sehari-hari (1977/1985)(BIS)

The title is a virtual translation of that in GNB (and preferable to that of TL and TB!) 'How God puts mankind right with Him'.

We are immediately aware of the DE tendency to expand and explain didactic passages. TL had 106 words, TB 113 words, but BIS takes 173 words to render the 99 Greek words in the ST.

Following the example of GNB, BIS paraphrases key terms δικαιοσύνη θεοῦ, δόξα and even νόμος (which GNB retained), as well as eliminating the sacrificial figures in verse 25: ἀπολύτρωσις, ἱλαστήριον, αἷμα are all paraphrased.

In fact BIS is more free than GNB. The 'law' in verse 21 becomes 'laws of the Jewish religion'. TB had inserted the classifier *kitab* before 'the law' and 'the prophets'. This is now replaced in BIS with 'books of Moses and books of the prophets'. The play on 'law' disappears and the classifier *buku* is irreverent in an Islamic society.

BIS reads as a translation of GNB rather than of the ST, with occasional independent flourishes such as the interpolation at the end of verse 25 'such that he did not punish them' in addition to the GNB's interpolation at the beginning of verse 26 'But in the

present time he deals with their sins' which BIS faithfully reproduces! On checking the UBS *Translators Handbook on Romans* one finds that the translator is urged to put such explanations into the translation of verses 26 and 27 to make clear that 'God is concerned with men's sins'.[22]

Summary

We see once again the remarkable influence of Nida and the GNB on the Indonesian DE version BIS such that the observations made above on GNB are again apt for BIS. The striking feature of this modern Indonesian translation, however, is that it is more influenced by its Western model (GNB) than by sensitivity to the Indonesian context. Thus the disappearance of sacrificial terminology in Romans 3:25 along with other terms (not least δόξα and νόμος) fails to recognize not only their centrality in the ST but also their naturalness in the Indonesian context where the Islamic religious milieu takes for granted familiarity with animal sacrifice, 'law', and the concept of 'glory'.

22 B. Newman and E.A. Nida, *A Translators Handbook on Paul's Letter to the Romans*, (Stuttgart: UBS, 1973) 69

TEXT 7 REVELATION 20

Introduction: The Genre Of Revelation

The past century has seen the emergence of a bewildering variety of critical tools for Biblical scholarship: form and redaction criticism, canon criticism, social scientific analysis, lexical semantics, literary criticism etc. One of the more recent and important disciplines is genre criticism.

From one point of view genre criticism is hardly new. From the earliest centuries readers of the NT have recognized that it comprises four different types of books which cannot be approached in identical ways: the Gospels, the Acts of the Apostles, the Letters and Revelation. Only recently, however, has there been self-conscious reflection on the literary character of the different Scripture genres and their relationship to similar non-canonical works within their Jewish or Greco-Roman contexts.[1]

Thus there are no other biographies quite like the Gospels. Yet Luke 1:1-14 alerts us to links with contemporary Greco-Roman histories. With regard to the Epistles Adolf Deissmann's study of Egyptian papyri and his twofold classification of 'real' and 'non-real' letters stimulated subsequent studies which tended to analyze the Letters functionally or rhetorically.

Revelation is a work that calls out for genre criticism. Formally it shares the features of prophecy, apocalyptic and letter.

Traditionally the book has been primarily studied as prophecy with fiercely different schools of interpretation emerging along temporal (preterist, historicist, idealist and futurist) and millennial (premillennial, amillennial) lines. This prophetic approach has often encouraged the reading of the Apocalypse in terms of current events down through the centuries. Hal Lindsey's best-selling book *The Late Great Planet Earth* [2] published in the 1970s is a salutary recent example. The imagery of Revelation is of such an archetypal nature as to fit well with world events in many eras.[3]

Despite the unique place that Revelation occupies in the Canon of Scripture this does not mean that it is without literary counterparts from which helpful insights can be

---

1 See D.E. Aune, *The New Testament in its Literary Environment*, (Philadelphia: Westminster, 1987).

2 H. Lindsey with C.C. Carlson, *The Late Great Planet Earth;* (Grand Rapids: Zondervan 1970 & Melbourne: S John Bacon, 1972)

3 On archetype in Revelation see N. Frye, *The Great Code: The Bible and Literature*, (San Diego: Harcourt, Brace and Jovanovich, 1983).

derived. Within the first five verses of his prologue John provides three different categories to describe his work. Ἀποκάλυψις—'revelation' is the first word John writes and 'apocalyptic' has become the term most commonly used to describe the class of writings with which it is seen to be related. In verse 3 John goes on to describe his work as a 'prophecy'. Then in verse 4 (cf. v.11) he proceeds as though he is composing a letter that is intended to be read in church like those of the Apostle Paul. The subsequent letters to the seven churches in chapters 2-3 and the conclusion (22:6ff cf Col 4:16) underline this purpose. Before the NT writers we find that the letter had become established in Greek literature as a form of instruction used by philosophers, moralists, physicians etc. It is not surprising therefore that the Apostle Paul and the other NT writers adopted this convention to their own purposes.

To call the Revelation of John 'apocalyptic' is strictly speaking tautologous, but it is a convenient way of stressing that the composition is not completely *sui generis*. There is in fact a genre of revelatory literature, particularly Jewish literature such as Daniel 7-12, 4 Ezra, 2 Baruch, the Apocalypse of Peter, and the Apocalypse of John the Theologian.

In the Old Testament, prophecy addressed the historical covenant relationship between God and Israel which was breached or maintained within history and whose fulfilment was envisaged in strictly historical terms. But the apocalyptic movement, emerging from a prophetic matrix, fed on the pessimistic conditions in the immediate post exilic period, displaying an increasing indifference to the historical arena as the place from which divine action would come. Coupled with this extra mundane preoccupation, one finds increasing use of myth, particularly ancient Near East creation myths to focus on the principalities and powers in heavenly places.[4] Recent studies have concentrated on the social function of Revelation.[5]

However, it is imperative that the *Revelation of John* not be forced to conform to some arbitrary construct drawn up on the basis of a diverse group of writings. As Leon Morris has pointed out, Revelation differs from 'typical apocalypses' in that a) it frequently refers to itself as a prophecy b) includes prophetic calls for repentance c) is not pseudonymous d) is pervaded by optimism e) does not retrace past history in the guise of prophecy f) has a realized eschatology g) has little angelic interpretation and h) affirms that the Messiah has already come and made atonement.[6]

---

4 cf W.J. Dumbrell, 'Daniel 7 and the Function of OT Apocalyptic', *RTR* 34 (1975), 16-23.
5 e.g. 'Early Christian Apocalypticism: General Social Setting', *Semeia* 36 (1986).
6 L. Morris, *The Book of Revelation*, (Leicester: IVP; Grand Rapids: Eerdmans 1987) 25-27.

Our interpretation of Revelation must not be primarily determined by external factors (e.g. Greek drama, imperial games, paschal liturgy) but by the inner structure of the book. Having asserted the preeminence of the formal features of the book, however, one must quickly admit that no scholarly consensus has been reached.

On the one hand there are those who expound the septenary or seven-fold structure. Thus A.Y. Collins provides the following outline.[7]

1. Prologue 1:1-8
2. The seven messages 1:9-3:22
3. The seven seals 4:1-8:5
4. The seven trumpets 8:2-11:19
5. Seven unnumbered visions 12:1-15:4
6. The seven bowls 15:5-16:21

   Babylon appendix 17:1-19:10
7. Seven unnumbered visions 19:11-21:8

   Jerusalem appendix 21:9-22:5
8. Epilogue 22:6-21

On the other hand Schussler-Fiorenza detects a chiastic structure:[8]

A Prologue 1:1-8
B Inaugural vision and letter septet 1:9-3:22
C Seven-sealed scroll vision 4:1-9:21; 11:15-19
D Small prophetic scroll 10:1-15:4
C' Seven-sealed scroll vision, continued 14:1,5-19:10
B' Visions of judgement and salvation 19:11-22:9
A' Epilogue 22:10-22:21.

The interpreter of Revelation does face a hermeneutical minefield. But commonsense reminds us that the book would have been intelligible to its original addressees. Beasley-Murray likens the writer to a modern political cartoonist.[9] For us, many of the creatures and situations sound grotesque. But just as the modern cartoonists might use the Russian bear, the Chinese dragon and the British lion, so the original readers of Revelation would have recognized the symbols and caricatures that portrayed the

---

7 A.Y. Collins, *The Combat Myth in the Book of Revelation*, Harvard Dissertation in Religion 9 (Missoula: Scholars Press, 1976).

8 E. Schussler-Fiorenza, *The Book of Revelation: Justice and Judgement*, (Philadelphia: Fortress Press, 1985) 175-176

9 G.R. Beasley-Murray, *The Book of Revelation* (NCB) (London: Oliphants, 1974) 17.

contemporary political forces and spiritual powers, just as the readers of Daniel 7 would have recognized the monsters that emerge from the sea as variants of Tiamat the sea monster that defied heaven. So John makes free use of conventional material both prophetic and apocalyptic.

As the vision of the Lord in chapter 1 introduces the seven letters, so the vision of God and the Lamb in chapters 4-5 introduces the main body of the book occupying a crucial position in its structure and the key to its theology. There follows a sequence of events that lead to the unveiling of the final kingdom (chapters 6-19). It is probable that the three sequences of messianic judgements portrayed in the symbolism of seals, trumpets and cups of wrath are to be understood as parallel and alternative descriptions rather than a chronological series of events leading to the parousia.[10]

The only other comment to be made on the structure of the book is the repetition of the phrase 'in the Spirit'. Each of the four occurrences of this stock phrase is in a context where a heavenly intermediary enters the narrative. On each occasion the prophet is in a different place:

1:10-11	on Patmos
4:1-2	in heaven
17:1-3	in a wilderness
21:9-10	on a great, high mountain

Revelation Chapter 20[11]

The choice of this chapter in Revelation was arbitrary. I am aware that 'it has been the paradise of cranks and fanatics on the one hand and literalists on the other'.[12] I am not aware of any treatment of it in *The Bible Translator* or other UBS publications.

GREEK TEXT

20 Καὶ εἶδον ᵀ ἄγγελον καταβαίνοντα ᴮ ἐκ τοῦ οὐρανοῦ᾽ ἔχοντα
τὴν κλεῖν τῆς ἀβύσσου καὶ ἅλυσιν μεγάλην ᾽ἐπὶ τὴν χεῖρα᾽ αὐτοῦ.
2 καὶ ἐκράτησεν τὸν δράκοντα, ᾽ὁ ὄφις ὁ ἀρχαῖος᾽, ᶜὅς ἐστιν ᵀ
Διάβολος καὶ ᴰὁ Σατανᾶς ᵀ, καὶ ἔδησεν αὐτὸν χίλια ἔτη 3 καὶ

---

10 G.R. Beasley-Murray, *The Book of Revelation*, (London: Oliphants, 1974) 30-32.

11 Helpful treatments of this chapter include G.R. Beasley-Murray, *The Book of Revelation*, (London: Oliphants, 1974) 284-304; G.B. Caird, *The Revelation of St John the Divine*, (London: A.&C. Black, 1966) 249-60; R.H. Mounce, *The Book of Revelation* (NICNT) (Grand Rapids: Wm.B. Eerdmans, 1977) 351-67.

12 G.B. Caird, *The Revelation of St John the Divine*, (London: A. & C. Black, 1966) 249

ἔβαλεν αὐτὸν εἰς τὴν ἄβυσσον καὶ ⌜ ἔκλεισεν καὶ ἐσφράγισεν ἐπάνω αὐτοῦ, ἵνα μὴ ⌜ πλανήσῃ ° ἔτι τὰ ἔθνη ἄχρι τελεσθῇ °1 τὰ χίλια ἔτη. ᵀ μετὰ ταῦτα δεῖ ˢ λυθῆναι αὐτὸν ᶻ μικρὸν χρόνον. 4 Καὶ εἶδον θρόνους καὶ ἐκάθισαν ἐπ᾽ αὐτοὺς καὶ κρίμα ἐδόθη αὐτοῖς, καὶ ᵀ τὰς ψυχὰς τῶν πεπελεκισμένων διὰ τὴν μαρτυρίαν Ἰησοῦ καὶ διὰ τὸν λόγον τοῦ θεοῦ καὶ οἵτινες οὐ προσεκύνησαν τὸ θηρίον ⌜οὐδὲ τὴν εἰκόνα αὐτοῦ καὶ οὐκ ἔλαβον τὸ χάραγμα ἐπὶ τὸ μέτωπον ᵀκαὶ ἐπὶ τὴν χεῖρα αὐτῶν. καὶ ἔζησαν καὶ ἐβασίλευσαν μετὰ °τοῦ Χριστοῦ ᵀ¹ χίλια ἔτη. 5ᵅᵀ οἱ λοιποὶ τῶν νεκρῶν οὐκ ἔζησαν ἄχρι τελεσθῇ τὰ χίλια ἔτη. ᾽ Αὕτη ἡ ἀνάστασις ἡ πρώτη. 6 μακάριος καὶ ἅγιος ὁ ἔχων μέρος ἐν τῇ ἀναστάσει τῇ πρώτῃ. ἐπὶ τούτων ὁ ‘δεύτερος θάνατος’ οὐκ ἔχει ἐξουσίαν, ἀλλ᾽ ἔσονται ἱερεῖς τοῦ θεοῦ καὶ τοῦ Χριστοῦ καὶ βασιλεύσουσιν ‘μετ᾽ αὐτοῦ’ °[τὰ] χίλια ἔτη. 7Καὶ ‘ὅταν τελεσθῇ’ τὰ χίλια ἔτη, λυθήσεται ὁ σατανᾶς ἐκ τῆς φυλακῆς αὐτοῦ 8 καὶ ἐξελεύσεται πλανῆσαι ᵀτὰ ἔθνη °τὰ ἐν ταῖς τέσσαρσιν γωνίαις ᵅτῆς γῆς, τὸν᾽ Γὼγ καὶ ᵀ Μαγώγ, ᵀ¹ συναγαγεῖν αὐτοὺς εἰς °¹ τὸν πόλεμον, ὧν ὁ ἀριθμὸς °² αὐτῶν ὡς ἡ ἄμμος τῆς θαλάσσης. 9 καὶ ἀνέβησαν ἐπὶ τὸ πλάτος τῆς γῆς καὶ ⌜ἐκύκλευσαν τὴν παρεμβολὴν τῶν ἁγίων ᵀκαὶ τὴν πόλιν τὴν ἠγαπημένην, καὶ κατέβη πῦρ ‘ἐκ τοῦ οὐρανοῦ’ καὶ κατέφαγεν αὐτούς. 10 καὶ ὁ διάβολος ὁ πλανῶν αὐτοὺς ἐβλήθη εἰς τὴν λίμνην τοῦ πυρὸς ⌜καὶ θείου ὅπου °καὶ τὸ θηρίον καὶ ὁ ψευδοπροφήτης, καὶ βασανισθήσονται ἡμέρας καὶ νυκτὸς ᵅεἰς τοὺς αἰῶνας τῶν αἰώνων᾽. 11 Καὶ εἶδον θρόνον μέγαν λευκὸν καὶ τὸν καθήμενον ‘ἐπ᾽ αὐτόν’, οὗ ἀπὸ °τοῦ προσώπου ἔφυγεν ἡ γῆ καὶ ὁ οὐρανὸς καὶ τόπος οὐχ εὑρέθη αὐτοῖς. 12 καὶ εἶδον τοὺς νεκρούς, ᵅτοὺς μεγάλους καὶ τοὺς μικρούς,᾽ ἑστῶτας ἐνώπιον τοῦ θρόνου. καὶ βιβλία ⌜ἠνοίχθησαν, καὶ ἄλλο βιβλίον ἠνοίχθη, ὅ ἐστιν τῆς ζωῆς, καὶ ἐκρίθησαν οἱ νεκροὶ ἐκ τῶν γεγραμμένων ἐν ‘τοῖς βιβλίοις’ κατὰ τὰ ἔργα αὐτῶν. 13 καὶ ἔδωκεν ἡ θάλασσα τοὺς ‘νεκροὺς τοὺς ἐν αὐτῇ’ καὶ ὁ θάνατος καὶ ὁ ᾅδης ⌜ἔδωκαν τοὺς ‘νεκροὺς τοὺς ἐν αὐτοῖς’, καὶ ⌜ἐκρίθησαν ἕκαστος κατὰ τὰ ἔργα ⌜¹ αὐτῶν. 14 καὶ ὁ θάνατος καὶ ὁ ᾅδης ἐβλήθησαν εἰς τὴν λίμνην τοῦ πυρός. ᵅᵀ οὗτος ὁ ‘θάνατος ὁ δεύτερός’ ἐστιν, ἡ λίμνη τοῦ πυρός.᾽ 15 καὶ εἴ τις οὐχ εὑρέθη ἐν ‘τῇ βίβλῳ’ τῆς ζωῆς γεγραμμένος, ἐβλήθη εἰς τὴν λίμνην τοῦ πυρός.

The Greek Text

R.H. Charles called Revelation 20 'a constant source of unsurmountable difficulty to the exegete' and could see no way to solve the problem except by a radical rearrangement of the text which he proceeded to carry out.[13] He expressed amazement at this perceived disorder in the concluding part of Revelation because elsewhere he found 'a structural unity and a steady development of thought from the first chapter to the close of 20:3'.

The 26th edition of Nestle-Aland's Greek NT reminds us that the textual scene and history of the Book of Revelation differ greatly from the rest of the NT writings. There is a relative paucity of early Greek witnesses. It is absent from codex B and poorly represented in ℵ. So the Textus Receptus merits greater attention than it normally obtains.

However, Charles' lament about the logic of Revelation 20 cannot be blamed on the available Greek text. It is straight forward, however poorly attested (relatively speaking). Hence Metzger's Textual Commentary notes only 3 minor textual variants.

Verse 2 ὁ ὄφις ὁ ἀρχαῖος a nominative variant, is preferred over the normal accusative found in the Textus Receptus, since Revelation regularly retains the nominative forms for titles or proper names.

Verse 6 there is an even balance between those MSS that have an article before χίλια ἔτη and those that do not.

Verse 9 [fire came down] 'from heaven' has seven variants e.g. 'from God', 'out of heaven from God' etc.

---

13 R.H. Charles, *A Critical and Exegetical Commentary on the Revelation of St John*, 2 vols, (ICC) (Edinburgh: T&T Clark, 1920) 144ff.

RSV 1952

20 Then I saw an angel coming down from heaven, holding in his hand the key of the bottomless pit and a great chain. [2]And he seized the dragon, that ancient serpent, who is the Devil and Satan, and bound him for a thousand years, [3]and threw him into the pit, and shut it and sealed it over him, that he should deceive the nations no more, till the thousand years were ended. After that he must be loosed for a little while. [4]then I saw thrones, and seated on them were those to whom judgment was. Also I saw the souls of those who had been beheaded for their testimony to Jesus and for the word of God, and who had not worshipped the beast or its image and had not received its mark on their foreheads or their hands. They came to life, and reigned with Christ a thousand years. [5]The rest of the dead did not come to life until the thousand years were ended. This is the first resurrection. [6]Blessed and holy is he who shares in the first resurrection! Over such the second death has no power, but they shall be priests of God and of Christ, and they reign with him a thousand years. [7]and when the thousand years are ended, Satan will be loosed from his prison [8]and will come out to deceive the nations which are at the four corners of the earth, that is, Gog and Magog, to gather them for battle; their number is like the sand of the sea. [9]And they march up over the broad earth and surrounded the camp of the saints and the beloved city; but fire cam down from heaven and consumed them, [10]and the devil who had deceived them was thrown into the lake of fire and brimstone where the beast and the false prophet were, and they will be tormented day and night for ever and ever. [11]Then I saw a great white throne and him who sat upon it; from his presence earth and sky fled away, and no place was found for them. [12]and I saw the dead, great and small, standing before

GNB 1966/1976

The Thousand Years

20 Then I saw an angel coming down from heaven, holding in his hand the key of the abyss and a heavy chain. [2]He seized the dragon, that ancient serpent—that is, the Devil, or Satan—and chained him up for a thousand years. [3]The angel threw him into the abyss, locked it, and sealed it, so that he could not deceive the nations any more until the thousand years were over. After that he must be let loose for a little while. [4]Then I saw thrones, and those who sat on them were given the power to judge. I also saw the souls of those who had been executed because they had proclaimed the truth that Jesus revealed and the word of God. They had not worshipped the beast or its image, nor had they received the mark of the beast on their foreheads or their hands. They came to life and rule as kings with Christ for a thousand years. [5](The rest of the dead did not come to life until the thousand years were over.) This is the first raising of the dead. [6] Happy and greatly blessed are those who are included in this first raising of the dead. The second death has no power over them; they shall be priests of God and of Christ, and they will rule with him for a thousand years.

The Defeat of Satan

[7]After the thousand years are over, Satan will be let loose from his prison, [8]and he will go out to deceive the nations scattered over the whole world, that is, Gog and Magog. Satan will bring them all together for battle, as many as the grains of sand on the sea-shore. [9]They spread out over the earth and surrounded the camp of God's people and the city that he loves. But fire came down from heaven and destroyed them. [10]Then the Devil, who deceived them, was

the throne, and books were opened. Also another book was opened, which is the book of life. And the dead were judged by what was written in the books, by what they had done. 13and the sea gave up the dead in it, Death and Hades gave up the dead in them, and all were judged by what they had done. 14Then Death and Hades were thrown into the lake of fire. This is the second death, the lake of fire; 15and if any one's name was not found written in the book of life, he was thrown into the lake of fire.

thrown into the lake of fire and sulphur, where the beast and the false prophet had already been thrown; and they will be tormented day and night for ever and ever.

The Final Judgement

11Then I saw a great white throne and the one who sits on it. Earth and heaven fled from his presence and were seen no more. 12And I saw the dead, great and small alike, standing before the throne. Books were opened, and then another book was opened, the book of the living. The dead were judged according to what they had done, as recorded in the books. 13Then the sea gave up its dead. Death and the world of the dead also gave up the dead they held. And all were judged according to what they had done. 14then death and the world of the dead were thrown into the lake of fire. (This lake of fire is the second death.) 15Whoever did not have his name written in the book of the living was thrown into the lake of fire.

A comparison of the treatment of this apocalyptic passage in RSV and GNB reveals that the GNB does not show the same freedom as in the other six sample texts surveyed. One is struck by the conservatism of the DE translation in this instance.

Accordingly our commentary will take the two versions together.

	RSV	**GNB**
		The Thousand Years
20:1	Then I saw an angel coming down from heaven holding in his hand the key of the bottomless pit and a great chain.	Then I saw an angel coming down from heaven, holding in his hand the key of the abyss and a heavy chain.

The RSV preserves the KJV reading in toto except that the initial narrative marker καί is translated by 'Then' instead of 'and'.

The GNB provides a title 'The Thousand Years' for verses 1-6. Its rendering of verse 1 follows that of the RSV except that it translates ἀβύσσου literally by 'abyss'

deserting the natural equivalent 'bottomless pit' provided by KJV and RSV! It also prefers 'heavy chain' rather than great chain for ἅλυσιν μεγάλην.

	RSV	GNB
20:2	And he seized the dragon, that ancient serpent, who is the Devil and Satan, and bound him for a thousand years,	He seized the dragon, that ancient serpent—that is, the Devil, or Satan—and chained him up for a thousand years.

Again the differences are minor and stylistic. GNB does not translate the initial καί. On its second occurrence it is rendered 'or' making clear that the Devil and Satan are to be understood as the same creature (cf. 12:9).

In passing we note that the words 'dragon' and 'Satan', like 'abyss', are all Greek loan words which have come into English via Bible translation. The language would not have been expanded and enriched had translators insisted on natural equivalents.

	RSV	GNB
20:3	And threw him into the pit, and shut it and sealed it over him, that he should deceive the nations no more, till the thousand years were ended. After that he must be loosed for a little while.	The angel threw him into the abyss, locked it, and sealed it, so that he could not deceive the nations any more until the thousand years were over. After that he must be let loose for a little while.

GNB repeat the subject 'angel' and replaces 'and' with a new sentence. Its 'locking' of the abyss is more awkward than RSV's 'shut' (for ἔκλεισεν).

The image of the imprisonment of the Devil has a long and complex history in Ancient Near East folk lore. More to the point there are precedents nearer at hand in OT and Jewish apocalyptic literature. The essence of what we read in Revelation 19:19 to 21:3 is summarized in Isaiah 24:21 ff. The binding of evil spirits is a key motif in the book of Enoch especially the punishment of Azazel in En 10:4ff. Likewise the Prayer of Manasseh, verse 3 has an invocation to the Lord Almighty 'who has confined the ocean by the word of command, who has shut up the abyss and sealed it with your fearful and glorious name'. This prayer, which appears to echo the ancient myth of the conquest of the sea monster, has close verbal agreement with Rev 20:1-3.[14]

The point is that the more the translation preserves the formal features of the ST the more chance the reader has of picking up the literary allusions. John is using

---

14 See G.R. Beasley-Murray, *The Book of Revelation*, (London: Oliphants, 1974) 285-7.

conventional mythical symbolism to portray the defeat of Satan and the victory of God's Messiah.

	RSV	GNB
20:4	Then I saw thrones, and seated on them were those to whom judgment was committed. also I saw the souls of those who had been beheaded for their testimony to Jesus and for the word of god, and who had not worshipped the beast or its image and had not received its mark on their foreheads or their hands. They came to life, and reigned with Christ a thousand years.	Then I saw thrones, and those who sat on them were given the power to judge. I also saw the souls of those who had been executed because they had proclaimed the truth that Jesus revealed and the word of god. they had not worshipped the beast or its image, not had they received the mark of the beast on their foreheads or their hands. They came to life and ruled as kings with Christ for a thousand years.

John's purpose in these verses is to encourage Christ's confessors to remain firm in their loyalty and testimony. The opening sentence quotes and adapts the judgement scene from Daniel 7:9ff where the raging of the anti-God power is brought to an end by the Ancient of Days whose judgement is to deprive these earthly powers of their rule and to deliver the kingdom to 'one like a son of man'. John interprets Daniel's statement about 'the saints of the Most High' in the light of Jesus' words. (Matt 19:28, Luke 22:30.)

By attempting smoother and more natural English in verse 4f. both RSV and GNB obscure the echo of Daniel 7 preserved in the more literal rendering of the KJV: 'And I saw thrones and they sat upon them and judgement was given to them'. Such OT allusions were of course highlighted in the earlier Nestle—Greek text but not in the modern Nestle—Aland edition, regrettably.

The RSV interprets Ἰησοῦ as an objective genitive and renders 'testimony to Jesus'. The GNB makes explicit what it understands by the three Greek words and paraphrases 'because they had proclaimed the truth that Jesus had revealed'. Thus μαρτυρία belongs to 'them' and not to 'Jesus'.

However, a strong case could be made out for taking 'Ιησοῦ as a subjective genitive on analogy with the following λόγος τοῦ θεοῦ and because of the use of μάρτυς as Christological title in 1:5; 3:14. Thus the μαρτυρία' Ιησοῦ would be the contents of this book, the prophecy revealed to John.

The GNB paraphrase of μαρτυρία is also unwise because it is a motif in the Johannine writings, as A.A. Trites has shown,[15] building on the earlier work of G.B. Caird.[16] The phrase ἡ μαρτυρία Ἰησοῦ occurs six times in Revelation, and is of great significance for the seer's concept of witness (1:2,9; 12:17; 19:10 (twice); 20:4).

καὶ οἵτινες οὐ προσεκύνησαν τὸ θηρίον... RSV translates this long sentence literally. GNB makes the verse a bit more digestible by starting a new sentence here as it does again at 'They came to life and ruled as kings...' The addition of 'as kings' (as a result of componential analysis of βασιλεύω?) is unnecessary.

	RSV	GNB
20:5	The rest of the dead did not come to life until the thousand years were ended. This is the first resurrection.	(The rest of the dead did not come to life until the thousand years were over.) This is the first raising of the dead.

GNB puts most of this verse in parenthesis presumably to clarify the link between verse 4 and the subsequent αὕτη ἡ ἀνάστασις ἡ πρώτη (a semitic construction) is an expression not found elsewhere in the NT (though the doctrine of two resurrections may well be implied in 1 Cor 15:22-24). Here and in verse 6 GNB replaces 'resurrection' with the more pedestrian 'raising of the dead'.

	RSV	GNB
20:6	Blessed and holy is he who shares in the first resurrection! Over such the second death has no power, but they shall be priests of God and of Christ, and they shall reign with him a thousand years.	Happy and greatly blessed are those who are included in this first raising of the dead. The second death has no power over them; they shall be priests of God and of Christ, and they will rule with him for a thousand years.

GNB's 'Happy and greatly blessed' is a strange translation of μακάριος καὶ ἅγιος. ἅγιος has either been omitted or mistranslated.

RSV retains the Greek word order: 'over such the second death has no power' whereas GNB's 'the second death has no power over them' loses the focus of the ST.

Both RSV and GNB have 'But they shall be priests of God and of Christ' would be better rendered 'of **the** Christ' since it is a messianic title in John's writings.

---

15 A.A. Trites, *The New Testament Concept of Witness*, SNTSMS 31, (Cambridge: Cambridge University Press, 1977) 154f.

16 G.B. Caird, *The Revelation of St John the Divine*, (London: A&C Black 1966) 17-18.

	RSV	GNB
		The Defeat of Satan
20:7	And when the thousand years are ended, Satan will be loosed from his prison	After the thousand years are over, Satan will be let loose from his prison,

GNB provides a title 'The Defeat of Satan' for verses 7-10. There is no significant difference between the two versions in v.7.

	RSV	GNB
20:8	and will come out to deceive the nations which are at the four corners of the earth, that is, God and Magog, to gather them for battle; their number is like the sand of the sea.	and he will go out to deceive the nations scattered over the whole world, that is Gog and Magog. Satan will bring them all together for battle, as many as the grains of sand on the sea-shore.

There is little difference between the two versions. GNB starts a new sentence in the middle of the verse making clear that 'Satan' is the subject. It drops the figure of 'the four corners of the earth' (cf Ezek 7:2) which becomes the nations 'scattered over the whole world' but preserves the second figure 'as the grains of sand on the sea shore'.

It is significant that GNB makes no attempt to explain the mysterious 'Gog and Magog', a motif as early as the Tell el-Amarna tablets for the hostile nations of the north. The symbol is taken up by Ezekiel in chapters 38-39 (and by Jewish apocalyptic writers, e.g. 2 En 56:5ff; 2 Esd 13:5ff; Sib. Or 3:662ff) representing Gentile hosts massed against the faithful of Israel.[17]

	RSV	GNB
20:9	And they marched up over the broad earth and surrounded the camp of the saints and the beloved city; but fire came down from heaven and consumed them,	They spread out over the earth and surrounded the camp of God's people and the city that he loves. But fire came down from heaven and destroyed them.

This verse in the ST is full of LXX allusions that inevitably become obscure in any version seeking naturalness of expression in the RL. The only serious criticism of the GNB here, however, is the loose rendering of οἱ ἁγίοι 'the people of God'. The phrase (i.e. with the article) always has a Jewish reference in both OT and NT[18], which certainly is the background of the LXX allusions here.

---

17 See G.R. Beasley-Murray, *The Book of Revelation*, (London:: Oliphants) 1974, 297.

18 See D.W.B. Robinson, 'Who were "the saints"?', *RTR* 22 (1963) 45-53.

	RSV	GNB
20:10	and the devil who had deceived them was thrown into the lake of fire and brimstone where the beast and the false prophet were, and they will be tormented day and night for ever and ever.	Then the Devil, who deceived them, was thrown into the lake of fire and sulphur, where the beast and the false prophet had already been thrown; and they will be tormented day and night for ever and ever.

GNB differs from RSV only in making explicit that the beast and the false prophet 'had already been thrown' into the lake of fire and brimstone.

	RSV	GNB **The Final Judgement**
20:11	then I saw a great white throne and him who sat upon it; from his presence earth and sky fled away, and no place was found for them.	Then I saw a great white throne and the one who sits on it. Earth and heaven fled from his presence and were seen no more.

GNB proves a title for verses 11-15—'The Final Judgement'

GNB rearranges the word order of verse 11 in the interest of natural English such that the RSV's literal 'from his face earth and heaven fled away' becomes in GNB 'Earth and heaven fled from his presence'. Similarly RSV's 'no place was found for them' becomes 'and were seen no more' in GNB. Again this obscures inter textual allusions to Daniel and the Psalms.

	RSV	GNB
20:12	And saw the dead, great and small, standing before the throne, and books were opened. Also another book was opened, which is the book of life. And the dead were judged by what was written in the books, by what they had done.	And I saw the dead, great and small alike, standing before the throne. Books were opened, and then another book was opened, the book of the living. The dead were judged according to what they had done, as recorded in the books.

GNB follows RSV in breaking this long verse into 3 separate sentences. Likewise its rendering of the Greek is similar. However for some reason RSV's literal 'book of life' is replaced by 'book of the living'. Then GNB replaces RSV's rather awkward 'the dead were judged by what was written in the books by what they had done' with 'The dead were judged according to what they had done as recorded in the books'.

The KJV's literal 'according to their works' is superior to both.

	RSV	GNB
20:13	And the sea gave up the dead in it, Death and Hades gave up the dead in them, and all were judged by what they had done	Then the sea gave up its dead. Death and the world of the dead also gave up the dead they held. And all were judged according to what they had done.

We are reminded by many OT passages (e.g. 1 Kgs 13:21f; 14:11; Jer 8:11f) that to remain unburied after death was a terrible fate. The fact that the sea as well as 'death and Hades' surrender the dead emphasizes the inescapability of the judgement and the sovereignty of the risen Lord.

GNB differs from the RSV only in its paraphrase of 'Hades' and 'the world of the dead' (cf 1:18).

Both versions again render κατὰ τὰ ἔργα αὐτῶν by a verbal phrase 'according to what they had done'.

	RSV	GNB
20:14 -15	Then Death and Hades were thrown into the lake of fire. This is the second death, the lake of fire; 15and if any one's name was not found written in the book of life, he was thrown into the lake of fire.	Then death and the world of the dead were thrown into the lake of fire. (This lake of fire is the second death.) 15Whoever did not have his name written in the book of the living was thrown into the lake of fire.

Again GNB is content to follow RSV in the last two verses. 'Hades' again becomes 'the world of the dead' and RSV's literal 'this is the second death, the lake of fire' is turned into an explanation by GNB 'This lake of fire is the second death.

Summary

Except for the relatively minor differences we have noted, the GNB translation of Revelation 20 preserves more of the forms of the ST than we have observed in the other six sample texts.

It is not clear whether this conservatism is influenced by the wealth of Biblical allusion that would be totally lost in a clear, natural and explicit rendering. Or is it perhaps that the bewildering imagery of apocalyptic made the translator less confident that the message could be extracted from its ST forms?

TL 1938/1952

Iblis terbelenggu seribu tahun lamanja

20 Maka aku tampak seorang malaekat turun dari langit memegang anak kuntji pintu lubang jang tiada terduga dalamnja dan suatu rantai besar didalam tangannja: (f*s.9:1; 2Petr .2:4; Jahud. 6.*) 2maka iapun memegangkan naga itu, jaitu ular tua, jang mendjadi Iblis dan Sjaitan, dan merantaikan dia seribu tahun lamanja, (*fs.12:9.*) 3dan mentjampakkan dia kedalam lubang jang tiada terduga dalamnja itu, lalu menutup lubang itu, dan membubuh meterai diatasnja, supaja tiada ia menjesatikan segala bangsa lagi, sehingga genap seribu tahun itu; kemudian daripada itu tak dapat tiada ia akan dilepaskan kelak sedikit masa lamanja. (*2 Tes. 2:9, 10.*)

Dari hal keradjaan seribu tahun

4Maka aku tampaklah beberapa tachta, dan ada orang duduk diatasnja, maka kepada mereka itu diserahkan kuasa menghukumkan; dan lagi aku tampak segala njawa orang jang dipantjung kepalanja sebab menjaksikan Jésus dan firman Allah, dan jang tiada menjembah binatang itu atau patungnja , dan jang tiada bertanda didahinja atau ditangannja. Maka mereka itu sekalian hidup balik dan memerintah beserta dengan Keristus seribu tahun lamanja. (*Dan. 7:9, 22, 27; Luk. 22:30; 1Kor. 6:2*) 5Tetapi segala orang mati jang lain itu tiada hidup balik sehingga genap seribui tahun itu; make inilah kebangkitan jang pertama. (*1 Kor.15:23; 1 Tes. 4:16.*) 6Berbahagialah dan kuduslah orang, jang masuk bahagian didalam kebangkitan jang pertama itu; maka mati jang kedua tiada berkuasa atas mereka itu, melainkan mereka itu mendjadi imam kepada Allah dan kepada Keristus, dan akan memerintah beserta dengan Dia seribu tahun lamanja. (*fs.5:10.*)

TB 1976

Kerajaan seribu tahun 20:1-6

20 Lalu aku melihat seorang malaikat turun dari sorga memegang anak kunci jurang maut dan suatu rantai besar di tangannya; 2ia menangkap naga, si ular tua itu, yaitu Iblis dan Satan. Dan ia mengikatnya seribu tahun lamanya, lalu melemparkannya ke dalam jurang maut, 3dan menutup jurang maut itu dan memeteraikannya di atasnya, supaya ia jangan lagi menyesatkan bangsa-bangsa, sebelum berakhir masa seribu tahun itu; kemudian dari pada itu ia akan dilepaskan untuk sedikit waktu lamanya. 4Lalu aku melihat takhta-takhta dan orang-orang yang duduk di atasnya; kepada mereka diserahkan kuasa untuk menghakimi. Aku juga melihat jiwa-jiwa mereka, yang telah dipenggal kepalanya karena kesaksian tentang Yesus dan karena firman Allah; yang tidak menyembah binatang itu dan patungnya dan yang tidak juga memerima tandanya pada dahi dan tangan mereka; dan mereka hidup kembali dan memerintah sebagai raja bersama-sama dengan Kristus untuk masa seribut tahun. 5Tetapi orang-orang mati yang lain tidak bengkit sebelum berakhir masa yang seribu tahun itu. 6Inilah kebangkitan pertama. Berbahagia dan kuduslah ia, yang mendapat bagian dalam kebangkitan pertama itu. Kematian yang kedua tidak berkuasa lagi atas mereka, tetapi mereka akan menjadi imam-imam Allah dan Kristus, dan mereka akan memerintah sebagai raja bersama-sama dengan Dia, seribu tahun lamanya.

ay 2: Kej 3:1 ay 4: Dan 7:9,22

Iblis dihukum 20:7-10

7Dan setelah masa seribu tahun itu berakhir, Iblis akan dilepaskan dari penjaranya, 8dan ia akan pergi menyesatkan bangs-bangsa pada

Ketewasan naga dan Jadjudj wa Madjudj

7Apabila genap seribu tahun itu, maka Iblispun akan dilepaskan pula dari dalam belenggunja. 8lalu keluar hendak menjesatkan segala bangsa jang ada didalam empat pendjuru alam, seperti Jadjudj wa Madjudj, supaja menghimpunkan mereka itu akan berperang, maka banjaknha mereka itu seperti pasir dipantai laut. (*Jehez. 38:2, 9, 19.*) 9Maka mereka itupun naiklah ketanah jang luas, lalu mengepungi tempat bala tentara segala orang sutji dan negeri jang dikasihinja itu; maka turunlah api dari langit menghanguskan mereka itu. (*Jehez. 38:22; 39:6; Zach.12:9.*) 10Maka Iblis jang menjesatkan mereka itu tertjampaklah kedalam laut api dan belerang itu, ditempat binatang dan nabi palsu itu ada, maka mereka itu akan terkena siksa siang malam selama-lamanja.

Dari hal keputusan hukum jang achir

11Maka aku tampak suatu arasj putih jang besar, dan Jang duduk diatasnja; daripada hadiratnjalah bumi dan langit itu lenjap,sehingga tempantnjapum tiada didapati lagi. (*Mat. 25:31-46; 2 Petr. 3:7, 10, 12.*)

12Maka aku tampak segala orang mati, besar ketjil, berdiri dihadapan aras itu, dan segala kitabpun, dibukakanlah; dan dibukakan pula sebuah kitab jang lain, jaitu kitab hajat; maka segala orang jang mati itu dihukumkan menurut segala perbuatannja jang tersurat didalam kitab-kitab itu. (*fs.3:5; Dan.7:10; Rum 2:6; Phil. 4:3.*)

13Lalu laut itupun mengeluarkan segala orang jang sudah mati didalamnja, dan maut serta alam maut itu pula mengeluarka segala orang jan sudah mati didalamnja; lalu mereka itu keempat penjuru bumi, yaitu God dan Magog, dan mengumpulkan mereka sama dengan banyaknya pasir di laut. 9Maka naiklah mereka ke seluruh dataran bumi, lalu mengepung perkemahan tentar orang-orang kudus dan kota yang disasihi itu. Tetapi dari langit turunlah api menghanguskan mereka, dan Iblis, yang menyesatkan mereka, dilemparkan ke dalam lautan api dan belerang, yaitu tempat binatang dan nabi palsu itu, dan mereka disiksa siang malam sampai selama-lamanya.

ay 8: Yeh 7:2, 38:2, 9, 15

Hukuman yang terakhir 20:11-15

11Lalu aku melihat suatu takhta putih yang besar dan Dia, yang duduk di atasnya. Dari hadapanNya lenyaplah bumi dan langit dan tidak ditemukan lagi tempatnya. 12Dan aku melihat orang-orang mati, besar dan kecil, berdiri di depan takhta itu. Lalu dibuka semua kitab. Dan dibuka juga sebuah kitab lain, yaitu kitab kehidupan. Dan orang-orang mati dihakimi menurut perbuatan mereka, berdasarkan apa yang ada tertulis di dalam kitab-kitab itu.13Maka laut menyerahkan orang-orang mati yang ada di dalamnya, dan mereka dihakimi masing-masing meurut perbuatannya. 14Lalu maut dan kerajaan maut itu dilemparkanlah ke dalam lautan api. Itulah kematian yang kedua: lautan api. 15Dan setiap orang yang tidak ditemukan namanya tertulis di dalam kitab kehidupan itu, ia dilemparkan ke dalam lautan api itu.

ay 11-12: Dan 7:9-10

dihukumkanlah menurut perbuatan masing-masing. (*Jahj. 5:28, 29.*)
14Maka maut dan alam maut itupun ditjampakkanlah kedalam laut api itu; inilah mati jang kedua, jaitu laut api. (*1 Kor. 15:26, 55.*) 15Dan djikalau barang seorang tiada didjumpai namanja tersurat didalam kitab hajat itu, maka iapun ditjampakkanlah kedalam laut api itu. (*fs. 19:20; Mat.25:41.*)

BIS 1977/1985

Tentang waktu seribu tahun

20 Setelah itu saya melihat seorang malaikat turun dari surga. Di tangannya ia memegang kunci jurang maut dan sebuah belenggu yang besar.. 2Lalu ia menangkap naga itu, si ular tua,—yaitu Iblis atau Roh Jahat itu—dan membelenggunya untuk seribu tahun lamanya. 3Kemudian malaikat itu membuang naga itu ke dalam jurang maut, lalu mengunci jurang itu dan menyegelnya, supaya naga itu tidak lagi dapat menipu bangsa-bangsa sebelum masa seribu tahun itu habis. Sesudah itu ia harus dilepaskan untuk waktu yang singkat. 4Lalu saya melihat takhta-takhta, dan orang-orang duduk di takhta-takhta itu diberi kuasa untuk memutuskan hukuman. Saya melihat juga jiwa-jiwa orang-orang yang sudah dipenggal kepalanya karena mereka memberi kesaksian tentang Yesus, dan menyebarkan pesan dari Allah. Orang-orang itu tidak menyembah binatang, ataukpun patungnya. Mereka pun tidak pernah menerima tanda binatang itu pada dahi atau pada tangan mereka. Maka mereka hidup kembali dan memerintah sebagai raja bersama Kristus selama seribu tahun. 5Inilah tahap pertama orang-orang mati dibangkitkan kembali. (Tetapi orang-orang mati lalnya tidak dihidupkan kembali selama masa seribu tahun itu.) 6Berbahagialah orang-orang yang turut dibangkitkan kembali pada tahap pertama itu. Mereka layak menjadi milik Allah. Kematian tahap kedua tidak berkuasa atas mereka. Mereka akan menjadi imam-imam Allah dan iman-imam Kristus; dan mereka akan memerintah bersama dia seribu tahun lamanya.

Iblis dikalahkan

7Sesudah habi masa seribu tahun itu, Iblis akan delepaskan dari penjaranya, 8dan ia akan pergi menipu bangsa-bangsa yang tersebar di seluruh dunia, yaitu Gog dan Magog. Iblis mengumpulkan mereka untuk berperang, suatu jumlah yang besar sekali, sebanyak pasir di laut. 9Maka mereka pun berpencarlah ke seluruh dunia, lalu mengepung perkemahan umat Allah dan kota yang dikasihi Allah. Tetapi api turun dari langit dan mumusnahkan mereka. 10Kemudian Iblis yang menipu mereka itu, dilemparkan ke dalam lautan api dan belerang. Di situlah tempatnya binatang dan nabi palsu itu dibuang terlebih dahulu. Mereka akan disiksa siang malam untuk selama-lamanya.

Hukuman terakhir

11Setelah itu saya melihat sebuah takhta putih yang besar dan dia yang duduk di atasnya. Langit dan bumi lenyap dari hadapannya, sehingga ti dak kelihatan lagi. 12Dan saya melihat orang-orang mati, besar kecil, berdiri di depan takhta itu. Maka buku-buku pun dibukalah. Lalu sebuah buku yang lain dibuka, yaitu Buku Orang

> Hidup. Kemudian hukuman dijatuhkan ke atas orang mati, setimpal dengan perbuatan mereka menurut yang tercatat di dalam buku-buku itu. [13]Lalu laut menyerahkan orang-orang mati yang ada di dalamnya. Maut dan Alam Maut pun menyerahkan orang-orang mati yang ada padanya. Dan orang-orang mati itu semuanya dijatuhi hukuman setimpal dengan perbuatan mereka. [14]Kemudian Maut dan Alam Maut dilemparkan ke dalam lautan api. (Lautan api ini adalah kematian tahap kedua.) [15]Orang-orang yang tidak tertulis namanya di dalam Buku Orang Hidup, dibuang ke dalam lautan api.

Terjemahan Lama (1879/1958)(TL)

The Old Translation (TL) gives the following section headings 'Satan Bound for a Thousand Years' verses 1-3, 'The Kingdom of 100 Years' verses 4-6, 'The Slaying of the Dragon and Gog and Magog' verses 7-10, 'The Decision of the Final Judgement' verses 11-15.

The TL translation is conservative following the ST closely. Some points of interest include its rendering of 'abyss' by 'a hole whose depth cannot be guessed'— *lubang yan tiada terduga dalamnya* . *Iblis* (Devil) and *Sjaitan* (Satan) are in the Malay-Indonesian vocabulary through the influence of Islam. The dragon is also rendered suitably by *naga*—the mythical creature that is well known in Chinese and SE Asian mythology, as is 'dragon' in European legends.

TL preserves 'testimony' in 20:4 but like RSV and GNB interprets τὴν μαρτυρίαν Ἰησοῦ as an objective genitive ('because they witnessed to Jesus and the word of God').

'Resurrection'—*kebangkitan* presents no problems as Islam has already introduced the concept.

Terjemahan Baru (1974)(TB)

The TB updates the language to contemporary usage while preserving an FC approach.

The 'abyss' is rendered by *jurang maut*—'ravine of death'. *Iblis* is retained for 'Devil' but *Roh Jahat*—'Evil Spirit' now translates ὁ Σατανᾶς.

In verse 8 Gog and Magog are transliterated whereas TL used *Judjudj wa Madjuj* (whose origin I do not know).

TB has three section headings which in back translation read:

20:1-6	The Kingdom of One Thousand Years

20:7-10 The Devil Punished

20:11-15 The Final Judgement.

Bahasa Indonesia Sehari-hari (1985)(BIS)

A comparison with GNB reveals that the latter was a model and often a base for BIS readings. This is also true of the Malay New Testament (TMV). Thus the GNB's three section headings are translated. GNB's shorter sentences are reproduced. Other indications of direct dependence are:

Verse 3 BIS (and TMV) reproduces GNB's 'locked' rather than 'shut' for ἔκλεισεν.

Verse 4 BIS (and TMV) translate the GNB paraphrase of διὰ τὴν μαρτυρίαν Ἰησοῦ καὶ διὰ τὸν λόγον τοῦ θεοῦ.

Verse 5 GNB's 'This is the first raising of the dead" is expanded to 'This is the first stage of dead people being made alive again'. This is not the same concept as 'resurrection', the term for which already exists thanks to Islam.

Verse 6 Both BIS and TMV echo GNB's mistranslation of ἅγιος.

Verses 7 to 15 follow the GNB very closely. GNB features includes 'over the whole world' instead of ST's 'in the four corners of the earth'.

vs.8 'people of God' rather than 'the saints/holy ones'

vs.9 'the city that He loves' rather than 'the beloved city'
'destroyed' rather than 'consumed'

vs.10 the interpolation 'had already been thrown'

vs.11 'and were seen no more' for 'no place was found for them'

vs.12 'the Book of the Living' instead of 'the Book of Life'
'according to what they had done' instead of 'according to their works'.

The Indonesian and Malay versions do seem to appeal over the head of the GNB to the Greek (or an FC translation) in a few cases:

Thus in **verse 1** both BIS and TMV speak of 'a big chain' rather than the GNB's 'heavy chain'.

In **verse 4** BIS returns to the ST's 'beheaded' rather than GNB's 'executed'.

In **verses 5 and 6** the Malay version uses the noun 'resurrection' replaced by a verbal phrase in GNB and BIS.

Summary

Our examination of the English and Indonesian translations of Revelation chapter 20 show that the DE versions exhibit a more conservative tendency than we observed in their rendering of the other six sample texts. More respect for the formal features of the ST is generally evident. It is not clear whether the translators' usual confidence that they can extract the 'real meaning' had deserted them or whether they have recognized that the wealth of Biblical allusion would be lost if the usual overriding priority were given to clear, natural explicit English.

Once again however we have noted the profound influence of the GNB on its Indonesian and Malay DE counterparts.

CONCLUSION

We have examined the translation of seven representative Biblical texts with a view to noting and evaluating the characteristics of the GNB. Noting that in the past twenty five years, DE translations of the Bible have appeared in many major languages other than English, we have also compared recent versions in the Indonesian language. Bahasa Indonesia was chosen because it is the national language of two hundred million people, in the world's fifth largest nation.

In recent years there has been a proliferation of new English versions, most of which get little more than passing mention in this thesis. Our comparison has been between the RSV and the GNB, because these are arguably the two most significant versions of this century and have been the main reference points for Bible translators in the period under consideration (i.e., 1960–1985).

In the translation of **Genesis 1** we noted that the GNB's concern for naturalness and clarity resulted in the neglect of such formal features of the ST as repetition, formulae, key words ('God', 'earth') and chiasmus, which modern commentators would see as important for understanding the text. The Indonesian DE version BIS is virtually a straight translation of GNB. In following its model, BIS even replaces the traditional 'Allah *berfirman*' with 'Allah *berkata*'—a verb no Indonesian would use with 'Allah' as the subject. This rendering could be justified in terms of faithfulness to the ST but would be offensive to most Indonesians. It is ironic that the DE version has

abandoned the natural, dynamic equivalent used in the older more conservative versions.

In the translation of **2 Samuel 7:1-17** the GNB obscures what has been called 'an intricate interweaving of two motifs 'house of Yahweh' and 'house of David' - that is temple and dynasty'[19] by its various renderings of בית according to the nuance deemed uppermost. It drops other key Biblical expressions such as 'for my name', 'I will give you rest', 'I will plant' Israel, 'my steadfast love', all of which link the oracle with the covenant promises. The removal of narrative markers and the paraphrase of such prophetic formulae as 'the word of the Lord came to Nathan' and 'Thus says the Lord' change this very solemn oracle into a brusque and pedestrian statement. The Indonesian BIS follows the GNB so closely that it is clear that the latter is the base for its renderings, rather than the Hebrew ST. It is interesting to contrast this with the Indonesian TL (1958), which employed the elegant courtly language of the Sultan's palace, thereby showing more dynamic equivalence than the supposed DE version.

The GNB's rendering of **Psalm 1** also focuses on communicating the information in the psalm, provides inclusive language and replaces metaphors by explanatory paraphrase. It also interpolates 'God' in three places. The ST refers only to יהוה

The translation of verses 5 and 6 is a condensed paraphrase. BIS does not pluralize the subject of the first three verses as 'orang' (person) is gender neutral. But in almost all other respects it follows the GNB and in verses 5 and 6 provides a literal translation of the GNB paraphrase.

We noted that with regard to **Zechariah 2:6-13** GNB dropped twelve figures of speech (many of which are rooted in the Biblical tradition) and anthropomorphic images of God. Apart from two minor departures the Indonesian BIS translates GNB.

The GNB translation of **Mark 1: 1-15** is considerably longer than that of the RSV because it aims to interpret and to be explicit. Particular attention was given to the GNB's translation of Mark 1:4 which Nida frequently commends as a fine example of DE translation of a verse with dense terminology and complex syntax. The GNB rendering involves a series of important exegetical decisions and a radical restructuring to make explicit the syntactic and semantic relationships deemed to be implicit in the ST. Thus 'baptism', 'repentance' and 'forgiveness' are all replaced by verbal forms.

---

19 P.K. McCarter, Jr., *II Samuel: A New Translation with Introduction and Commentary* (New York: Doubleday, 1984) 209-10.

What Nida fails to acknowledge is that Mark could have reported John the Baptist's preaching à la GNB, had he wished to do so (cf. Luke's report of Peter's call to baptism in Acts 2:38).

In its translation of Mark 1:1-15 BIS is clearly based on GNB and deviates from it in less than a dozen instances. With regard to verse 4 the GNB restructuring had already found its way into TB (1974). BIS expands the GNB paraphrase further by adding 'As it is written' at the beginning and 'Thus said John' at the end. It also expands GNB's literal 'baptizing and preaching' which becomes 'baptizing people and conveying the news from God'. BIS, however, does reinstate 'repent' (*'bertobat'*) instead of GNB's explanatory 'Turn away from your sins'. Of course *'bertobat'* is a term well known not only from earlier Bible versions, but because of its use in Islam.

Romans 3: 21-26 is commonly regarded as the thesis statement of Paul's letter to the Romans, that book of the Bible that has provoked the writing of more commentaries than any other. GNB's tendency to paraphrase results in a more verbose rendering of the 99 Greek words. A total of 174 words are used against 121 words in the RSV. Of particular significance is the GNB's dissipation of salvation vocabulary drawn from the OT, e.g. δικαιοσύνη θεοῦ, ἀπολύτρωσις, ἱλαστήριον, αἷμα.

Again BIS reads as a translation of GNB rather than of the ST, with a few independent flourishes, e.g., the insertion at the end of verse 25 'such that he did not punish them', in addition to the GNB's interpolation at the beginning of verse 26 'But in the present time he deals with their sins'. Both of these interpolations are recommended in the UBS *Translators Handbook on Romans* by Nida and Newman.

The disappearance of sacrificial terminology in BIS along with other key words, e.g., those representing δόξα and νόμος, fails to recognize not only their significance in the ST but also their naturalness in the Indonesian context where the Islamic religious milieu guarantees familiarity with animal sacrifice, 'law', and 'glory'.

In the translation of our final passage **Revelation 20,** we were surprised to find that the DE versions exhibited a more conservative tendency with regard to the formal features of the ST. It is not clear whether the bewildering apocalyptic imagery made the translators less confident that the message could be extracted from its ST forms or whether they realized that the wealth of inter-textual allusion would vanish in a clear, natural, and explicit translation. Certainly a translation that preserves the formal features of a passage such as this gives the reader more chance of spotting the many allusions to, for example, Ezekiel, Daniel, Isaiah and the Psalms.

Nevertheless, the profound influence of the GNB on its Indonesian (and Malay) counterpart is plain to see. Thus where the GNB does rearrange the word order in the interest of natural English (e.g. 20:11), BIS translates GNB. Other expressions peculiar to GNB are followed in the Indonesian and Malay versions. In only a few cases do they seem to appeal over the head of GNB to the ST, or to a FC translation.

In passing we note that language is not a closed mathematical system incapable of change. This chapter contains a number of Greek loan words that have come into English via Bible translation e.g. 'dragon', 'Satan', 'abyss'. The English language would not have been expanded and enriched had translators insisted on limiting themselves to natural equivalents.

This examination of the way DE translations work in practice has provided two outcomes. In the first place, it has raised some serious questions about the adequacy of DE versions of the Bible. Secondly, it has alerted us to some key issues that need further investigation. Accordingly, the following section of the thesis takes up the issues of 'natural common language' (Chapter 12), 'concordance' and the translation of technical terminology (Chapter 13), the treatment of historical and cultural 'distance' in the ST (Chapter 14), and the handling of implicit information and metaphor in the ST (Chapter 15).

IV Some Issues Arising From The Implementation Of DE Theory

CHAPTER TWELVE

THE LANGUAGE OF THE BIBLE AND NATURAL COMMON LANGUAGE

This chapter takes up the first of the issues raised in the preceding chapter, where we investigated DE translations and their handling of problems presented by the language of the ST.

A. LANGUAGE VARIETIES AND THE DEMAND FOR NATURALNESS

1. Language Varieties

Differences in language vary all the way from idiolectal curiosities to related but mutually unintelligible varieties. No language is completely homogeneous. Nida has pointed out that varieties differ in terms of time (older vs newer forms, archaisms, neologisms, etc.), geography (dialects), socio-economic classes or castes, circumstances of use, oral and written usage, types of discourse and literary genres.[1] Catford has categorized these varieties into two major classes: (i) those which exemplify permanent characteristics such as Idiolects (language variety related to the individual performer) and Dialects (language variety related to geographical, temporal or social provenance); and (ii) those which are transient in that they adjust to the situation of utterance such as Register, Style and Mode. Register is the variety related to the wider social role being played by the performer at the moment of utterance, e.g. 'scientific', 'religious', 'civil service' etc. Style refers to the performer's relation to the addressees, e.g. 'formal', 'colloquial', 'intimate'. Mode is the variety related to the medium, e.g. spoken or written, in which the performer is operating.[2]

All languages can be described in terms of a number of varieties then, but the number and nature of these differs from one language to another—a fact of great importance to be noted in connection with translation. Bible translators have to recognise this fact both with regard to the ST and to the RL. Nida himself has devoted much study to the subject. Thus in his earlier book *Bible Translating* (1947) the third chapter discusses the problem of translating the Bible into pre-literate languages. Similarly in

---

1 E.A. Nida and C.R. Taber, *The Theory and Practice of Translation*, (Helps for Translators, No.8; Leiden: Brill, 1969) 120-123 cf. W.L. Wonderly, *Bible Translation for Popular Use:* (Helps for Translators, Vol 7; London: United Bible Societies, 1968) 6-19

2 J.C. Catford, *A Linguistic Theory of Translation* (London: Oxford University Press, 1965) 84-85

TAPOT:Chapter 7 he focuses on the question of the literary status of the RL, differentiating situations in which a language has a long literary tradition, from those where the language has only recently been reduced to writing, or has only an oral literary tradition. He proposes appropriate strategies for each.

Firstly, with regard to the Biblical corpus itself 'one must recognize certain quite different styles and attempt to produce something which will be a satisfying dynamic equivalent.'[3] This should be reflected, he says, even in common language translations such as the TEV:

> The common language range is not a narrow band of monotonous usage. It contains a relatively wide variety of forms, so that a common language translation of the Gospel of Mark sounds different from the common language translation of the Epistle to the Hebrews. Mark and the writer to the Hebrews used widely differing literary styles when they wrote in Greek, and the differences are clearly carried over in a common language translation. Likewise, the narrative style of Joshua is quite distinct from the poetry of Job and the Psalms, both in the original Hebrew and in the common language translation.[4]

Secondly, Nida recognizes the varieties present in the RL and he advocates a number of different Bible translations in accordance with the needs of each group. Thus a major language such as English needs a number of different translations:

(a) a translation with ecclesiastical orientation;
(b) a common language translation which will reach out beyond the church constituency;
(c) a translation on a literary level which will exploit the total resources of a language.[5]

2. The Concern for Naturalness and Common Language

Despite this theoretical sensitivity to language varieties in both the ST and the RL, one has to ask whether in practice DE translations can do justice to the language varieties found in the ST. Furthermore there would seem to be a questionable assumption in DE theory that the ST always exhibits the quality of naturalness.

The concern for intelligibility, naturalness and simplicity is not of course a novel one in the history of the English Bible. Following Luther and Erasmus, William Tyndale, according to the well-known account, maintained that if God spared his life, before many years had passed he would cause a ploughboy to know more of the Scripture

---

3 E.A. Nida and C.R. Taber, *The Theory and Practice of Translation*, (Helps for Translators, No.8; Leiden: Brill, 1969) 129

4 E.A. Nida, *Good News for Everyone*, How to Use the Good News Bible, (Waco, Texas: Word Books, 1977) 107

5 Personal letter to the author from Dr Nida, September 25, 1979

than the learned men with whom he was contending. It has been said of Tyndale that he "fixed the type according to which the later labourers worked" and that "his influence decided that our Bible should be popular and not literary, speaking in a simple dialect, and that so by its simplicity it should be endowed with permanence".[6] Thus the KJV translators in their Preface to the Reader, acknowledge their debt to their predecessors and showed themselves true heirs of Tyndale by expressing their desire that the Scripture "may speak like itself, as in the language of Canaan, that it may be understood even of the very vulgar." Likewise the advocacy of the need for clarification and revision which produced the ERV (1881) and its American counterpart ARV (1901) helped prepare the way for the host of modern translations which were to follow in the twentieth century. In fact it was precisely the widespread feeling that these revisions had failed to fulfil the need they had publicised that encouraged others to try their hand.

In addition to the Tyndale tradition of simplicity and intelligibility in the history of the English Bible, another powerful influence in this direction has been of relatively recent origin. I refer to the manuscript discoveries of Greek papyri at the close of the nineteenth century and the consequent growing conviction that the NT was written, at least in the main, in the vernacular dialect of the market place.

B. THE APPEAL TO NT KOINE AS A MODEL FOR CONTEMPORARY BIBLE TRANSLATORS

The discovery in Egypt of masses of Greek papyri in the early decades of this century, written mainly in the unliterary, spoken Koine, led to the claim that the main feature of NT Greek was that it was the ordinary vernacular Greek of the period. Until then the Greek of the NT stood almost alone as a peculiar form of Greek, perhaps even a special 'dialect of the Holy Spirit'. True, there had been scholars who showed remarkable perceptiveness. Thus in 1863 Bishop Lightfoot referring to a Greek word occurring in the NT but not found in classical literature outside Herodotus (5th century BC) said:

> You are not to suppose that the word had fallen out of use in the interval, only that it had not been used in the books which remain to us; probably it had been part of the common speech all along. I will go further, and say that if we could only recover letters that ordinary people wrote to each other without any thought of being literary, we should have the greatest

---

6 B.F. Westcott, *A General View of the History of the English Bible* (3rd ed. revised by W.A. Wright; New York: Macmillan, 1927) 158

possible help for the understanding of the language of the New Testament generally.[7]

Lightfoot's prophecy was soon to have a remarkable fulfilment. From the 1880s onwards large numbers of the very sort of ordinary letters and documents he referred to have come to light after two millennia in the sands of Egypt. Scraps of papyrus and pieces of pottery recovered from ancient rubbish dumps provide witness to a kind of Greek strikingly similar to the Greek of the NT.

The person responsible for first pointing out the affinity between vernacular Koinē Greek and the NT idiom was the great German scholar, Adolf Deissmann, whose monumental work was translated into English as *Light from the Ancient East.*[8] In Britain the study of the papyri was taken up by some distinguished scholars, outstanding among whom were J.H. Moulton and G. Milligan, joint editors of *The Vocabulary of the Greek Testament,* a work in which the lexical information supplied by these papyri and other non-literary sources is arranged alphabetically.

The wonder that divine revelation should come via the language of the common man was something which gripped the imagination, and perhaps suited the spirit of the age—'the Age of Common Man'.

Adolf Deissmann argued 'that the old literary style of classical Attic differed markedly from the New Testament style in its elaborate and cultivated refinement', whereas in the New Testament 'the underground stream of the people's language springs up powerfully into the daylight'. This prevented Christianity from becoming 'a privileged esoteric affair of a small and exclusive upper class'.[9]

Deissmann continued, 'Jesus spoke of the light and the candlestick, of the city on the hill, of father and child, bread and fish, egg and scorpion, of asking and giving, of seed and crop, of hunger and thirst. No long sentences, no speculative questions, transparent, pithy, plastic...The Gospel, because it was the message of God to humanity could only reveal itself in the simplest of garments...Whoever has eyes to see can learn much from the linguistic facts which meet us in the New Testament. The linguistic estimation of the New Testament shows us that our Holy Book in its classical, creative period is in close contact with the middle and lower classes and in

---

7 quoted by J.H. Moulton in *A Grammar of NT Greek, 1 Prolegomena* (Edinburgh: T&T Clark, 1908) 242

8 A. Deissmann, *Licht vom Osten,* Tübingen: Mohr, 1908 translated as *Light from the Ancient East* by L.R.M. Strachan this edition (New York: Harper, 1927)

9 A. Deissmann, *The New Testament in the Light of Modern Research: The Haskell Lectures, 1929,* (Garden City, NY: Doubleday, Doran & Co Inc., 1929) 80

sharp contrast to the old artificial Atticistic culture which struggled for a new lease of life in the surrounding world. Had the Gospel leagued itself with this ancient culture from the beginning it would have endangered what is best in it, and, especially, its future as a message to humanity would have been impossible.'[10]

Nida himself, who received his Master's degree in Greek New Testament in 1939 (before taking up studies in linguistics under Charles C. Fries at the University of Michigan) was clearly inspired by this perspective:

> Putting eternal truths in the speech of everyday life reflects exactly the style of the Greek New Testament. The New Testament books were not written in the high flown Asian style of the school masters of the first and second centuries A.D.; they were couched in words of the common people, who were seeking the truth about the living, risen Christ. For those who sought life, the dead forms of outmoded grammatical styles were useless.[11]

This view of NT Greek was also assumed by Nida's former colleague and distinguished linguist, Kenneth L. Pike. (They worked together for some twenty years as principal teachers at the Summer Institute of Linguistics where Nida taught the morphology-syntax strand while Pike took the phonetics-phonemics). Expounding "Axioms concerning the Language of Scripture" Pike writes:

> It is observed empirically—by linguistic methods—that the language of the Scriptures is natural language. One cannot differentiate the Greek used in the NT from the language of the man in the street. It is ordinary language, spoken by ordinary linguistic rules such as those studied at the Summer Institute of Linguistics by persons preparing to analyze unwritten languages.[12]

However, few scholars, now, would give unqualified assent to this view of the nature of NT Greek. Few would be so bold in the use of the word 'natural' or equate it with "the language of the man in the street"—the view that encouraged Nida and other DE practitioners to promote common language Bible translations for which 'Koine, the common Greek of the writers and the receptors of the NT writings, presents not only the content but the model'.[13]

---

10 A. Deissmann, *The New Testament in the Light of Modern Research: The Haskell Lectures, 1929*, (Garden City, NY: Doubleday, Doran & Co Inc., 1929) 94, 105-106.

11 E.A.Nida, *Good News for Everyone: How to Use the Good News Bible* (Waco: Word Books, 1977) 19

12 K.L. Pike, 'The Linguist and Axioms Concerning the Language of Scripture', *Interchange*, 3:2, (1971) 77

13 G. Schulze, *Effective Impact in Dynamic Equivalence Translation with Special Reference to the Imbabura New Testament* (PhD dissertation for Fuller Theological Seminary; Pasadena, 1979) 38

In fairness to Deissmann, we need to recognise that he published his findings over against an overwhelming Hebraist position that had held sway from the sixteenth to the nineteenth centuries. Moreover, as Silva has pointed out Deissmann himself acknowledged that he had overstated the facts in the original excitement of discovery. He never denied semitic features. Rather his concern was to show that Semitisms do not place the Bible outside the scope of Greek philology; they are merely birthmarks.[14]

Here we can do no more than trace the gradual modification of Deissmann's thesis and the subsequent revival of the assumption of the existence of a special dialect of Jewish Greek. As early as 1933 Professor A.P. Nock of Harvard was writing:

> Any man who knows his classical Greek authors and then looks into the papyri is astonished at the similarities he finds. Any man who knows the papyri first and then turns to Paul is astonished at the difference.[15]

A British scholar, E.K. Simpson, was to be more specific—though his own English style does not encourage confidence in his objectivity:

> In recent years we have been flooded with testifications to the vernacularity of the New Testament; so much indeed that methinks the balance needs to be somewhat redressed. Unquestionably we owe a debt to the Egyptian papyri and inscriptional lore that cannot be ignored. They have shed light on many incidental points in the sacred text and supplied parallels to many anomalous grammatical forms. When we wish to ascertain the exact sense of *logia* or *apographē,* or of a phrase like *synairein logon* (Mt 18:25), 'to square accounts', or *hoi anastatountes hymas* (Gal 5:12), 'your upsetters', the papyri stand us in good stead. They illustrate the language of the market place or the courts of law, wherever such aspects of life crop out in the Gospels or Epistles. *Ti skylleis ton didaskalon?* (Mark 5:35), 'Why do you bother the teacher?' matches with the lips in which the sentence is placed. It tallies perfectly with its popular environment, and, needless to say, can be plentifully parallelled from the papyri, so large a proportion of which are scribbled waste-papers, which betray by their mis-spellings the hand of illiterate scrawlers. As long as Scriptural writers hug the coast of mundane affairs, the Egyptian pharos yields a measure of illumination to their track, but when they launch out into the deeps of divine counsels, we no longer profit by its twinkling cross-lights.[16]

Other writers[17] have joined Simpson in pointing out that there are wide differences in style within the NT, and that one must not exaggerate the extent to which NT Greek resembles the idioms of the vernacular papyri as was done by earlier writers impressed

---

14 Silva, M, 'Bilingualism and the Character of Palestinian Greek', *Bib* 61 (1980) 200.

15 A.D. Nock, 'The Vocabulary of the New Testament', *JBL* 52 (1933) 138

16 E.K. Simpson, *Words Worth Weighing in the Greek New Testament* (London: Tyndale Press 1944) 6

17 B.F.C. Atkinson, *The Greek Language* (London: Faber and Faber, 1931)280f.; C.F.D. Moule, *An Idiom-book of New Testament Greek,* (2nd ed; Cambridge: Cambridge University Press, 1959) 1-4; N. Turner, 'The Literary Character of New Testament Greek', *NTS* 20 (1974)107-112

by Deissmann's researches. They have also drawn attention to suggestive parallels in style and diction not only with famous Hellenistic writers such as Polybius, Strabo, Epictetus, Lucian and Plutarch, and the Jewish writers Philo and Josephus, but also with less important writers such as Vettius Valens the astrologer, and Philodemus, the Palestinian rhetorician.

However, it is not so much the parallels with the literary Koine of the Hellenistic writers that is underlined by some modern scholars. It is rather the claim that the Semitic cast of biblical Greek sets it apart from the language of the market place. Thus in 1935 Britain's distinguished biblical scholar, C.H. Dodd, published his *The Bible and the Greeks* in which he provided many examples of the modification of Greek terms through their use in the Septuagint translation of the Jewish Bible. In the 1940s the Swedish scholar Albert Wifstrand was claiming that Luke had modelled his style very clearly on that of the Septuagint. As to the authors of James, 1 Peter and Hebrews, he claimed they had mastered the grammar of Koine Greek as it was written by educated people, but their stylistic home was the edifying language of the Hellenized synagogue.[18] In America Henry Cadbury of Harvard was acknowledging that the Greek of the NT 'is not always a native Greek but a Greek from which another idiom shines through'. He acknowledges the fact of the 'Semitic element' but says 'Today no unanimous appraisal of its source and extent is forthcoming.'[19] His contemporary of the University of Chicago, F.W. Gingrich, claimed that the Greek NT was a landmark in the course of semantic change and instanced a distinctly Christian usage of words like ἀγάπη, πίστις, χάρις, κοινωνία, διαθήκη, δικαιόω, κληρονομία, etc.[20] Metzger of Princeton was more definite still:

> The meaning of many of the richest and most significant words in the New Testament cannot be found in the ordinary Greek dictionary. Instead of going to Athens for help the interpreter must go to Jerusalem for in the pregnant phrase of Albert Ritsch 'the Old Testament is the lexicon of the New Testament'. It is a fact that most of the religious terminology of the New Testament can be understood only as it is read against the background of the Hebrew Old Testament and its Greek translation the Septuagint.[21]

Subsequent research has taken account not only of the vocabulary but more so of the syntax and style of NT Greek. As a result of the writing of British and continental scholars such as G. Johnston, N. Turner, H.S. Gehman, M. Black, P. Katz, J.N.

---

18 A. Wifstrand, 'A Problem concerning the Word Order in the NT', *Studia Theologica* 3 (1949) 172-184

19 H. Cadbury, 'The Vocabulary and Grammar of NT Greek', *TBT* 2:4 (1951) 154

20 F.W. Gingrich, 'The Greek New Testament as a Landmark in the Course of Semantic Change', *JBL* (1954) 189f

21 B.M. Metzger, 'The Language of the New Testament', *The Interpreter's Bible* 7, (New York/Nashville: Abingdon-Cokesbury Press 1951) 51

Sevenster and K. Beyer a consensus was developing that biblical Greek has a character of its own which was imparted to it by Semitic influences. Until recently only the classicist Lars Rydbeck seems to have protested that the reaction against Deissmann and man-in-the-street Greek had swung the pendulum too far in the direction of a 'peculiar language of a peculiar people.'[22] 'The NT texts were written down in Greek and they were understood by Greek speaking pagans in the second century A.D. Still there *is* much to say for a peculiar Jewish tinge to NT Greek'. He appealed for a reappraisal of the evidence from both the Hellenist and Jewish materials and more balanced integration.[23]

G.H.R. Horsley laments that the notion of a special Jewish Greek dialect continues to have widespread influence among Biblical scholars. He cites the example of S. Thompson's SNTS monograph, *The Apocalypse and Semitic Syntax* (Cambridge: 1985).[24]

However, Rydbeck's qualms that the pendulum had swung too far in the direction of a separate Jewish Greek dialect have found recent support in the writings of M.Silva[25] and G.H.R. Horsley[26] both of whom bring a more sophisticated linguistic analysis to bear. They seek to account for the semitic influence in the Greek of the NT writings by reference to bilingualism, both passive and productive, and related phenomena (interference, diglossia, dialect, register etc) as well as the undoubted literary influence of the Septuagint. The whole subject is a fascinating one and I believe their treatment is more convincing than that of those such as Nigel Turner who postulate a separate Jewish Koine dialect. S.E. Porter has provided a helpful anthology of this century's major treatments of the character of the Greek of the NT with a wealth of bibliographical information. His introduction provides the historial context, clarifies the issues to be resolved, and calls for a sounder linguistics approach.[27]

Inevitably there arises the tantalizing question as to what language Jesus and his apostles used in their daily lives. Was is Palestinian Aramaic, Koine Greek or even Hebrew? The question has more significance than the mere satisfactions of pious curiosity. If Jesus spoke Aramaic rather than the Greek of the NT writings then this

---

22 so M. Black, 'The Biblical Languages', *Cambridge History of the Bible*, (Cambridge University Press, 1970) 11

23 L. Rydbeck, 'New Testament Greek after Debrunner', *New Testament Studies* 21 (1975) 425

24 G.H.R. Horsley, *New Documents Illustrating Early Christianity* 5, (Sydney: Macquarie University, 1989) 5f.

25 M. Silva, 'Bilingualism and the Character of Palestinian Greek', *Bib* 61 (1980), 198-219.

26 G.H.R. Horsley, *New Documents Illustrating Early Christianity* 5, (Sydney: Macquarie University, 1989)

27 S.E. Porter (ed.) *The Language of the Greek New Testament: Classic Essays*, JSNT Supplement Series 60, (Sheffield: Sheffield Academic Press, 1991).

means that the records we have are already a translation. This may well influence our interpretation of them. Many scholars have adopted this view, so impressed were they by the Semitisms of the Gospels. These include great names such as J. Wellhausen, G. Dalman, C.C. Torrey, C.F. Burney. M.H. Segal, T.W. Manson and M. Black. These have held that Jesus and his disciples normally used Aramaic although they were probably acquainted with Greek and perhaps Hebrew. Black summed up the conclusion of Dalman which he regarded as firmly established: 'Jesus may have spoken Greek, but he certainly did speak and teach in Aramaic.'[28]

Again Dr Nigel Turner who completed the third and fourth volumes of Moulton's *Grammar* took a different view from that of his distinguished predecessor, arguing that Jesus actually spoke a Jewish Greek dialect, a Biblical Greek akin to that of the Septuagint.

> It is not inconceivable that, whatever the language of Jesus, it was influenced by all of those spoken in Galilee at that time, viz. Hebrew, Aramaic, Greek and perhaps Latin. It was biblical Greek, of a kind not very different from the Septuagint—a branch of the Koine, but very different from what we read in the Egyptian rubbish heaps or on the papyrus of more literate people. Since 1949, intense study of vocabulary and syntax seem to me to establish that there was a distinguishable dialect of spoken and written Jewish Greek. That is to say, the biblical language was more than a written product of those whose mother tongue was Semitic and who floundered in Greek because they knew so little of it that they must copy Semitic idioms as they penned it. I am not the first to suggest that the Greek of the Old Testament was a language distinct from the main stream of the Koine, yet fully understood by the Jews. Perhaps as Gehman suggests, those who used this dialect of Greek were bilingual; it may have been a temporary phase in the history of the language, representing a period of transition for those Jews who were passing from a Semitic speaking to a Greek speaking stage, and coinciding with the New Testament period. However, as works of much later date, like the *Testament of Abraham*, exhibit exactly this kind of diction, I do not think it was merely transitional. Certainly it was not artificial. Biblical Greek is so powerful and fluent, it is difficult to believe that those who used it did not have at hand a language all ready for use. This, I submit, was the normal language of Jesus, at least in Galilee—rather a separate dialect of Greek than a form of the Koine, and distinguishable as something parallel to classical, Hellenistic, Koine and Imperial Greek.[29]

Certainly diverse literary and archaeological data have shown the linguistic situation in Palestine to be far more fluid and complex than was previously assumed. The Dead Sea Scrolls show that Jewish scribes sent letters in Aramaic, Hebrew and Greek to the same Jewish leaders from the same Jewish centres. Sevenster concluded that there is no reason to doubt that Jesus could have taught in Greek, particularly in areas such as

---

28 M. Black , *An Aramaic Approach to the Gospels and Acts*, (3rd ed.; Oxford: OUP, 1967) 137

29 N. Turner, *A Grammar of New Testament Greek, 4: Style* (Edinburgh: T & T Clark, 1976) 114, cf. S. Thompson, *The Apocalypse and Semitic Syntax*, (Cambridge: CUP, 1985)

the Decapolis of Transjordan or when he faced Pilate, and that a Palestinian Jewish Christian like James, the brother of the Lord, could write an epistle in good Greek.[30] J.A.T. Robinson went even further by questioning the common assumption that Aramaic-speaking Christianity was prior to Hellenistic Christianity. He suggested that the majority of the early Jewish Christians, whether from Galilee, Jerusalem or the Diaspora spoke (or even most naturally spoke) Greek. 'There is nothing inherently impossible about the notion that both the epistle of James and the first draft of the gospel of John could be very Jewish and very early and were written in Greek.'[31]

Two recent articles, both closely argued and well documented, have re-examined the wider question of the language of Jesus.

Randall Buth concludes:

> Jesus was most probably trilingual. He certainly knew Hebrew and Aramaic (Luke 4:16-20; Mark 5:41). Probably he used Hebrew most of the time for parables, for legal and religious discussions (e.g. Mark 2:1-12), and for daily matters in Judea. Probably he used mainly Aramaic and Greek in daily matters in Galilee. Even in Galilee it appears that His teaching to Jewish audiences would have been in Hebrew, although present evidence is incomplete. His travel to Tyre and Sidon would presuppose ease with Greek.[32]

Jerome A. Lund concludes somewhat more tentatively:

> It appears that Jesus spoke both a dialect of Middle Hebrew and a dialect of Middle Aramaic. He undoubtedly was versed in biblical Hebrew as well. What His home language was is impossible to tell. However, His choice of language depended to a great extent upon His audience. To Judean and Samaritan farmers and villagers and to the Pharisees and sages of Jerusalem, he probably spoke Hebrew. Then, too, He probably spoke a dialect of Middle Aramaic to Eastern diaspora Jews and to Aramaic speaking Jews of the Galilee, like Jairus. He probably used Greek to speak to the Romans and to Western diaspora Jews, but probably not in teaching. The issue of Hebrew versus Aramaic in the Galilee in the first century is far from settled...[33]

Needless to say our concern is with the written language of the NT documents and not with what lies behind them. Of this we can say that the Greek shows the same diversity and varying quality as that in the books that make up the LXX. The NT documents represent an established corpus that can be subjected to linguistic analysis in their own right; yet they are clearly related to a wider group of Hellenistic Greek texts of the first century AD. Like the papyri, ostraca and inscriptions from Egypt which

---

30 J.N. Sevenster, *Do You Know Greek?*, (Leiden: EJ Brill, 1968) 190

31 J.A.T. Robinson, *Redating the New Testament*, (London: SCM, 1976) 364-7

32 R. Buth, 'Language Use in the First Century: The Place of Spoken Hebrew in a Trilingual Society', *Journal of Translation and Texlinguistics* 5:4 (1992) 310

33 J.A. Lund, 'The Language of Jesus', *Mishkan* 17-18 (2/1992-1/1993) 149

were subject to bilingual interference (e.g. from Coptic, and possibly Hebrew), so biblical Greek often has a Semitic flavour, adopts Semitic modes of expression and reflects some Semitic interference in such things as word order, style and to a lesser extent, grammar. Most of the morphological and syntactical peculiarities of LXX Greek are to be found in the NT. But the clearest examples of Semitic influence are probably found in the vocabulary. We shall look at examples of this in the next chapter.

Clearly the final word on the nature of the Greek of the NT has not yet been spoken. Suffice it to say that while there is no denying the widespread presence of Semitic features, the evidence falls short of supporting the notion of a special Jewish dialect of Greek. Future research must keep abreast of developments in linguistics. Silva's utilization of recent studies in bilingualism may go some way to resolving the earlier controversy. Silva has suggested the Semitisms in the NT generally affect style or *parole* rather than grammatical structure or *langue*, to use Saussure's distinction. Another factor that warrants more attention in language choice is **register.** Register refers to the type of language chosen in relation to the wider social role being played by the performer at the moment of utterance i.e. what a person is speaking or writing, determined by what he is doing at the time.[34] Porter has made the practical suggestion of distinguishing three kinds of Semiticisms: instances of clear translation (e.g. Mark 15:34); instances of intervention when a Greek form must be attributed to the influence of a Semitic construction; and instances of enhancements when what rarely occurs in Greek is found frequently (e.g. the adjectival attributive genitive in Romans 8:21). On the broader canvas he has drawn attention to the need for more consideration of the place of **literacy** in the ancient world.[35]

C. THE ROLE OF THE GREEK SEPTUAGINT TRANSLATION

It has long been a commonplace that Luke, the main writer of the NT (in terms of length), together with the writer to the Hebrews, is steeped in the Septuagint.[36] Turner has boldly claimed a more extensive influence—'the style of Mark recalls parts of the Septuagint', the Gospel of John 'is directly influenced by the Septuagint'; the Greek of the Pauline letters is Jewish, 'much influenced by the Septuagint'; 'I Peter is firmly

---

34 M.A.K. Halliday, 'Categories of the Theory of Grammar', *Word* 17:3 (1961) 241-292 and M.A.K. Halliday, *Language as Social Semiotic*, (London: Edward Arnold, 1978).

35 S.E. Porter (ed.), *The Language of the Greek New Testament: Classic Essays*, (JSNT Supplement Series 60) (Sheffield: Sheffield Academic Press, 1991) 35-37.

36 J.N. Birdsall, 'Language of the New Testament', and 'New Testament Text and Versions', *NBD* (1962) 714; F.F. Bruce, *The Books and the Parchments*, 3rd ed. (London: Pickering & Inglis, 1971) 154; L. Rydbeck, 'What happened to NT Greek after Albert Debrunner?', *NTS* 21 (1975) 427

Septuagintal and Semitic despite the likely efforts of a lettered amanuensis'; 'II Peter is more Semitic in style' (than Jude), 'more patently influenced by the Septuagint, and a degree more pompous.'[37]

But the Septuagint influenced the NT at other levels. Many of the terms used (and sometimes created) by the LXX translators became part and parcel of the language of the NT. Furthermore the NT quotes the LXX frequently and some of its theological arguments are based on the wording of LXX passages.[38] Accordingly in view of the significant influence on the NT writings that the Septuagint is commonly assumed to have had, we shall consider it briefly.

The Septuagint is the earliest written translation of the OT, made in the third and second centuries BC. It was primarily intended to meet the needs of the millions of Greek speaking Jews of the Dispersion. Acts 2 provides a list of countries represented by pilgrims to Jerusalem for the Feast of Pentecost and reminds us that in the century before the birth of Jesus, the Jewish diaspora extended from the west coast of India to the south coast of Gaul and probably to the major ports in Spain. There were possibly a million Jews in Egypt alone[39] and it was in Alexandria, the great commercial and cultural capital (where two out of the five wards were known as Jewish districts), that the Septuagint translation was made.

The history of the translation is obscure. Different ancient sources mention 72, 70 or 5 translators of the Pentateuch, though the main tradition of its origin is preserved in the *Letter of Aristeas* (100 BC).[40] This document purports to have been written over a century and a half earlier by Aristeas, an official at the court of King Ptolemy Philadelphus of Egypt (285-246 BC) to his brother Philocrates. Ptolemy was renowned as a patron of literature and it was under him that the great library at Alexandria, one of the world's cultural wonders for 900 years, was inaugurated. The letter describes how Demetrius of Phalerum, said to have been Ptolemy's librarian, aroused the king's interest in the Jewish Law and advised him to send a delegation to the High Priest, Eleazar, at Jerusalem. The High Priest chose as translators six elders from each of the twelve tribes of Israel and sent them to Alexandria, along with an accurate and beautiful parchment of the Torah. The elders were royally dined and wined and proved their wisdom in debate, then they took up their residence in a house on the island of Pharos (of lighthouse fame) where, in 72 days, they completed their

---

37 N. Turner, *A Grammar of New Testament Greek,Vol.4: Style* (Edinburgh: T&T Clark 1976) 2-4

38 E. Tov, 'The Septuagint', *Mikra* , (Philadelphia: Fortress Press, 1988) 163

39 Jeremiah 41-44 records how many inhabitants of Judah fled to Egypt after Nebuchadnezzar's destruction of Jerusalem in 587 BC. Ptolemy I, heir to Alexander's empire in Egypt, was to settle many more garrisons there.

40 See M. Hadas, *Aristeas to Philocrates*, (New York and London: Harper and Row, 1951).

task of translating the Pentateuch into Greek, presenting an agreed version, as the result of conference and comparison. It is plausible that the kernel of the legend has a historical basis. The Ptolemaic kings and their learned men were known to have shown great interest in foreign cultures and could well have commissioned a translation of the law. There is no need to doubt that it was made in Alexandria and that it was begun in the third century BC.

From at least the time of Ezra (450 BC) it had been customary to translate into Aramaic the portions of the Hebrew Scriptures read in public.[41] Actually these Aramaic *Targums* were oral interpretations rather than translations and were not at first written down. They gave the official view of what the sacred text meant and were intended to be used together with it.[42] Some scholars, such as the late Paul Kahle, think that the Septuagint began in the same way, as an oral explanation accompanying the public recitation of the Hebrew text in the synagogues. Others such as Tov find no evidence for comparison with the Aramaic Targums.

The Contents of the Septuagint

The canon of the Septuagint contains three types of books: a) a Greek translation of the 24 canonical books of the Hebrew Bible; b) a Greek translation of the books not included in the Hebrew canon; c) books written in Greek such as the Wisdom of Solomon and the additions to Daniel and Esther.

The latter two groups together form the so-called "Apocrypha" (Greek plural adjective "hidden"). Following Jerome the term was applied in a pejorative sense to the 15 documents found in the Greek and Latin Bibles but not in the Hebrew. The Western church in general rejected Jerome's championship of the Hebrew Canon of the OT and affirmed a Canon of the OT based on the LXX. The Protestant reformers of the sixteenth century revived the view of Jerome and segregated out the "Apocryphal" books.[43]

The Septuagint canon is arranged differently from the Hebrew canon. While the Hebrew books are arranged in three groups reflecting different stages of the process of canonization, the books of the Greek Bible are arranged according to their literary character: a) Pentateuch and Historical Books; b) Poetical and Wisdom Books; c) Prophetic books.

---

41 S. Olaffson, *The LXX Version: A Guide to the Translation Technique of the Septuagint*, (CB (OT Series) (Stockholm: Almqvist and Wiksell, 1991).

42 C. Rabin, 'Cultural Aspects of Bible Translation', *Babel*, 18:3 (1972) 16

43 The Ethiopian version of the OT, however, contains two books, Jubilees and Enoch, not found in either the Hebrew or Greek canons.

Within each group the sequence of books differs from that of the Hebrew canon.

The names of many of the books of the LXX differ from their counterparts in the Hebrew Bible, but they, too, do reflect early Jewish traditions. For example, the Greek name of the fourth book of the Pentateuch, Ἀριθμοι 'Numbers', has its counterpart in the Mishna and Talmud.

The Language of the LXX

The language of the LXX is not straightforward Koine Greek. At its most idiomatic it abounds with Hebraisms; at its worst it has been said to be little more than Hebrew in disguise. The Pentateuch, translated by Jewish translators, is fairly idiomatic and consistent. For the Jews it was the most important of the three divisions of the OT. It was read straight through in the synagogue, sabbath by sabbath, according to a triennial lectionary cycle (whereas only selections from other parts of the OT were read in public). Of the other books, it seems, some were divided between two translators working simultaneously, while others were translated piecemeal at different times by different men using widely different methods and vocabulary. As a result the style varies from fairly good Koine Greek, as in Isaiah, part of Joshua and I Maccabees, to indifferent Greek, as in Chronicles, Psalms, Sira, Judith, the Minor Prophets, Jeremiah, Ezekiel and parts of Kings, to literal and sometimes unintelligible renderings as in Judges, Ruth, Song of Solomon, Lamentations and other parts of Kings.[44]

Nor does quality of translation necessarily coincide with quality of Greek style. The Pentateuch again ranks high. It is a generally competent translation, though as in the *Targums* it occasionally paraphrases anthropomorphisms objectionable to Alexandrian Jews. For example, "Enoch walked with God" (Gen 5:22, 24) appears in the LXX as "Enoch pleased God" (which is quoted in the NT at Hebrews 11:5f). Again, the Hebrew text of Exodus 24:10 says that the elders of Israel "saw the God of Israel", but the Septuagint reads, "they saw the place where the God of Israel stood". Few of the other books are translated as well as the Pentateuch and some, such as Isaiah, are very poor. Esther, Job, Proverbs and I Esdras are free paraphrastic renderings and the original version of Job was much shorter than the Hebrew. The Greek Proverbs contain things not in the MT at all, and Hebrew sentiments are freely altered to suit the Greek outlook. The LXX rendering of Daniel was so free that it was replaced in the first century AD by a later translation. One of the translators of Jeremiah sometimes rendered Hebrew words by Greek words that conveyed similar sound but utterly dissimilar meaning. Of the apocryphal books, as we have seen, some are not translations at all, but free Greek compositions.

---

44 D.W. Gooding, 'Text and Versions', *New Bible Dictionary* , ed. J.D. Douglas, (London: I.V.F.,1962) 1259

There is an interesting example of a DE rendering in the LXX of Judg 12:6 where the Hebrew shibboleth/sibboleth is replaced by the Greek noun στάχυς. The point being that Greek like other languages (but not English) does not distinguish between the sounds /s/ and /sh/.[45]

However, with regard to the language of the LXX generally, Grant and Rowley sum up:

> The general tendency of the LXX translators was to be very literal and they repeatedly followed Hebrew usage (notably in the use of pronouns, prepositions and participial constructions) to an extent which runs entirely counter to the genius of the Greek language.[46]

The Jews themselves were to lose interest in the Septuagint altogether. For from the first century AD onwards, it was adopted by Christian Jews (and subsequently by Gentile Christians) as their version of the OT and they used it freely to support their contention that Jesus was the promised Messiah. We can see this taking place in several NT passages. For example, in Acts 15:16-18, James, presiding over the council of the mother church in Jerusalem, gives his decision that the mission to the Gentiles, as well as to the Jews, should be continued. He cites the prophet Amos to confirm the decision but uses the Septuagint version which gives more explicit support to his argument than the Masoretic Hebrew text. In the Hebrew the role of the Gentiles in the promised restoration of Israel is vague, whereas in the LXX the purpose of that restoration is "that the remnant of men, and all the Gentiles upon whom my name is called, may earnestly seek me, says the Lord" (Amos 9:11-12).[47]

Another reason for subsequent Jewish abandonment of the Septuagint was the establishment of a revised standard Hebrew Bible by Jewish scholars c. 100 AD. This was the beginning of the process of revision and editing which lasted for several centuries culminating in the production of the Masoretic text. Variant forms of the Hebrew text which had existed before 100 AD were allowed to disappear, with the exception of the Samaritan Pentateuch which was preserved outside Jewish circles. As a result of this standardisation of the Hebrew consonantal text it was expected that versions in other languages conform to it. Clearly the existing Greek version did not.

---

45 I owe this example to John Ellington's 'More on 'Shibboleth", *TBT*, 43:2 (1992) 244-245

46 F.C.Grant and H.H. Rowley, *Hastings Dictionary of the Bible*, 2nd ed revised (Edinburgh: T&T Clark, 1963) 348

47 The LXX version quoted by James presupposes Hebrew יִדְרְשׁוּ (will seek) for Masoretic יִירְשׁוּ (will possess) and אָדָם (man) for Edom: and it neglects the particle אֵת the mark of the accusative case, which precedes, שְׁאֵרִית (remnant). But the LXX could represent a variant Hebrew text now lost.

New translations of the Bible into Greek were provided in the second century AD, first by a Jewish proselyte named Aquila, and then towards the end of the century by another proselyte, Theodotion.

Inevitably they revised the translation of Isaiah 7:14, a Septuagint text much used by early Christians as a proof of the virgin birth of Christ. The LXX translation of Hebrew עלמה was παρθένος (a virgin), which was quoted in Matt 1:23. The later Greek versions replaced παρθένος by νεᾶνις (a young woman).[48]

The Significance of the LXX

The Septuagint was one of the great translation enterprises of antiquity. It was the first major translation from an oriental language into Greek and it was the first written translation of the Bible. Biblical scholars prize the Septuagint as a witness to an underlying Hebrew text over a thousand years older than the Masoretic manuscripts. F.F. Bruce gives three convincing examples where the LXX preserved the true text obscured in the (usually more reliable) Hebrew transmissions.[49] But as has been pointed out,[50] a reading in the Greek is no infallible guide to the original Hebrew form. The evidence afforded depends on the translation techniques employed. As we have seen these do not seem to have been uniform. Nevertheless since the recent finds of Hebrew manuscripts at Qumran, the LXX remains, after the MT, the most important complete source for the text of the OT.

Secondly, although this version was intended to meet the needs of Greek speaking Jews, it did incidentally make the OT available to the Gentile world. The Hebraistic style of its Greek could never have been pleasing to a Greek ear, but its contents had their own appeal. That it was known and appreciated in some Greek circles is indicated by allusion to it in pagan authors.[51] "It acts also as a linguistic and theological bridgehead between the Hebrew of the Old Testament and the Greek of the New".[52]

This is of importance for our purpose, namely that the LXX was the Bible of the NT writers and their readers. Every part of the NT shows some knowledge and use of the

---

48 עלמה is in fact strictly 'young woman' and בתולה is the term for virgin in Hebrew. Yet in the OT עלמה, which occurs seven times, does not seem to be used in a markedly different way from בתולה, which occurs fifty times.

49 F.F. Bruce, *The Books and the Parchments*, 3rd ed. (London: Pickering and Inglis, 1971) 157-8

50 J. Barr, *The Typology of Literalism in Ancient Biblical Translations* (MSU 15) (Göttingen: Vandenhoeck und Ruprecht, 1979).

51 F.F. Bruce, *The Books and the Parchments*, 3rd ed. (London: Pickering and Inglis, 1971) 161

52 D.W. Gooding, 'Text and Versions', in *New Bible Dictionary* ed. J.D. Douglas, (London: IVF 1962) 1261

Septuagint and the vast majority of OT citations are drawn from it. As Sidney Jellicoe stated

> For the Greek speaking Jew of the pre-Christian era and over a century beyond, and for the Christian church from the time of its birth, this Jewish-Greek Bible held its place as the inspired Scriptures.[53]

When the NT was complete, they did not jettison the Old, but added the new Greek original to its Greek translation, making one Greek Bible. Thus the NT writers' task of communicating their message in Greek was facilitated by the role of the Septuagint. They did not have to invent a Greek theological vocabulary; such a vocabulary lay ready to hand in the Septuagint. Pagan vocabulary had been taken over by the Alexandrian translators and used as equivalents of the great words of the OT revelation. Thus in Greek speaking Jewish circles these words no longer bore their original pagan significance but acquired new senses in the context of the OT corpus and from the Hebrew vocabulary which they represented.[54]

The Greek word νόμος, usually translated 'law', is an example of a term which acquires a new sense as a result of its use in the Septuagint to translate the Hebrew תורה In non-biblical Greek, νόμος means custom or convention. To the Greeks, in fact, law was codified custom. But in the OT, law is divine instruction mediated through Moses and the prophets. The NT writers inherited and utilised this Septuagint usage.[55]

A similar phenomenon took place with regard to a number of other words including names and titles of divine beings, psychological terms and 'salvation' vocabulary. It is to the last of these that we shall turn in the following chapter because the existence of such technical terminology developed in the LXX, and, deliberately appropriated by the NT writers, has important implications for Bible translation and for our evaluation of DE translations in particular.

Finally, in view of our interest in the kind of language that is appropriate in translations of Scripture we note that this first and immensely significant translation did not employ natural common language. In the course of his magisterial survey of the literature on the LXX translation technique Emanuel Tov comments in passing that in all the

---

53 S. Jellicoe, *The Septuagint and Modern Study*, (Oxford: Clarendon Press 1968) 353

54 F.F. Bruce, *The Books and the Parchments*, 3rd ed. (London: Pickering and Inglis, 1971) 159, D.W. Hill, *Greek Words and Hebrew Meanings: Studies in Semantics of Soteriological Terms*, (Cambridge: Cambridge University Press, 1967) 295; H.M Shires, *Finding the Old Testament in the New*, (Philadelphia: Westminster 1974) 82

55 F.F. Bruce, *The Books and the Parchments*, 3rd ed. (London: Pickering and Inglis, 1971) 159-60

voluminous writings of Eugene Nida, no treatment is found of the translation technique of the Septuagint.[56]

D. CONCLUSION

Nida's theory seeks to do justice to the fact of varieties in languages both with regard to the biblical text itself and the modern languages into which that text has to be translated. In practice, however, it is the latter that predominates in his writings—a feature which is consistent with his emphasis on communication. There is a problem here, which we mention in passing: the notion of group varieties knows no limit. As DE practitioners identify more and more groups of readers, so the number of types of translations must multiply. Thus we have special translations for children and for women, for prisoners, and many other groups. The notion of group varieties reduces ultimately to the language system of the individual—the idiolect.[57] Needless to say this would have immense implications for the believing community and for their liturgy.

However, the concern of this chapter has been rather with the language of the ST, the Bible itself, which by Nida and his associate is assumed to be "natural", "couched in the words of the common people", "the language of the man in the street", with "not even elevated style". The background to this assumption was the dramatic discovery at the end of the nineteenth century of vast numbers of papyri in the sands of Egypt, which proved to be written in Greek strikingly similar at many points to the Greek of the NT. These affinities were well publicised through the research and writings of Adolf Deissmann, J.H. Moulton and G. Milligan and provided a timely caveat to those who were inclined to evaluate the Greek of the NT according to the canons of classical (Attic) grammar. But we have seen that Deissmann's thesis was overstated. Subsequent research has not supported the notion of a unique biblical Greek. In this respect Deissmann (and Moulton) have been vindicated. But the Semitised Greek **style** of the NT has to be conceded.

We have noted too the profound influence of the Septuagint on the Greek of the NT though just how this influence was mediated is not completely clear. Presumably it was a factor in some continuing social process.

---

56 E. Tov, 'The Nature and Study of Translation Technique of the LXX', in C.E. Cox, *LXX: VI Congress of the International Organization for Septuagint and Cognate Studies*, (Atlanta, Georgia: Scholars Press 1987) 339

57 D. Crystal, 'Some Current Trends in Translation Theory', *TBT* 27 (1976) 326

This brings us back to the issue of 'naturalness'. To what extent can we assume that the writers of the NT used language that was natural to themselves, let alone to their receptors, many of whom were Gentiles for whom biblical Greek must have been strange? The deliberately Biblical style of Luke is a case in point.

The truth is that the NT was written in a somewhat Hebraised Greek. Similarly the Bible which so profoundly influenced English culture did not come in natural English. Thus a distinguished advocate of idiomatic translations Mgr Ronald Knox, complained that "there are hundreds and hundreds of Hebraisms which we do not notice, because we have allowed ourselves to grow accustomed to them"[58]—surely a salutary warning to us not to absolutise 'naturalness'.

The same could be said of the DE theory's aversion to technical terminology. The original text was clearly not written on this assumption. The translator is confronted by words which occur only once in the Scriptures, words unattested in extra-biblical literature. He finds in the NT Hebrew loan words which supply the lack of certain technical terms in Greek (e.g. σάββατον). He is confronted by untranslated Hebrew or Aramaic words such as Σαβαώθ in the Rom 9:29 translation of Isaiah 1:9; μαρανα θα in I Cor 16:22, not to mention the more well known examples: μαμωνᾶς, ἀλληλουϊά, ὡσαννά, χερούβ, ῥαββί, Ἐμμανουήλ.

The point is that a language is not a closed circle so uniquely shaped by the history of its speech community as to be totally incomprehensible to an outsider. Nor is it impervious to influence from other cultures.

What about the literary quality of the NT writings? Not every translation of a literary text is necessarily literature. Here we shall be content to recognize the importance of Stylistics for translation theory. Nida, too, would endorse this, and has in fact done so in his later writings.[59] However, the definitive manuals talk about 'the conflict between the dictates of form and content',[60] and describe words as mere vehicles of meaning,[61] thus denigrating the form of the ST and with it the significance of style. Yet style is part of the total meaning of the text.[62]

Applying this to the translation of the NT writings the translator has not only to reproduce the higher literary level of language used in such writings as Hebrews,

---

58 R.A Knox , *On Englishing the Bible*, (London: Burns and Oates, 1949) 8.
59 E.A. Nida, J.P. Louw, A.H. Snyman, and J. Cronje, *Style and Discourse* (Capetown: Bible Society of South Africa, 1983), ii.
60 E.A. Nida, *Toward a Science of Translating*, (Leiden: Brill, 1964) 91
61 E.A. Nida, *Language Structure and Translation*, (Stanford: Stanford University Press, 1975) 91
62 N.E. Enkvist, *Linguistic Stylistics*, (The Hague: Mouton, 1973) 87

James, Luke, Acts and I Peter but also to recognise that even those compositions written in non-literary Greek are not devoid of literary merit. The Bible did not take on literary merit only in the KJV, though it may be true, as has been suggested, that the KJV is a greater literary achievement than the original.[63] Thus in I Corinthians, an epistle in which Paul reminds his readers that his speech has been simple and unadorned, we find some of the most eloquent and moving passages ever written. In fact it has been said that in Rom 8:31-39 and I Cor 13 'the diction of the apostle rises to the heights of Plato in the *Phaedrus*'.[64] The four gospels too, particularly Mark and John, were written in a simple Greek at the level of vocabulary and syntax, but the classicist, E.V. Rieu has drawn attention to their literary art and rhythm, and says this must be reflected in 'the best contemporary English at our command.'[65] Mark has been hailed as an artistic genius who invented the gospel genre.[66] The Book of Revelation has been said to be written in barbarous Greek. But however unnatural the Greek, no-one could doubt the literary impact of the Apocalypse.

The point of the foregoing discussion of the nature of the language of the NT writings has not been to denigrate 'intelligibility' as a worthy aim of Bible translation or to defend the use in our day of such renderings as "Jacob sod pottage"(KJV Gen 25:29). Rather, the aim has been to show that the Greek of the NT cannot be completely identified with the language of the man in the street. Apart from the strange Jewish imagery and thousands of OT allusions, much of the NT is written in a Biblical idiom which must have been quite unnatural and foreign to those who had not been nurtured in the synagogue milieu. This fact should be fully appreciated by translators and help free them from any mistaken subservience to the speech of the market place. In the case of English versions one might also ask why the heritage of Biblical piety and ecclesiastical usage should be excluded from the resources of contemporary English.

However much we might wish to make our version clear and intelligible, the very nature of the original at times will mean the modern reader is sure to strike problems. The first readers of the gospels probably found them just as difficult as we do.[67] Certainly the writer of 2 Peter acknowledged that some of the things written by "our beloved brother Paul...[are] hard to understand, which the ignorant and unstable twist to their own destruction as they do the other Scriptures" (2 Pet 3:16). It is not the job of the Bible translator to simplify the original or to make it easier to understand.

---

63 F.C. Grant, *Translating the Bible*, (Greenwich Conn.: Seabury Press, 1961) 72

64 B.M. Metzger, 'The Language of the New Testament', in *The Interpreter's Bible* VII:43-59 (New York/Nashville: Abingdon-Cokesbury Press, 1951)51

65 E.V. Rieu, 'Translating the Gospels', *TBT*, 6:4 (1955) 155

66 B.M. Metzger, 'The Language of the New Testament', in *The Interpreter's Bible* VII:43-59 (New York/Nashville: Abingdon-Cokesbury Press, 1951)49

67 E.V. Rieu, 'Translating the Gospels', *TBT*, 6:4 (1955) 154

Furthermore, if the modern reader is to be presented with a Bible in common language, he will have been deprived of so much that not only puzzled its first readers but also arrested and challenged them.

CHAPTER THIRTEEN

CONCORDANCE AND TECHNICAL TERMINOLOGY IN DE TRANSLATIONS

The purpose of this chapter is to pursue a second matter that emerged from Chapter 11's examination of the way DE translations deal with the ST. We will consider the issue of 'concordance' and the handling of technical terminology. In order to limit the scope of this section of our investigation, we will undertake a case study. An obvious area to explore is the translation of the sacrifical/cultic terminology that is very common in the Bible, but very foreign—indeed, even repugnant—to most Western minds. It will therefore be a significant litmus test of DE translation in practice

A. BIBLICAL WORD STUDIES AND MODERN SEMANTICS

In the previous chapter we have discussed the significance of the Septuagint as the version of the OT most commonly used by the NT writers and the Christian community of the first centuries. Its influence is seen in over a thousand quotations and several thousand clear allusions; in the Biblical style of some NT writers and in the inherited theological vocabulary that they utilised. It is to the last of these that we shall now turn.

The Jewish writers of the NT did not have to invent a Greek theological vocabulary; such a vocabulary lay ready at hand in the Septuagint. A number of commentators have pointed out how the Alexandrine translators of the LXX took over pagan religious terminology in the translation of the Hebrew Bible with the result that in Greek-speaking Jewish circles these words acquired new significance from the Hebrew vocabulary that they represented or from the new context in which they were set.[1] The opening chapters of C.H. Dodd's *The Bible and the Greeks* contained many examples of the modification of Greek terms through their use in the LXX. Similarly the attention drawn by F.F. Bruce to the Greek word νόμος and the change in connotation it has undergone to translate תורה has been observed in the previous chapter. This connotation has been retained in NT writings.[2]

---

1 C.H. Dodd, *The Bible and the Greeks*, London: Hodder & Stoughton, 1935; L. Morris, *The Apostolic Preaching of the Cross* (London: Tyndale, 1955); D.W. Gooding, 'Text and Versions', in *NBD* ed. J.D. Douglas (London: IVF, 1962); D.W. Hill, *Greek Words and Hebrew Meanings. Studies in Semantics of Soteriological Terms*, (CUP, 1967); H. M. Shires, *Finding the Old Testament in the New* (Philadelphia: Westminster, 1974).

2 F.F. Bruce, *The Books and the Parchments*, 3rd ed revised, (London: Pickering & Inglis , 1971) 159-161; cf. S. Ullman, *Semantics* (Oxford: Blackwell, 1962) 165 (demonstration of the influence of Hebrew on Greek and later on Latin).

A similar phenomenon took place with regard to names and titles of divine beings, as well as words such as 'grace', 'truth', 'life', 'peace', 'salvation' and 'heaven', all of which have a long history in the OT, and to cultic terminology. It is commonly claimed that "almost every key theological word of the New Testament is derived from some Hebrew word that had a long history of use and development in the Old Testament".[3] Thus there has been much investigation of the background of the words of the NT and their roots in the OT. Kittel and Friedrich's nine volume *Theological Dictionary of the New Testament* [4] is the most famous. However, it must be acknowledged that such word studies have not always satisfied those with some training in descriptive linguistics.

In view of the claims being made in this chapter concerning the significance for biblical interpretation and translation of the NT writers' usage of LXX terminology, some brief attention must be given first to modern developments in Semantics as they bear on our topic.

The relevance of semantics to biblical interpretation was demonstrated decisively in 1961 with the publication of James Barr's book, *The Semantics of Biblical Language*.[5] Barr, at that time Professor of OT Literature at the University of Edinburgh, was concerned about unsound linguistic methods prevalent in biblical scholarship. His criticisms, supported by a wealth of examples taken from commentaries, word studies and theological works, focused on faulty lexicography and on the idea that the grammar of a language reflected a people's world-view (in particular what differences of language structure between Greek and Hebrew correlated with the differences in philosophical orientation or personality types found in those cultures). Among the false assumptions he attacked was the view that the word, rather than the sentence or speech-act, constituted the basic unit of meaning to be investigated, and that questions about etymology somehow relate to the real or basic meaning of a word. He advocated the "semantic field" approach associated with the name of Trier. This approach, which Barr utilized in a subsequent book, *Biblical Words for Time*,[6] involves the study, not of one word, but of a group, in which each element can be stated by delimitation against the other; the meaning is the choice of this word against that. Although the study of semantics can be approached from the side of philosophy as well as linguistics, James Barr and subsequent writers who have sought to apply these

---

3 I.H. Marshall, "Culture and the New Testament" (unpublished, 1977b) 13, 16.

4 G. Kittel & G. Friedrich, *Theological Dictionary of the New Testament* , translated & edited by G.W. Bromiley, (Grand Rapids: Wm.B. Eerdmans, 1967-1976).

5 J. Barr, *Semantics of Biblical Language* (Oxford: Oxford University Press, 1961).

6 J. Barr, *Biblical Words for Time* (SBT 33, 2nd ed, London: SCM ,1969)

principles to biblical interpretation (e.g. John Sawyer 1972[7]) have drawn their insights from linguistics, and particularly from the structural approach to language inspired by Ferdinand de Saussure.

Ever keen to make available to exegetes, and to translators especially, the fruits of linguistic developments, Nida himself in conjuction with J.P. Louw has produced *A Greek-English Lexicon of the New Testmanet Based on Semantic Domains.*[8] A companion volume elaborates the methodological approach that lies behind the lexical judgements.[9] Louw and Nida's Lexicon, which was not available to translators of the versions we are investigating, provides definitions and information about a word's field of meaning that is often lacking in other lexicons.

A comparison with the method of a standard Greek Lexicon, such as Arndt and Gingrich,[10] is helpful. For example, for κύριος BAGD divides the range of meaning into two main categories: 1. "Owner" of impersonal possession or of a slave, "master" or "lord". 2. Designation of person of high position - "Lord", - or as a title of respect - "sir". Religious usage indicated Lord used of God, of deified kings, Jesus and other supernatural beings like angels.[11]

In Louw and Nida's Lexicon the range of meanings is listed in the index volume II under the entry, κύριος: Lord, owner, ruler and sir (2:149). The domain reference numbers listed indicate that each meaning comes from a different domain. "Lord" belongs to the domain of words indicating supernatural beings and powers (12:9). The definition in volume I identifies this as a title for God or Christ, indicating 'one who exercises supernatural authority over mankind' (1:139). The second meaning,

---

7 J.F.A. Sawyer, *Semantics in Biblical Research*, (London: SCM, 1972). C.R. Taber, 'Semantics', *The Interpreters Dictionary of the Bible* (Nashville: Abingdon, 1976) 800-7. A.C. Thistleton, 'Semantics and New Testament Interpretation' in New Testament Interpretation: *Essays on Principles and Methods*, ed. I.H. Marshall (Exeter: Paternoster Press, 1977) 75-104. J.P. Louw, *Semantics of New Testament Greek* (Semeia Studies; Philadelphia: Fortress, 1982). M. Silva, *Biblical Words and their Meaning: An Introduction to Lexical Semantics* (Grand Rapids: Zondervan, 1983, revised 1994). P. Cotterell and M. Turner, *Linguistics and Biblical Interpretation*, (Downers Grove: InterVarsity Press, 1989). E.A. Nida and J.P. Louw, *Lexical Semantics of the Greek New Testament* (Atlanta: Scholars Press, 1992). S.E. Porter, *Idioms of the Greek New Testament* (Sheffield: Sheffield Academic Press, 1992). D.A. Campbell, *The Rhetoric of Righteousness in Romans 3:21-26* JSNT Supplement 65 (Sheffield: JSOT Press, 1992).

8 J.P. Louw and E.A. Nida, *A Greek-English Lexicon of the New Testament Based on Semantic Domains* (2 vols) (New York: UBS, 1988).

9 E.A. Nida and J.P. Louw, *Lexical Semantics of the Greek New Testament* (Atlanta: Scholars Press, 1992).

10 W. Bauer, W.F. Arndt, F.W. Gingrich, & F. Danker (abbreviated BAGD), *A Greek Lexicon of the New Testment and Other Early Christian Literature*, 2nd English edition, (Chicago, University of Chicago Press, 1979).

11 W. Bauer, W.F. Arndt, F.W. Gingrich, & F. Danker (abbreviated BAGD), *A Greek Lexicon of the New Testment and Other Early Christian Literature*, 2nd English edition, (Chicago, University of Chicago Press, 1979) 459-461.

"owner", occurs in the domain of words that express ownership or possession (57:12). Here the definition of κύριος is 'one who owns and controls property, including especially servants and slaves, with important supplementary components of high status and respect'; "owner", "master" and "lord" serve as good glosses (1:559). κύριος meaning "ruler" occurs in the group of words used to indicate control or rule and in the subdomain focusing on ruling or governing other people (37:51). When κύριος means "sir" (87:53) it belongs to the domain of words indicating status and the subdomain expressing high status or rank, e.g., a title of respect used in addressing a man - sir, mister (1:739). Volume I provides both the specific domain for each of these meanings and a precise definition of each meaning.

There is much that is creative and helpful in Louw and Nida's Lexicon. But it needs to be used in conjunction with BAGD which provides more extensive reference for each Greek entry, often in fact including every NT occurrence of a word. A theoretical question with regard to Nida and Louw's semantic domains concerns their objective status. To what degree are these categories based on the grammar of the Greek lexicon and to what extent on the linguist's (English) intuitive understanding of the lexical items?

In view of Barr's ruthless criticisms of many of the articles in Kittel's *Theological Dictionary of the New Testament* , one might be tempted to doubt the value of word study altogether. But word study as such is not his target. His real complaint was against what he called 'illegitimate totality transfer'.[12] By this he meant the reading into a word in a particular context of the sum total of the semantic values that it has in all its occurrences. Thus he takes the word ἐκκλησία (church) and considers its meaning on the basis of various usages in the NT. Preachers and writers expound the word as meaning "the Christian assembly", "the body of Christ", "the Bride of Christ", "the first instalment of the Kingdom", etc. There may be a sense in which this is the 'meaning' of ἐκκλησία but all these meanings drawn from different contexts cannot be lumped together and assume to be the meaning of ἐκκλησία in each of its particular occurrences, e.g. in Matt 16:18. Barr successfully demonstrates that in a number of articles in Kittel's Dictionary[13] it is erroneously assumed that words carry with them all the meanings which they may have in other sets of co-occurrences.[14]

---

12 J. Barr, *Semantics of Biblical Language* (Oxford: Oxford University Press, 1961) 218.

13 G. Kittel & G. Friedrich, *Theological Dictionary of the New Testament* , translated & edited by G.W. Bromiley, Grand Rapids: Wm.B. Eerdmans, 1967-76.

14 cf. E.A. Nida, 'Implications of Contemporary Linguistics for Biblical Scholarship', *JBL* 91 (1972) 86.

Word studies as such are not to be dismissed as valueless. 'There is usually in each word a hard core of meaning which is relatively stable and can only be modified by the context within certain limits.'[15]

R.H. Robins wisely observed that words may be convenient units about which to state meanings 'provided that it is borne in mind that words have meaning by virtue of their employment in sentences...and that the meaning of a sentence is not to be thought of as a sort of summation of the meanings of its component words taken individually.'[16] Much, too, inevitably depends on the type of words that we have in mind. Words normally have a number of different senses and it is the context which makes clear which sense is uppermost in a particular occurrence. Most words have a 'primary' sense that comes to the mind of native speakers when they hear it in isolation. It is the sense least conditioned by the context. What the translator has to keep in mind, however, is that the senses which a word has in one language seldom match the senses of the 'equivalent' word in another language. Even when the primary sense matches, different words may have to be used to express the 'secondary' senses. However, there are some words which seem to have only one (e.g. "Messiah"), or at least a relatively stable conceptual nucleus. Cultic terminology of the type we shall be discussing would be in this category.

As we turn to examine the selected cultic terminology, the lessons of modern linguistics must be kept in mind. Full justice must be done to the *context* in which the terms are used, both the immediate linguistic environment as well as the wider literary context—in this case the whole biblical corpus. Linguistics would further stress the importance of the non-verbal context, that is the historical situation in which a term has been understood. In the case of biblical literature one could imaginatively reconstruct a bewildering number of situational contexts of particular literary units. One could read certain Psalms in the light of original Enthronement Of Yahweh Festivals or in the context of the liturgical religious communities that have read, sung, listened to, or studied them, up to the present time. One of the refreshing new trends in biblical research is to examine the later historical contexts, and 'corruptions' of the text with the same objectivity and enthusiasm as the postulated 'original' situational context in Israel's life. The biblical text is seen as the result of a cumulative process possibly involving many layers of tradition. The semanticist (translator, commentator or lexicographer) can 'freeze' the process and describe the meaning of the text in whichever period he chooses. The essential thing is that he makes it clear at the outset exactly what he is doing. It is one of the benefits of recent approaches to biblical

---

15 S. Ullman, *Semantics*, (Oxford: Blackwell, 1962) 49.
16 R.H. Robins, *General Linguistics*, (London: Longmans 1964) 22.

interpretation that they take seriously the final form of the biblical text as a valid linguistic environment on the basis of which semantic statements can be made. Accordingly, we shall be commenting on the biblical text in its final form without delving into possible *Sitze im Leben* of particular passages unless these are explicitly described by the text itself.

Furthermore, in any semantic statements the priority of synchronic description must be observed. As James Barr said with reference to diachronic studies, 'The main point is that the etymology of a word is not a statement about its meaning but about its history.'[17] Nor does one have to be a linguist to recognise that language, including biblical languages, has a history and that words change their meanings. This is even true of the Hebrew text of the OT which was written down over a number of centuries. Thus we read in 1 Sam 9:9 that רֹאֶה (seer) is an archaic form subsequently replaced by נָבִיא (prophet). Again in 2 Sam 5:20 David can use בַּעַל in the place name *Baal-perazim* in its meaning of 'lord', but by the time of the later prophet Hosea, the term had become so associated with idolatry as to be taboo among the redeemed Israel (Hos 2:16, 17). On the other hand, one does not have to be such a relativist as to deny the possibility of continuity throughout history. This is particularly important when one considers the literary and poetic use of language, where usage is more self conscious than in ordinary speech and writing. Poets or novelists hardly ever write spontaneously. Their use of language is normally accompanied by a certain amount of reflection on language itself.[18]

Furthermore there are cases where the etymology of a word is not just a fascinating distraction but an important part of semantic description. A word no longer in use in any living language, not attested in enough contexts to make synchronic description possible, and not occurring in a bilingual text, cannot be described in any other way.[19] Barr criticized preachers who exploit the etymology of a word for homiletic purposes, not least where too much is read into dead metaphors. For instance, the Greek verb σπλαγχνίζομαι 'to show compassion' is said to be particularly powerful because σπλάγχνα means 'internal organs'. But in the Gospels the Greek metaphor probably no longer had any more force than our English verb 'to lose heart'. Another favourite of preachers is the Greek word ὑπηρέτης (literally, the under-rower of a ship) which probably simply means 'assistant' or 'servant' when Paul says, "This is how one should regard us, as servants of Christ" (1 Cor 4:1). Occasionally someone uses diachronic investigation in a way that leads to sheer anachronism, as when we are told that μαρτύριον (witness) has the basic meaning of 'martyrdom', or worse still,

---

17 J. Barr, *Semantics of Biblical Language* (Oxford: Oxford University Press, 1961) 109.
18 B. Siertsema, 'Language and World View', *TBT* 20 (1969) 8.
19 J.F.A. Sawyer, *Semantics in Biblical Research*, (London: SCM, 1972) 90.

that δύναμις in the NT properly means 'dynamite'![20] I would suggest that Nida himself is guilty of imaginative etymologizing when he translates εὐαγγέλιον (gospel), as 'good news'. This is a popular interpretation influenced by the etymology of our English word 'gospel', but it is difficult to defend it on the basis of synchronic description within the context of the NT writings themselves.[21] Yet the GNB translates εὐαγγέλιον by 'good news' even in Rev 14:6, where its context is "Fear God and give him glory, for the hour of his judgement has come".

However, these popular misuses of etymology, rightly scorned by linguists, should alert us to the possibility that such self-conscious use of language, and etymology in particular, may be found in ancient texts, too. In the case of biblical Hebrew, Sawyer has drawn attention to the possibility that a distinctive type of morphological motivation operates due to the structure of the language. He points to the relatively small number of morphological patterns; the remarkable stability of the transconsonantal root; the consonantal script and the frequency of folk etymologies, as reason to allow for etymological motivation more developed than in the Indo-European languages.[22] The suggestion is worthy of further investigation. Certainly Paul, writing in Greek, exploits the Hebrew etymology of 'Jew' when he says in Rom 2:29, "He is a Jew who is one inwardly...His praise is not from men but from God".

With the above caveat we are prepared to observe the warnings of writers such as Barr. In the study of our chosen terminology any historical information must be subsidiary to a synchronic study of the contexts where the terms under discussion occur.

B. CONCORDANCE IN TRANSLATION

DE translation theory emphasises that contextual consistency has priority over verbal consistency or word-for-word concordance.[23] Since in different languages the semantic areas of corresponding words are not identical, it is inevitable that the choice of the right word in the RL text to translate a word in the ST depends more on context than verbal consistency.[24] Nida's favourite example is the Greek word σάρξ which in the FC translations is consistently rendered "flesh"—a translation which he says

---

20 A.C. Thiselton, 'Semantics and New Testament Interpretation', in *New Testament Interpretation*, ed. I.H. Marshall (Exeter: Paternoster Press, 1977) 81.

21 See the previous discussion of this point in Chapter 11 (p.157f).

22 J.F.A. Sawyer, *Semantics in Biblical Research*, (London: SCM, 1972) 50.

23 E.A. Nida and C.R. Taber, *The Theory and Practice of Translation*, (Helps for Translators, No.8; Leiden: Brill, 1969) 14-22.

24 E.A. Nida and C.R. Taber, *The Theory and Practice of Translation*, (Helps for Translators, No.8; Leiden: Brill, 1969) 15.

distorts the meaning for it does not express the intended sense in each context.[25] Therefore, following Nida, the GNB translated σάρξ by various terms, e.g. "men" (Acts 2:17, 2 Cor 7:5), "people of my own race" (Rom 11:4), "human nature" (Rom 8:3), "world/worldly" (2 Cor 10:3), "human point of view" (1 Cor 1:26).

As we have seen, the issue is an old one. The translators of the KJV state quite openly their decision, 'We have not tied ourselves to uniformity of phrasing or to an identity of words'. At the time of the preparation of the ERV, the problem was discussed at length and in a book entitled *The Revision of the English Version of the New Testament*[26] Bishop Lightfoot accused the KJV translators of two groups of errors stemming from their espousal of the approach quoted above. In the first place he claimed that various renderings of the same word or words introduced artificial distinctions having no place in the original. In the second place he accused them of obliterating real distinctions by the same rendering of different words.

Some clarification of terminology is in order .[27]

First of all two types of concordance must be distinguished: one relating to concordance within an original text; the other between an original text and its translation. The first refers to the repeated use of the same word or expression to refer to the same specific thing or concept. Beekman and Callow draw attention, however, to 'pseudo-concordance', by which they mean the re-occurrence of the same word but with different senses.

> Distribution of semantic components into word class or system will differ between languages, and the range of variability of semantic usages of a word in different contexts differs radically preventing a one-to-one matching of word-to-word in each of several contexts across two languages.[28]

Thus English assigns at least two meanings to the word 'table'— a kind of furniture, and a different sense in a table of contents. It is conceivable that both usages occur in the same paragraph but we would not expect to find matching translations for both meanings. This is an example of polysemy[29] and hence pseudo-concordance. If we then translate these two senses of 'table' into Bahasa Indonesia as *meja* and *daftar*

---

25 E.A. Nida and C.R. Taber, *The Theory and Practice of Translation*, (Helps for Translators, No.8; Leiden: Brill, 1969) 16 cf. E.A. Nida, *Good News for Everyone: How to Use the Good News Bible*, (Waco: Word Books 1977) 188.

26 J.B. Lightfoot, *The Revision of the English Version of the New Testament* (London 1873).

27 The following treatment owes much to the helpful discussion of "concordance" by J. Beekman and J. Callow, *Translating the Word of God*, (Grand Rapids, Zondervan, 1974).

28 J. Beekman and J. Callow, *Translating the Word of God*, (Grand Rapids, Zondervan, 1974) 131.

29 S. Ullman, *Semantics*, (Oxford: Blackwell, 1962) 164; G. Leech, *Semantics*, (London: Penguin Books, 1974) 228.

respectively there has been no loss in meaning unless the original text involved a pun (as, for instance, in Amos 8:1 "the basket of summer fruit" which signals "the end" in Hebrew). The loss, if it may be called such, is in the terms of structure of the English lexicon, something that is language specific and arbitrary. The translator should not attempt to reproduce such pseudo-concordance in the RL.

Where an original text exhibits deliberate re-occurrence of the same word with the same sense then this represents real concordance which the translator should seek to reproduce in the RL. Beekman and Callow cite 1 Corinthians 13, where Paul uses the Greek word ἀγάπη (love) no less than eight times to keep his topic in focus and reinforce his theme. This then, is a linguistic feature of form that the translator should seek to carry over into the RL version. More important for our purpose, in view of the subsequent focus on the translation of cultic terminology, is their advocacy of concordant translation of the word 'blood' in the Bible because of the deliberate allusion to OT sacrifices. In apparent criticism of the GNB, they say, 'To translate this symbol 'blood' simply as 'death' loses or at least obscures this designed concordance.'[30]

Sometimes there are, however, problems in maintaining real concordance. If, for instance, the metaphor 'blood' was felt to be misleading in the RL (but this is not the case in English), then the problem could be overcome by using the word 'blood' and 'to die' in a clause. Inevitably difficulties in the lexical structure of languages pose problems which result in either a reduction or gain in the internal concordance of the translation as compared to that of the ST. Beekman and Callow cite Ephesians 4:32 as causing problems in one of the Otomi languages of Mexico. i.e. "Forgive one another as God for Christ's sake has forgiven you". The Greek original, like English, is able to use the same word 'to forgive' in both cases, i.e. χαρίζομαι but in this Otomi language it is unthinkable that the same word could be used of human forgiving and divine forgiving. The same problem exists in Bahasa Indonesia, and earlier Indonesian versions of the Bible were careful to distinguish between *memaafkan* (human forgiving) and *mengampuni* (divine forgiving). However, of three versions in current use, two translate χαρίζομαι by *mengampuni* in both cases, thus retaining the concordance of the ST. It is not clear whether the natural usage is being changed by 'foreign' influence. Whatever the background, it provides another warning to the translator not to slavishly bind himself to what is 'natural'. Languages are not immutable systems and the translation of the Bible can itself be an important influence in language change. A completely concordant translation is impossible. But should

---

30 J. Beekman and J. Callow, *Translating the Word of God*, (Grand Rapids, Zondervan, 1974) 156.

not the translator seek to reproduce the concordance of the ST unless it is intolerable in the RL?

C. A CASE STUDY: THE TRANSLATION OF SACRIFICIAL TERMINOLOGY IN THE NT

Nida reports that when the GNB was published some readers said that they were shocked not to find the word 'propitiation'.[31] This is one of the traditional salvation words found in the KJV, and S.R. Driver[32] claimed that propitiation was one of the three main categories used in the NT to interpret the death of Christ. It is true that generally such theological understandings of the NT writers are borne by sentences rather than by individual words.[33] Thus to assess Driver's claim with regard to propitiation, one would not restrict the investigation to the occurrence of certain terms but rather note the larger discourse units which refer, for instance, to the wrath of God. Nevertheless, we must assert again the particular importance of technical terms which, however strange and difficult to the modern reader, function as signposts pointing to certain religious presuppositions and to a peculiar historical and social background without which the thinking of the NT writers cannot be understood. Since Nida himself has drawn attention to, and defended, the disappearance of 'blood' and 'propitiation' from the DE translation which he commends, it will provide a suitable case study, on the basis of which we hope some general conclusions can be reached about the translation of OT technical terms in the NT.

The terminology under focus is the ἱλάσκεσθαι word group comprising the verb (ἐξ)ἱλάσκομαι and the nouns ἱλασμός and ἱλαστήριον. There are 160 occurrences of these words in the Greek OT (LXX), usually in connection with the sacrificial cultus. There are only six occurrences in the NT (two of each), of which four refer directly to the death of Christ.

Recent English translations, prior to the GNB, had reflected some uncertainty as to whether this terminology was best translated by 'propitiation' or 'expiation'. According to Moulton and Milligan,[34] the ἱλάσκομαι word group in Hellenistic Greek, as in Classical, refers to placating wrath. They interpret ἱλάσκομαι with accusative of the person as 'render propitious to oneself', and go on to note 'a similar use of the compound ἐξιλάσκομαι which extends to the LXX'. Some biblical scholars, however, notably C.H. Dodd, have argued that the notion of propitiation or

---

31 E.A. Nida, 'Translating Means Communication', in *Linguistics and Anthropology* ed. M. Saville-Troike (Washington D.C.: Georgetown University Press, 1977) 73.

32 S.R. Driver, 'Propitiation', *HDB*, IV (Edinburgh: T. & T.Clark, 1902) 132.

33 J. Barr, *Semantics of Biblical Language* (Oxford: Oxford University Press, 1961) 249.

34 J.H. Moulton and G. Milligan, *The Vocabulary of the Greek Testament*, (Edinburgh: T.& T. Clark, 1930) sub ἱλάσκομαι.

appeasement is hardly found in biblical Greek, but rather gives way to an impersonal 'expiation' or 'atonement'.[35] He did not suggest a difference in the action performed. Rather, a difference in intention is signified. Propitiation refers to the placating of an angry party—be it divine or human. Expiation, on the other hand, has in view the removal of an offence or compensation for it. A comparison of pre-1935 and post--1935 Bible translations and commentaries testifies to the tremendous influence of Dodd's thesis. Prior to 1935, 'propitiation' is universally accepted; subsequently 'expiation' becomes the norm. Significantly, Dodd was to become chairman of the NEB NT translation project.

Dodd's conclusions, however, were later challenged by Leon Morris, who argued that in a majority of biblical usages, when the context is consulted it is plain that 'the averting of anger seems to represent a stubborn substratum of meaning from which all other usages can be naturally explained.'[36] James Barr is reluctant to allow that the sacrificial system involved any element of 'appeasement of an angry, offended or arbitrary deity', but concedes that in many contexts 'the anger of God falls on Israel when the sin is not expiated so that expiation has a certain apotropaic aspect; it alone turns away the anger of God... it is therefore difficult to carry out the clear distinction of expiation and propitiation.'[37] A painstaking study by David Hill, *Greek Words and Hebrew Meanings,*[38] gave cautious support to Morris' criticism of Dodd. In a later *Festschrift* to Morris, Howard Marshall claimed that Morris' 'discussion of the meaning of the *hilaskomai* word group in which he demonstrated that it refers to propitiation rather than expiation, has been confirmed by the work of R. Nicole and D. Hill.'[39]

The GNB sidesteps altogether the expiation/propitiation debate by using a phrase such as 'the means by which men's sins are forgiven.' Nida answers the critics, as follows:

> What these persons did not sense was their own misunderstanding of the meaning of "propitiation" which really refers to the process of "making someone favourably inclined toward another". The English term "propitiation" might be described as a highbrow way of talking about arm-twisting, but there is no need for arm-twisting to get God on man's side. It was God who was in Christ reconciling the world to himself; Christ did not have to reconcile God to the world. The Greek noun *hilasmos* and the related verb *hilaskomai* never occur in the New Testament with God as the object, and in 1 John 2:2 it is not the propitiation of sin but the

---

35 C.H. Dodd, *The Bible and the Greeks*, (London: Hodder & Stoughton, 1935) 82.

36 L. Morris, *The Apostolic Preaching of the Cross*, (London: Tyndale Press, 1955) 155.

37 J Barr, 'Propitiation', *HDB*, 2nd ed. [Edinburgh: T & TClark, 1963] 810.

38 D. Hill, *Greek Words and Hebrew Meanings. Studies in Semantics of Soteriological Terms*, (Cambridge: Cambridge University Press; 1967).

39 'The Development of the Concept of Redemption in the New Testament', in *Reconciliation and Hope*, R. Banks, ed., (Exeter: Paternoster Press; 1974) 153.

> expiation of sin which is spoken of. For many readers, however, the term "expiation" would be even more difficult than "propitiation". In fact, both "expiation" and "propitiation", like "justification" and "predestination", are not much more than anglicised Latin. These words exist in dictionaries, but they are only very rarely heard in speech. Hence, if even the phrase "expiation of sins" is to be understood, it is much better rendered in 1 John 2:2 as "And Christ himself is the means by which our sins are forgiven". With the wording the vital message of this important verse becomes crystal clear.[40]

Had Nida been content to argue that in a common language version or in view of the target audience there is no room for such rare and difficult words, one could perhaps accept his position. But that is not his argument at all. Apart from his strange antipathy to English vocabulary with Latin origins, he finds the whole idea of propitiation repugnant, but rather than opt for the equally difficult 'expiation' he advocates a simplified paraphrase that no longer has any contact with the sacrificial cultus whose categories are being used by the NT writers. That 'the vital message now becomes crystal clear' may be true. But to what extent is it the same message?

It is appropriate at this point to provide a brief survey of the linguistic evidence. The ἱλάσκεσθαι word group has a long history of usage in the LXX, the Greek translation of the Hebrew Bible so often quoted by the NT writers, and the version with which the first readers of the NT letters would have been most familiar. These terms are chiefly used as equivalents of the *Pi'el* conjugation of the Hebrew verb כפר and its derivatives. The debate among scholars as to whether כפר originally mean 'cover completely' or 'wipe out' is not relevant for our purposes. Its cultic use denotes the restoration of a relationship between God and man which has been broken by sin, normally through the offering of a sacrifice. Thus God is said to have taken the initiative in providing the means of atonement, e.g. Lev 17:11 "I have given it (the sacrificial blood) to you upon the altar to make atonement (Hebrew לכפר LXX ἐξιλάσκεσθαι) for your souls".

That the LXX translators seemed to have regarded ἐξιλάσκομαι and כפר as virtual equivalents is a useful guide to the meaning of the Greek term. However, the Greek text is worthy of investigation in its own right. This is apparent if we look at those verses where the Greek translators used an ἱλάσκεσθαι form even though no כפר word is found in the underlying Hebrew text. Dodd assumed that propitiation was not intended in these cases. However, closer examination indicates that the translators were governed by ideas expressed in the context rather than merely finding equivalents for particular Hebrew words. Thus in 2 Kgs 24:4 the Hebrew clause reads לסלח

---

40 E.A. Nida, 'Translating Means Communication', in *Linguistics and Anthropology* ed. M. Saville-Troike (Washington D.C.: Georgetown University Press, 1977) 73-4.

ולא־אבה יהוה (The Lord was unwilling to forgive). In the LXX we would expect to find the root סלח translated by a Greek verb such as ἀφίεναι (forgive) or καθαρίζειν (cleanse). Instead the LXX reads οὐκ ἠθέλησεν κύριος ἱλασθῆναι (the Lord refused to be placated). It appears that the Septuagint translator was influenced by the context which concerns God's judgement on Judah for the evil perpetrated by King Manasseh. The same construction is found in Dan 9:19 and Lam 3:43, where again the context of seeking to avoid divine wrath leads to the use of ἱλασθῆναι. Again in Ex 32:14 where the Hebrew says that as a result of Moses' intercession "the Lord repented of the evil that he intended to do to his people", the LXX read καὶ ἱλάσθη, translating the root נחם

Even clearer is the use of ἐξιλάσκεσθαι to translate חלה (mollify) in Zech 7:2 and 8:22 and Mal 1:9. Dodd acknowledged that these are 'unmistakable examples of the ordinary classical and Hellenistic sense of *exilaskesthai* = propitiate',[41] but maintained that because the reference is to non-Israelites they can be allowed little significance. Dodd's argument would carry some weight if the narrative described pagan worship. Instead it is about Gentiles who join the Jewish pilgrims going to Jerusalem.

Another interesting example is found in Ps 106:30, the one occasion where the LXX uses ἐξιλάσκεσθαι to render פלל , a verb which means 'pray' or 'intercede' and which is normally translated προσεύχεσθαι. In this verse the psalmist recalls the incident related in Numbers 25 when Israel 'attached themselves to the Baal of Peor and ate sacrifice offered to the dead they provoked the Lord to anger with their doings and a plague broke out among them. Then Phineas (the priest) stood up and interposed and the plague was stayed' (Ps 106:28-30). As noted above, פלל means no more than intercede, but the Septuagint translator, apparently reflecting on the context, writes down 'Phineas stood up and placated (the Lord)'. The LXX choice of ἐξιλάσκεσθαι was no doubt influenced not only by the general theme of averting God's wrath (Num 25:3-5 records God's command to Moses to 'Take all the chiefs of the people and hang them in the sun before the Lord that the fierce anger of the Lord may turn away from Israel'), but also by the memory of the end of that narrative where the Lord gave Phineas 'the covenant of a perpetual priesthood because he was jealous for his God and *made atonement for the people* of Israel' (Num 25:13 RSV). The Hebrew translated 'made atonement' is כפר and the LXX translation is ἐξιλάσατο used without an object, just as in Ps 106:30 (cf. Eccl 45:23).

We have seen then in these unexpected appearances of ἱλάσκεσθαι or ἐξιλάσκεσθαι in the LXX (viz. Zech 7:2; 8:22; Mal 1:9; Ps 106:30; Eccl 45:23; 2

---

41 C.H. Dodd, *The Bible and the Greeks*, (London Hodder & Stoughton,1935) 355.

Kgs 24:4; Ex 32:14 and 1 Sam 6:3) that the verb seems to be used by the translators with the propitiatory meaning that it bears in non-biblical Greek.

In eighty three out of one hundred and six occurrences in the LXX ἐξιλάσκεσθαι translates the Hebrew root כפר usually in cultic context. The instances in the non-cultic contexts can be rendered 'propitiate'. Some examples are: Prov 16:14: 'The wrath of a king is a messenger of death, but a wise man will appease it' (LXX, ἐξιλάσεται). In Gen 32:21 Jacob thinks that his present will appease Esau's wrath and the LXX renders the words literally ἐξιλάσομαι τὸ πρόσωπον αὐτοῦ ἐν τοῖς δώροις'. Again 2 Sam 21:1-14 describes King David's attempt to get rid of a famine which had been caused by his predecessor's ill treatment of the Gibeonites. David asks them, "What shall I do for you? With what shall I make atonement?" (כפר LXX ἐξιλάσομαι, v.3). It is agreed that the seven sons of Saul be hanged. The passage includes the ideas of propitiating anger and making compensation. In these non-cultic contexts, כפר (and the ἱλάσκομαι form used in the LXX to translate it) regularly bears the meaning to avert punishment by the payment of a כפר (ransom) which may be money or which may be a life.

However, as most occurrences of ἐξιλάσκεσθαι are found as the translation of כפר in cultic contexts where the worshipper expresses his penitence ritually by animal sacrifice, biblical scholars agree that this usage is the most significant for interpreting the terminology of the NT. The ritual of the Day of Atonement (*Yom Kippurim*) described in Leviticus 16 is typical:

> Then the priest shall kill the goat of the sin offering which is for the people, and bring its blood within the veil, and do with its blood as he did with the blood of the bull, sprinkling it upon the mercy seat (ἱλαστήριον) and before the mercy seat; thus he shall make atonement (ἐξιλάσεται) for the holy place, because of the uncleanness of the people of Israel and because of their transgressions. (Lev 16:15-16)

Similar cultic usages can be found in Ex 30:10, 15, 16; Lev 1:4; 4:20, 26, 31, 35; 6:6, 10, 12, 16, 18; 7:7, 30, 37; 8:15, 34; 9:7; 10:17; 12:7, 8; 14:18, 19, 20, 21, 29, 31, 53; 15:15, 30; 16:6, 10, 11, 16, 17, 18, 20, 24, 27, 30, 32, 33, 34; 17:11; 19:22; 23:28; Num 5:8; 6:11; 8:12, 19, 21; 15:25, 28; 16:46, 47; 25:13; 28:22, 30; 29:5, 11; 31:50; 35:33; Deut 21:8; 1 Sam 3:14; 6:3; 1 Chron 6:49; 2 Chron 29:24; 30:19; Neh 10:33; Ps 106:30; Exek 43:20, 22, 26:45:15, 17, 18, 20; Dan 9:24; Zech 7:2. In some contexts the notion of propitiation is particularly strong e.g. Num 16:44-46:

> And the Lord said to Moses and Aaron 'Depart from the midst of this congregation, and I will consume them at once'; and they fell upon their faces. And Moses said to Aaron, 'Take a censor and put on it fire from the altar, and put incense on it, and carry it away quickly into the camp,

> and make atonement for them (Hebrew כפר LXX (17:11) ἐξίλασαι); for wrath is gone forth from the presence of the Lord: it has begun to destroy the people.

However, especially in Leviticus and Ezekiel, it is not obvious whether ideas of propitiation or expiation are foremost. The verb has become a standard technical term which is perhaps best translated 'make atonement'.

Dodd was right to underline the difference between biblical use of ἱλάσκομαι words and the normal Greek association with a capricious and vindictive deity whose arbitrary punishments can only be avoided by appropriate bribes. Both OT and NT alike represent God Himself as taking the initiative in providing the means for restoring the broken relationship between Himself and His people, cf. Lev 17:11, 'I have given it (the sacrificial blood) to you upon the altar to make atonement for you souls', and Rom 3:25, 'Christ, whom God set forth to be a propitiation (ἱλαστήριον) through faith, by his blood'. But clearly, propitiatory connotations have not disappeared. If that had been the intention of the LXX translators or the NT writers after them, it is incredible that they would choose terms which in normal everyday usage were saturated with propitiatory associations. However distasteful to the modern mind, one cannot escape the constant references to the wrath of God in both OT and NT. But the biblical context always makes clear that this is no arbitrary passion of a capricious deity but the stern reaction of a holy God to man's disobedience and evil.

Three other members of the ἱλάσκομαι group must be looked at before we turn to the NT texts. Firstly, ἱλάσκομαι itself (as distinct from the far more common compound verb discussed above) occurs only eleven times in the LXX. The underlying Hebrew is כפר three times, סלח six times and נחם once. There is no corresponding Hebrew verb for the occurrence in Est 13:17. Generally these Hebrew verbs convey meanings such as 'forgive' but as we have already seen (e.g. Ex 32:14) the LXX translators felt free to use an ἱλάσκομαι word if the context warranted it. Thus, in six out of these eleven occurrences, there is explicit mention of wrath (e.g. Ex 32:14; Lam 3:42; Dan 9:19). 2 Kgs 5:18 refers to the incident where Naaman the Syrian asks pardon for bowing down in the pagan temple of Rimmon, i.e. the most heinous of sins in a Jewish context—idolatry.

It has been argued that in the case of Ps 64:4 where 'sins' is in the accusative case, the translation should read 'expiate our sins'. This may be correct. But it is interesting that a number of manuscripts read the dative case. This shows that if the original were an accusative it was regarded as so unusual that some scribes felt constrained to modify it to a dative. Certainly both ἱλάσκομαι and ἐξιλάσκομαι are generally used with

an emphasis on relations between persons, a fact which accords better with a meaning such as propitiate than expiate. The most common construction occurring some sixty times, is περί with the genitive of the person (i.e. to make propitiation concerning a person).

The nouns ἱλασμός and ἐξιλάσμος are used interchangeably some sixteen times in the LXX. Forgiveness is the meaning in Dan 9:8 and Ps 129:4. But it is the cultic usage which prevails in such expressions as 'day of atonement', 'blood of atonement', 'house of atonement' (Num 5:8; Lev 23:27, 28; 1 Chron 20:28; 28:11; Ezek 7:25; 43:23; 45:19). As well as translating כפר it is used to translate the Hebrew word for sin offering (e.g. Amos 8:14; Ezek 44:27; 45:19). In some contexts the propitiatory overtones are very strong (e.g. Dan 9:8; 2 Mac 3:33).

Finally, the noun ἱλαστήριον occurs twenty seven times in the LXX. On twenty one occasions it translates the Hebrew כפרת or mercy seat. This golden slab in the Holy of Holies was held to be the special place of God's presence and it was sprinkled with blood on the Day of Atonement (Lev 16). ἱλαστήριον also occurs five times in Ezekiel's vision of the postexilic temple (Ezek 43), where it denotes a ledge on the sacrificial altar on which blood was to be painted. There is only one non-cultic use of the word, and that is in the apocryphal 4 Maccabees; a book written about 40 AD,[42] a few years before the NT letters were written. Referring to the martyrdom of the seven brothers, the verse (17:22) reads:

> They having as it were become a ransom (ἀντίψυχον) for the nation's sins; and through the blood for these righteous men and the propitiation of their death (τοῦ ἱλαστηρίου τοῦ θανατοῦ αὐτοῦ), the divine providence delivered Israel which had hitherto suffered evil.

The commentary of 2 Maccabees on the same incident (7:33-38) confirms the propitiatory interpretation of the death of the brothers:

> I, like my brothers, give up body and soul for our fathers' laws, calling on God to show favour to our nation soon...and to let the Almighty's wrath, justly fallen on the whole of our nation, end in me and my brothers.

These passages, by the way, were not treated by Dodd because he regarded the LXX books for which there was no available Hebrew original as unsuitable for his comparative methods. His aim was to demonstrate how the Hebrew forced Greek words into a new mould. However, once again, Dodd's methodology can be criticised. The whole range of LXX usage is relevant to the investigation, particularly

---

42 D. Hill, *Greek Words and Hebrew Meanings. Studies in Semantics of Soteriological Terms*, (Cambridge: Cambridge University Press; 1967) 43.

as Dodd was arguing that the usage of the NT authors was determined by the usage of the LXX.

Because Dodd's investigation has proved the point of departure for modern study of the ἱλάσκεσθαι terminology[43] it would be as well to review his methodology before summarizing the conclusions of this discussion of LXX usage. Dodd sought to establish the meaning of ἐξιλάσκομαι and cognates by a threefold method of approach.[44] Firstly, he looked at other Greek terms which translate the Hebrew כפר Secondly, he examined Hebrew verbs other than כפר that are occasionally rendered by ἐξιλάσκομαι. Finally, he looked at ἐξιλάσκομαι as the normal LXX translation of כפר The first approach revealed that כפר is sometimes translated by such variants as ἁγιάζω and καθαρίζω, verbs meaning 'sanctify', 'purify' (persons or ritual objects)—and others, such as 'forgive', 'wipe away'. He then draws the illegitimate conclusion that the LXX translators must have regarded the more common ἱλάσκεσθαι class as conveying similar ideas. Dodd's second line of investigation is threatened by four texts which we have discussed above (namely: Zech 7:2; 8:22; Mal 1:9 and Ps 196:30.), but he concludes that with the exception of these four texts the ἱλάσκομαι group, when translating Hebrew roots other than כפר means 'to cleanse from sin', 'to have mercy' or 'to forgive' with a divine subject. We have suggested above, however, that the LXX translators' unexpected use of ἱλάσκεσθαι (rather than, e.g., καθαρίζω or ἀφίεναι) does not necessarily indicate a modification of its meaning but rather shows they were more influenced by the context with its references to God's wrath than by merely substituting word for word equivalents. Dodd's third approach concludes that where ἐξιλάσκομαι translates כפר as a religious term, it does not have the sense of propitiating the deity but of performing an act whereby guilt or defilement is removed. He gives little weight to the non-cultic occurrences of כפר as he regarded them as being of no consequence for the cultic texts. He has come under fire for this from Hill, who maintains the former are important for discovering the basic meaning of the word.[45] However, Hill, who seems to claim more than Morris did for the significance of non-cultic usage, is on dangerous ground. After all, neither the language of the Hebrew Bible nor the LXX is entirely homogeneous. In defining the meaning of words or phrases one must allow for the possibility of variation according to the style and register being used. By 'register' we mean the variety of language appropriate to a particular social situation.[46] Hence it is theoretically quite possible that ἐξιλάσκομαι conveys strong ideas of

---

43 N. Young, 'C.H. Dodd, "Hilaskesthai' and His Critics', *EQ* 48:2 (1976) 76.

44 C.H. Dodd, *The Bible and the Greeks*, (London: Hodder & Stoughton, 1935) 82f.

45 D. Hill, *Greek Words and Hebrew Meanings. Studies in Semantics of Soteriological Terms*, (Cambridge: Cambridge University Press; 1967) 31.

46 Cf. J.C. Catford, *A Linguistic Theory of Translation* (London: Oxford University Press, 1965) 85; J.F.A. Sawyer, *Semantics in Biblical Research*, (London: SCM, 1972) 17.

appeasement in non-cultic contexts which recede or disappear in its cultic occurrences. From his three lines of enquiry, Dodd concludes:

> Hellenistic Judaism, as represented by the LXX, does not regard the cultus as a means of pacifying the displeasure of the Deity, but as a means of delivering man from sin, and it looks in the last resort to God himself to perform that deliverance, thus evolving a meaning of *hilaskesthai* strange to non-biblical Greek.[47]

He then applies to the NT occurrences the finding of his LXX enquiry, arguing that the rendering 'propitiation' is illegitimate in the NT.

The above discussion has sought to draw attention to some weaknesses in Dodd's methodology, which impair his study. His arguments, drawn from the translation variants (his first two lines of approach) are not legitimate (he is unable to show that they are synonyms). His lexicographical method regularly ignores the context, and so neglects the element of wrath so frequently present.[48]

Hilaskesthai Words in the NT and the Implications for Bible Translation

We can now turn to the six occurrences of ἱλάσκεσθαι words in the NT and their translation.

1) The first, Heb 2:17, is explicitly cultic. It is said that Jesus had to become truly human so that he might become "a merciful and faithful high priest in things pertaining to God (εἰς τὸ ἱλάσκεσθαι) for the sins of the people". Noting that the verb is followed by 'sins' in the accusative case, Bruce comments that:

> the renderings of RSV ("to make expiation for") and NEB ("to expiate") might be justified here because the direct object of the verb is sins (*hamartias*). But if sins require to be expiated, it is because they are committed against someone who ought to be propitiated.[49]

Morris, however, defends the traditional rendering "to make propitiation with regard to the sins of the people", treating it as an accusative of respect. He points out that: (i) although there is no reference to wrath, yet the mention of Jesus as a "merciful high priest" presumes the classical usage, (ii) the phrase "things pertaining to God" (τὰ πρὸς τὸν θεόν) focuses on the Godward aspect of the atonement, (iii) the few occurrences of 'sin' in the accusative form after the verb seem to imply propitiation,

---

47 C.H. Dodd, *The Bible and the Greeks*, (London: Hodder & Stoughton, 1935) 89.

48 L. Morris, *The Apostolic Preaching of the Cross*, (London: Tyndale Press, 1955) 129-36

49 F.F. Bruce, *The Epistle to the Hebrews*, (NICNT) (London: Marshall, Morgan & Scott, 1964) 41 (footnote 57). In the revised edition (Grand Rapids: Eerdmans, 1990) page 78 (footnote 57), Bruce repeat this statement essentially but adds that 'in the Greek Bible ἱλασκομαι is not found with the person propitiated as its object', cf. P. Ellingworth, *Commentary on Hebrews* (Grand Rapids: Eerdmans, 1993) 188.

and (iv) the variant reading (ταῖς ἁμαρτίαις) found in some early manuscripts arose in circles where the peculiarity of the accusative after ἱλάσκομαι was felt.

Rather than press for an interpretation solely in terms of propitiation, perhaps we could be satisfied with the translation of the NIV 'that he might make atonement for the sins of the people', cf. the Jerusalem Bible's 'able to atone for human sins'. Such translations make clear that the work of Christ is being explained in terms of OT sacrificial categories, something which is not at all obvious from the GNB's 'so that people's sins would be forgiven'.

2. This verb ἱλάσκομαι is only found again in the words of the penitent publican in Luke 18:13, ὁ θεός, ἱλάσθητί μοι τῷ ἁμαρτωλῷ, usually translated, 'God be merciful to me a sinner'. The ASV margin has 'Be thou propitiated', but although it could be argued that God's holy reaction to sin is implied, there is no reference to divine wrath and 'be propitiated' or 'be propitious' seems a bit forced. Accordingly, seven of our eight translations represent the words simply as a plea for God's mercy. The GNB substitutes 'pity' for 'mercy' (viz. 'God have pity on me a sinner'). This is not an improvement, as it takes us more into the realm of feelings and emotion rather than attitude.

3. Next we come to the noun ἱλαστήριον in Heb 9:5 and Rom 3:25. The first is a clear-cut reference to the 'mercy seat' which one meets so often in the LXX. The writer to the Hebrews is describing the furnishings and sacrificial arrangements in the sanctuary under the old covenant before going on to demonstrate the superiority of the priesthood and sacrifice of Christ. Above the ark of the covenant, he reminds his readers, were 'the cherubim of glory overshadowing the mercy seat (ἱλαστήριον), of which things we cannot now speak in detail'. Again Bruce's commentary on τὸ ἱλαστήριον is helpful.

> The lid of the ark was a golden slab called the "mercy seat" or place of atonement, viewed by our author as the earthly counterpart of the "throne of grace" to which he has already exhorted his readers to draw near for help in the hour of need (4:16). It was given this name because of the part it played in the sacrificial ritual of the Day of Atonement; the blood both of the bullock which was offered to make atonement for the high priest and his family, and of the goat which was killed as a sin offering for the whole nation, was sprinkled on the mercy seat and in front of it, while the God of Israel undertook to "appear in the cloud upon the mercy seat" (Lev. 16:2; cf. vv.14f.). The "cherubim of glory" were two gold figures of composite creatures which overshadowed the mercy seat (Ex. 25:18-22; 37:7-9) and served to support the invisible presence of Israel's God, who accordingly is repeatedly described as the one "who is enthroned on the cherubim" (1 Sam. 4:4, etc.). It was because of this function that they

were called "cherubim of glory"; the glory is the *shekhînah*, the radiant presence of God dwelling in the midst of his people.[50]

There has never been any doubt, then, what is denoted by τὸ ἱλαστήριον in Heb 9:5. The KJV, RV, RSV and JBP rendered it 'mercy seat'. The NEB's 'place of expiation' and NIV's 'place of atonement' have the virtue of retaining the concordance of the ST. We would recommend 'place of propitiation' or 'place of atonement' in line with the above exposition of LXX usage. The GNB, alone of all our translations, fails to preserve the reference to OT ritual of sacrifice with its generalised rendering 'the place where sins were forgiven'. Incidentally, the use of the past tense 'were forgiven' seems to imply that at the time the Epistle was penned, this ritual was no longer observed. There is, of course, no verb in the original, but the substitution is typical. In the following paragraph, namely Heb 9:6-9, the writer describes the priestly ritual as it is still going on and the GNB faithfully reproduces the present tenses of the Greek verbs without apparently sensing any inconsistency with the 'were forgiven' above: 'The priests go into the outer Tent every day to perform their duties, but only the High Priest goes into the Inner Tent, and he does so only once a year. He takes with him blood which he offers to God...'

4. The use of ἱλαστήριον in Rom 3:25 falls in what is generally agreed to be one of the key sections of Paul's Epistle (Rom 3:1-26). The immediate context states 'For there is no distinction, since all have sinned and fall short of the glory of God, they are justified by his grace as a gift, through the redemption which is in Christ Jesus, whom God put forward (ἱλαστήριον) by blood, to be received by faith'. Dodd's view, so influential for the RSV and NEB, was as follows:

> Here it is unnecessary for our present purpose to decide whether *hilasterion* is an adjective in the accusative singular masculine or a neuter substantive. In any case the meaning conveyed (in accordance with LXX usage, which is constantly determinative for Paul) is that of expiation, not propitiation.[51]

That the usage of ἱλαστήριον in Biblical Greek is the best guide to Paul's meaning is not in dispute. But the preceding discussion has shown that ideas of propitiation are unmistakably present in LXX usage. Furthermore when we study the context of Rom 3:25 we find it is dominated by themes of judgement and wrath. For 'when we consider the general argument of the Epistle to this point, we find that the opening chapters have a single dominating purpose, namely, to demonstrate that all men lie

---

50 F.F. Bruce, *The Epistle to the Hebrews*, revised edition (Grand Rapids: Eerdmans, 1990) 204. Originally published in 1964 in London by Marshall, Morgan & Scott.

51 C.H. Dodd, *The Bible and the Greeks*, (London: Hodder & Stoughton, 1935) 95.

under the condemnation and wrath of God'.[52] The argument begins (1:18) with the announcement 'for the wrath of God is revealed from heaven against all ungodliness and wickedness of men who by their wickedness suppress the truth'. The following verses emphasise that this is not some impersonal, automatic moral law at work, as Dodd seeks to argue in his commentary on Romans[53] but the personal reaction of a Holy God. Thus 'God gave them up to the lusts of their hearts' (1:24); 'God gave them up to vile passions' (1:26); 'God gave them up to a reprobate mind' (1:28). Having described God's wrath on the pagan world in Chapter 1, Paul then rounds on the censorious Jews in Chapter 2 and shows that they are likewise under God's wrath. He clinches his cases with a bracket of OT quotations in Chapter 3 so that 'every mouth might be sealed and all the world brought to trial before God' (3:19-20).

It is this background of universal culpability and condemnation, then, that precedes Paul's announcement of a new factor whereby, quite independently of law, a righteousness of God is revealed, a righteousness leading to the sinner's justification through Christ 'whom God set forth through faith, by his blood (ὃν προέθετο ὁ θεός ἱλαστήριον διὰ πίστεως ἐν τῷ αὐτοῦ αἵματι)'. Commentators agree that ἱλαστήριον goes with 'by (or in) his blood' and not with 'through faith', despite the word order.[54] In other words, Christ became ἱλαστήριον by means of the shedding of his blood. The context of Rom 3:25, then, is so full of the idea of God's wrath that it is not unnatural to expect some expression which indicates its cancellation. This was certainly the interpretation of the older commentaries. Thus Sanday and Headlam's classic *International Critical Commentary* notes:

> It is impossible to get rid from this passage of the double idea (1) of sacrifice; (2) of a sacrifice which is propitiatory...And further, when we ask, Who is propitiated? The answer can only be 'God'. Nor is it possible to separate this propitiation from the Death of the Son. Quite apart from this passage, it is not difficult to prove that these two ideas of sacrifice and propitiation lie at the root of the teaching not only of St Paul but of the New Testament generally.[55]

Much new linguistic, textual, historical and archaeological evidence has become available for biblical studies since the ICC series of commentaries was conceived almost a century ago. The subsequent two volume ICC commentary on Romans by C.E.B. Cranfield, has a lengthy treatment of ἱλαστήριον in which he reviews

---

52 D. Hill, *Greek Words and Hebrew Meanings. Studies in Semantics of Soteriological Terms*, (Cambridge: Cambridge University Press; 1967) 39.

53 C.H. Dodd, *The Epistle of Paul to the Romans*, (London: Hodder & Stoughton, 1932) 49f.

54 C.H. Dodd, *The Epistle of Paul to the Romans*, (London: Hodder & Stoughton, 1959) 79; L. Morris, *The Apostolic Preaching of the Cross*, (London: Tyndale Press, 1955) 79; C.E.B. Cranfield, *Romans*, Vol.1 (ICC) (Edinburgh: T & T Clark; 1975) 210.

55 W. Sanday and A.C. Headlam, *The Epistle to the Romans*, 5th ed. (ICC), (Edinburgh: T & T Clark, reprinted 1975, 1902) 91.

previous scholarly discussion. As the word is used in twenty one out of its twenty seven LXX occurrences to translate the כפרת or mercy seat (cf. Heb 9:5 above) he considers the possibility that Paul is using it here in that sense too, portraying Christ as the anti-type of the OT mercy seat. He recalls that his interpretation has the support of a long exegetical tradition and finds it attractive. However, he concedes that Morris has undermined this interpretation by pointing out that wherever in the LXX ἱλαστήριον means mercy seat, it is used with the definite article. Nor is there anything in the context which can be said to indicate unambiguously that the mercy seat is referred to. In evaluating Dodd's study, Cranfield supports Morris' criticism that Dodd neglected the contexts of ἱλαστήριον terminology, and he agrees that the averting of wrath is basic to the OT usage as it is to extra-biblical Greek. With regard to the interpretation of ἱλαστήριον in Rom 3:25, he reduces the options to four:

(i) propitiatory or propitiating
(ii) a propitiator
(iii) a propitiation
(iv) a propitiatory sacrifice

In view of the additional phrase ἐν τῷ αὐτοῦ αἵματι (in his blood) he finally recommends the fourth. Paul is saying 'that God purposed Christ as a propitiatory victim'.[56]

At this point it might be appropriate to comment on the translation of αἷμα. Despite Nida's acknowledgement that 'blood' should be retained in the NT passages "where there is a clear reference to blood as a symbolic element in the sacrifice of Jesus",[57] the GNB translates ἐν τῷ αὐτοῦ αἵματι in Rom 3:25 with "by his death". Since ἱλαστήριον is again translated by the general phrase 'the means by which people's sins are forgiven', the reader is deprived completely of the two clues which tell him that the death of Jesus is being explained by Paul in terms of OT sacrificial categories. In fact, the GNB's systematic removal of references to Jesus' blood is difficult to understand. Nida defends it by pointing to a number of passages where it is retained (e.g. John 6:53-56; Heb 9:14; 10:29; 1 John 1:7 and the reference to the Lord's supper, viz. Matt 26:28; Mark 14:24; Luke 22:20; 1 Cor 10:16; 11:25, 27) and by adding that:

> It would be a serious mistake, however, to assume that wherever the Greek term *haima* occurs, it should always be translated "blood" since in many instances it has quite a different meaning. In Matthew 27:24-25, Pilate washes his hands and says to the crowd, "I am innocent of the

---

56 C.E.B. Cranfield, *Romans*, Vol.1 (ICC) (Edinburgh: T & T Clark; 1975) 217 cf D. Moo, *Romans 1-8* (Chicago: Moody Press, 1991) 231-37..

57 E.A. Nida, 'Translating Means Communication,' in *Linguistics and Anthropology* ed. M. Saville-Troike (Washington D.C.: Georgetown University Press, 1977) 75.

> *haima* of this man". Quite clearly Pilate is referring to Jesus' forthcoming execution, and when the crowd shouts back, "May his *haima* be upon us and our children" the reference is to their demand for Jesus' death. For this reason the Good News Bible renders Pilate's statement as "I am not responsible for the death of this man" and the crowd's response as "Let the punishment for his death fall on us and our children".[58]

It is not easy to follow Nida's reasoning here. Admittedly there is no allusion to sacrificial ritual. But 'blood' in English as well as Greek, may be used metaphorically as well as literally. To claim that αἷμα does not mean 'blood' in an expression like "I am innocent of the αἷμα of this man" is to take an extraordinarily wooden attitude to language. One wonders why Pilate bothered to take water and symbolically wash his hands before the crowd. The GNB's renderings are a needless impoverishment. 'Blood' remains in the English language as a particularly vivid metonymy for death.

5. Finally, we turn to the noun ἱλασμός which in the NT occurs only in 1 John at 2:2 and 4:10. As the context provides little new evidence, we assume the term bears its normal meaning 'propitiation'. Nothing in the context of the eight LXX occurrences gives us reason to interpret it otherwise.

The first passage, 1 John 2:2, says "If any man sin we have an advocate with the Father, Jesus Christ the righteous, and he is (ἱλασμός) for our sins". The second in 1 John 4:10, 'Herein is love, not that we loved God, but that He loved us and sent His son to be the ἱλασμός for our sins'. There is no explicit mention of God's wrath in the three brief Johannine Epistles, but in his Gospel, John does state that 'the wrath of God abides' on the disobedient unbeliever (3:36 cf 5:29), so the concept is clearly not foreign to the 'apostle of love', as he is known. Moreover, the fact that Jesus Christ the righteous is the advocate in heaven could be seen to imply divine hostility. John Stott, commenting on these verses, succinctly captures the uniqueness of biblical propitiation—'It is an appeasement of the wrath of God by the love of God through the gift of God'.[59]

Once again we must underline the inadequacy of the GNB translation of ἱλασμός as 'the means by which our sins are forgiven' (though the NEB's 'remedy for the defilement of our sins' is no better).

There are two major issues involved here. The first is whether ἱλάσκεσθαι and its cognates are to be understood in terms of 'propitiation' or 'expiation'. We have

---

58 E.A. Nida and C.R. Taber, *The Theory and Practice of Translation*, (Helps for Translators, No.8; Leiden: Brill, 1969) 76.

59 J.R.W. Stott, *The Epistles of John*, 2nd ed., (Leicester: InterVarsity Press and Grand Rapids: Eerdmans, 1988) 88.

provided, briefly, reason to doubt Dodd's case for the latter understanding of the words. There is no doubt that, although still strange to the modern Western mind, the language of 'expiation' is less repugnant than that of 'propitiation'. (This is *not* a comment on the reasons for using 'expiation', but on the results of doing so.) A translation which gives priority to the receptor will obviously find it hard to retain such language.

But 'expiation' still leaves us firmly within the domain of Israel's cultus, and so makes clear to the modern reader that the NT explains the death of Christ in terms of OT sacrificial ritual. It is surely a major defect of the DE translations we have considered that they sever this connection, and thus give their readers no opportunity to see *how*, in Biblical terms, God in Christ deals with sin.

D. CONCLUSION

The writers of the NT utilised terminology which lay at hand in the Greek Septuagint. In many cases this terminology had acquired a slightly different and more restricted sense than in secular usage, either because of its use as translation equivalents for Hebrew religious vocabulary or because of the new context in which it was embedded. Biblical commentators are unanimous that this terminology is highly significant because it anchors the gospel of Jesus firmly in the religious traditions and eschatological hope of Israel. However, Nida's DE theory, and its exemplification in the GNB, takes no account of the significance of this technical terminology, replacing it with simplified paraphrases which, though more intelligible to the modern reader, deprive him of access to the 'universe of discourse' of the NT writers.

This study focused on a particular group of cultic words associated with the sacrificial system, which was not only central in the religious history of Israel but had been part of the social experience of many NT writers. The study was carried out along quite conventional lines. No attempt was made to experiment with more recent methods such as the semantic field approach or the meaning-relations approach of structural semantics.[60] However, the investigation has sought to avoid the kind of pitfalls pointed out by Barr and has given full value to context and synchronic description. Certainly in the field of biblical studies semanticists have a distinct advantage over their colleagues in other areas of linguistic research in so far as they have a closed literary corpus to deal with.

---

60 cf. J.F.A. Sawyer, *Semantics in Biblical Research*, (London: SCM, 1972); J. Lyons, *Semantics*, Vol 1, (Cambridge: Cambridge University Press, 1977)

The particular terminology selected was the ἱλάσκεσθαι group of words, which in both classical and Koine Greek refers to the placating or appeasing of the wrath of a person—usually associated with a vengeful and capricious god. Much consideration has been given to the view of C.H. Dodd that in the LXX usage, influenced by the underlying Hebrew text, practically no vestige of the propitiatory sense remains and that rather, these terms come to refer to an impersonal expiation or cancellation of sin—at least in cultic contexts. This, according to Dodd, was the usage inherited by the NT writers. His views have been very influential in English Bible translation since 1935.

Our own study has confirmed that the underlying Hebrew text generally provides a good guide to the interpretation of the Greek version. However, not all the LXX translators seem to have regarded their task as one of mechanically inserting equivalents. Ideas expressed in the context, rather than the presence of a particular Hebrew term, often influenced their translation into Greek. Dodd's neglect of this factor has been rightly criticised by Morris and Hill.[61] Dodd was, however, correct to recognise that the language of the LXX, like its Hebrew *Vorlage*, is not entirely homogenous and he was right to allow for the possibility that usage of ἱλάσκεσθαι words in the cultic religious register might not be the same as that in the conventional language (where he acknowledged that propitiatory ideas prevailed).

In the LXX there are some one hundred and sixty occurrences of ἱλάσκεσθαι words normally as translation equivalents for the כִּפֶּר word group in the Hebrew Bible. Occasionally ἱλάσκεσθαι words are used unexpectedly to translate other Hebrew verbs meaning 'forgive' or 'cleanse'. But closer inspection of the context reveals references to divine wrath and its avoidance which apparently influenced the translator to opt for a propitiation word. Most occurrences of ἱλάσκεσθαι words are in the context of the sacrificial cult. Here the words acquire the technical sense 'to make atonement' (i.e. between God and man by the offering of an appropriate gift). However, there is no evidence that propitiatory connotations have disappeared. In urging the use of 'expiation' rather than 'propitiation', Dodd, like Nida, was influenced more by theodicy than linguistic evidence. That is not to say that there are no modifications of the associations of these terms compared with their extra-biblical sense. The context of the Scriptures made it clear that the God of Israel is perfectly righteous and free from arbitrariness and caprice in His actions. Moreover, He Himself graciously provides what is necessary for the averting of His righteous wrath from man. It is this cultic usage that is inherited by the NT writers.

---

61 L. Morris, *The Apostolic Preaching of the Cross*, (London: Tyndale Press, 1955); D. Hill, *Greek Words and Hebrew Meanings. Studies in Semantics of Soteriological Terms*, (Cambridge: Cambridge University Press; 1967).

When we turn to the six occurrences of ἱλάσκεσθαι words in the NT (Heb 2:17; Luke 18:13; Heb 9:5; Rom 3:25; 1 John 2:2; 4:10) it is clear that the technical usage of LXX is determinative in each case except one (Luke 18:13). In other words the ST confronts the translator with a concatenation of ideas which, however foreign or repugnant to the modern mind, are vital to an understanding of the writer's message—sacrifice, blood, propitiation, cleansing, forgiveness—ideas rooted directly in the sacrificial system of the OT law.

The propitiation-expiation debate, then, is of minor significance compared with the importance of recognising that this is technical language drawn from the sacrificial cultus. The use of these ἱλάσκεσθαι words in the Bible reflects a real concordance in the ST. This has in fact, been recognised and reproduced in the standard translations. The GNB, however, by dropping the cultic terminology in favour of a general paraphrase more intelligible to the modern reader, obliterates the concordance of the ST and deprives him of the clues that he needs to understand the NT writer.

CHAPTER FOURTEEN

PRESERVING CULTURAL AND HISTORICAL DISTANCE—INCLUSIVE LANGUAGE AND 'ISRAEL' IN RECENT VERSIONS

We now take up the third issue raised by our investigation in Chapter 11 of the DE's handling of 7 representative biblical texts. A crucial test of the adequacy of any translation is how it handles those features of the ST that are most distant, historically and culturally, from the life-experience of the receptor.

A. INTRODUCTION

As we have seen Nida was not insensitive to the possibility that emphasizing 'naturalness' in translation could lead to cultural transposition. Accordingly he warned that the search for natural equivalents must not distort the historical and cultural context of Scripture which is an integral part of its message. Therefore 'Jerusalem' cannot be replaced by 'Washington DC', as in the Cotton Patch Version; 'demon-possessed' cannot be translated by 'mentally distressed' as in J.B. Phillips.

Nevertheless since DE theory regards translation as an act of communication whose success will depend on the receptors' attitudes as well as their capacities, we will not be surprised that tension occurs wherever the presuppositions and prejudices of the receptors are at odds with those of the ST.

We have been alerted to such conflicts in earlier chapters where examination of GNB renderings revealed for example, the elimination of anthropomorphic references to God (e.g. to His bodily parts or His jealousy) and the modification of the imagery or sacrifice.

The translation of weight, measures, and money is a particularly difficult area. How does one preserve the cultural and historical distance of the ST and yet provide intelligible renderings? Does the GNB's rendering of 'the first day of the week' by 'Sunday' convey the same meaning (e.g. in Matt 28:1; Mark 16:9; Luke 24:1; John 20:1, 19; 1 Cor 16:2)? It is interesting that the REB has overturned the NEB's dynamic equivalents at this point and returned to a literal translation. Should measures of distance be given in modern 'miles' or Greek στάδια? So far as money is concerned the REB has substituted for NEB's equivalents in pounds sterling, a transliteration of the ST value e.g. 'two hundred denarii.'

Likewise in the case of ancient Hebrew measurements, the REB has stayed with such transliterations as 'bath' and 'kor' whereas the GNB opted for dynamic equivalents from the modern context (e.g. 2 Chron 2:10).

Language is not a neutral instrument. Every language reflects the cultural and spiritual journey of those who speak it. For example the Hebrew verb יָדַע has normally been translated 'know' in English. But in passages such as Genesis 4:1 'Adam knew his wife' GNB translates the verb 'had intercourse with' (and is followed by the Indonesian and other DE versions) despite the fact that this usage has long been accepted in English as a result of the influence of the Bible on the development of our language. Does this choice of a more natural and explicit rendering by the GNB represent an unbiblical understanding of knowledge and of sex?[1]

Likewise in Exodus 36:2 we read that the Lord put חָכְמָה in the heart of the craftsmen who are called to construct the Tabernacle. 'Wisdom' is not the quality that we would see as necessary and so the GNB renders the Hebrew word by 'skill' reflecting the technological emphasis of our world view.[2]

Such 'natural' cultural equivalents do not allow the Bible to speak in its own terms or to challenge ours.

In recent English translations, however, the major concern with regard to cultural acceptability has undoubtedly been 'sexist language'. Pressure for the appropriate use of inclusive language has been just one aspect of the broader movement for the due recognition of the role of women in society. This was evident in our examination of the GNB's translation of Psalm 1 in chapter 11.

B. INCLUSIVE LANGUAGE[3]

Lord Coggan's statement in the Preface to the REB (p.ix) sets out a major motive of most modern translations and revisions in English.

> The use of male-oriented language, in passages of traditional versions which evidently apply to both genders, has become a sensitive issue in recent years; the revisers have preferred more inclusive gender reference where that has been possible without compromising scholarly integrity or English style.

---

1 A. Newman, 'Componential Analysis and Functional Ambiguity Equivalence' *Babel* 21:1 (1975), 25-35.

2 cf. N. Weeks, 'Questions for Translators', *The New Testament Student and Bible Translation* (eds J. Skilton and C. Ladley) (Phillipsburg, NJ: Presbyterian and Reformed, 1978).

3 A fuller treatment is found in the author's 'Bible Translation and Gender', *Interchange* 45 (1989).

Thus Gen 1:26 in REB reads 'Let us make human beings in our image, after our likeness' and Ps 1:1 becomes 'Happy is the one who...'. However, the subsequent resumptive pronouns are masculine thus effectively nullifying the inclusiveness of the initial 'one'. Furthermore the REB translators are not as consistent as their counterparts in the GNB and NRSV revision e.g. at Heb 12:23 it is unlikely that the writer was thinking only of males when he/she penned '[...]the spirits of good men made perfect'!

When the American Bible Society produced *The New Testament in Today's English Version* in 1966 and the complete *Good News Bible* in 1976 it was already sensitive to a changing culture with regard to women's concerns. Minor changes were added in subsequent reprintings. The Preface to the Second Edition of the entire Bible that recently appeared (The Bible Societies 1994) states that the main issues addressed by the revisers were 'passages in which the English style was unnecessarily masculine oriented' and 'passages in which either the style of translation or the terms used had given rise to problems for some readers'. Only the former attracts further elaboration:

> the built-in masculine linguistic biases of both the ancient languages and the English language caused some Bible readers to feel excluded from being addressed by the scriptural Word... In practical terms it means that, where references in particular passages are to both men and women, the revision aims at language that is not exclusively male-oriented... At the same time, however, great care was taken not to distort the historical situation of the male dominated culture of Bible times.

Examples of the new steps to inclusiveness taken by the GNB revisers, seem to fall into four categories. Firstly 'brother' is often replace by 'brothers **and sisters**' (e.g. James 4:11; 1 John 4:20; Acts 15:36). Secondly a singular which was formerly followed by a masculine pronoun is replaced by an indefinite plural. So Luke 4:24 now becomes '**prophets** are never welcomed in **their** home town'. Thirdly, masculine singulars are avoided in other ways. Thus 1 John 4:20 'If someone says he loves God' is changed to 'If **we** say **we** love God' and subsequently 'For he cannot love God' becomes 'For **people** cannot love God'. In Matt 25:40 'these brothers of mine' is changed to 'these members of my family'. While in John 3:5 'unless he is born of water' become 'without being born of water'. Fourthly 'they' is used as a common gender singular such that Luke 9:24 now reads: 'For whoever wants to save **their** own life will lose it, but whoever loses **their** life for my sake will save it.'

The changes are arguably sensitive and not driven by radical feminism. Thus in Genesis 2:7 GNB retains 'man' for אָדָם—'Then the Lord God took some soil from the ground and formed a man out of it'. Where many these days would argue for 'human being'. Inevitably there are still occasional inconsistencies. Matthew 5:15 'No

one lights a lamp and puts it under a bowl, instead **he** puts it on the lampstand' is particularly curious. Firstly the Greek verb is actually plural i.e. '**they** do not light a lamp...' etc. Anyway it is more likely in its cultural context to have had a female subject if gender were to be marked. Comparison with the synoptic parallels (cf Mark 4:21; Luke 8:16) confirm the impression of inconsistency.

Occasionally it could be argued that the historical context has been overridden as in the laws of Exodus 21:12-19 laws concerning homicide, kidnapping, and fighting where GNB alternates masculine and common genders even though the Hebrew subject is אִישׁ and the context envisages males.

Conservative as the GNB revisers have been in their application of inclusive language principles, their stated motive raises serious questions. The Preface gives the rationale that 'some Biblical readers feel excluded from being addressed by the scriptural Word'. This implies that the Bible should be experienced as a direct word to the modern reader in his or her very different context. Yet this is an unrealistic burden to place on the translation. All Bible readers today, men and women, are foreigners in the world of the Bible, and its different 'horizon' has to be recognized and preserved rather than obliterated in translation.

Actually gender is not as deep seated in English grammar as it is in Latin or French where every noun is assigned gender or some Aboriginal languages where every verb is marked as to whether it is 'he' or 'she'. Its main locus as we have seen is our pronoun system. More than eighty bisexual pronouns have been coined since the eighteenth century (ne, ter, heer, et, ip, hesh, himer, hiser etc.) The repeated coining of such neologisms bears witness to an ongoing opposition to the generic masculine in English. On the other hand it demonstrates a native stubbornness to any attempt to force the use of artificial common gender pronouns.

The use of 'one' has been commended as a native epicene as in 'Anybody can see for oneself' or 'Every man and woman is architect of one's own destiny' (an extended use). However, native speakers seem to sense intuitively that such usages are pedantic.

A second area of tension between structure and usage is that of gender marked nouns either in themselves (e.g. widow, nephew) or by the addition of a feminine suffix such as '-ess', '-ette', and '-ine' or the addition of an adjective as in 'lady doctor', 'male nurse'. This marking involves women more than men leading to the charge that English is a sexually biased language which either makes women invisible through the use of the generic masculine or forces visibility on them through such words as

'authoress', 'suffragette', 'heroine'. It is the derivative nature of these feminine forms that is seen to imply the secondary and inferior nature of women.

Other European Languages And Inclusive Language

Gender distinctions in English are essentially arbitrary. We do not read any social significance into the distinctions between a sibling's male and female children (niece, nephew), and between a parent's male and female siblings (aunt, uncle), or between the latter's children, though French does make a distinction between *cousin(e)*. The German borrowing of the French terms alongside the native *Vetter* may reflect a felt need for gender distinction.

Spanish provides a wider range of common gender kinship terms: *padres* parents; *hermanos* brother/sister; *tios* uncle/aunt, *primos* cousins; *sobrinos* nephew/niece. But one would not infer that this reflects a less sexist society since the system is much older than any women's liberation pressures. Presumably too, feminists might well resent that the inclusive form is usually masculine reflecting a patriarchal heritage.

Whereas in English the current trend is against distinctive feminine forms, in German feminists are apparently insisting that the first female bishops should be called *Bischofinnen*. This follows a similar pressure to make women disciples more visible in the Gospel narratives by the use in sections at least of *Jüngerinnen*.[4]

Non Western Languages and Inclusive Language

Ellingworth has summarised the responses received from UBS colleagues with regard to inclusive language sensitivities: Finnish like most other non Indo-European languages knows no grammatical gender and a single personal pronoun refers to all humans. The situation is similar for Turkish. Thai and related languages have a generic word for person and a common third person pronoun. The same is true of Philippine languages, Malay-Indonesia and related languages. A specifier is necessary to distinguish male or female. In Chinese, the term for 'male' doubles as the term for 'humanity' or 'people', as in English until recently. Korean has optional male and female forms but their use is limited to special circumstances. In Bantu languages **muntu** (pl **bantu**) covers both male and female. West African languages such as Ewe, Akan and Ga have specific terms for 'human' and common third person pronouns. Completely unrelated indigenous languages in Latin America make similar provisions.

> Even when due allowance has been made for the fact that all my informants are male, and many of them are expatriate, it appears that languages for which inclusiveness is a structural problem form a small

---

4 P. Ellingworth, 'The Scope of Inclusive Language' *TBT* 42:1 (1992) 133.

> minority, representing a rather narrow though very influential segment of the western world.[5]

Feminine Language and God

We have seen that the language of the ST is sometimes more gender neutral than the traditional English versions suggest. The GNB (together with NJB, NRSV and REB) has sought to remedy the situation and to be sensitive to women readers.

Feminists working in the area of Bible Studies and Theology have inevitably been impatient with what are perceived as minimal and even insignificant concessions. An Inclusive Language Lectionary (1983)[6] called for inclusiveness to be applied to language about God. The Preface stated:

> All persons are equally loved, judged and accepted by God This belief has been promoted by the church and has it roots in the origins of the Judeo-Christian tradition. Young and old, male and female, and persons of every racial, cultural and national background are included in the faith community. Basic to a sense of equality and inclusiveness is the recognition that God by nature transcends all human categories. God is more than male or female, and is more than can be described in historical and culturally limiting terms. Words and language, though inadequate and limited, are means by which we convey God's holiness and mystery. Seeking faithful expression about God and about God's inclusive love for all people the Division of Education and Ministry of the National Council of the Churches of Christ authorised the preparation of An Inclusive-Language Lectionary.
>
> Using the Revised Standard Version as the base text they modified any language that appeared to discriminate against women, or against certain social or racial groups. Masculine pronouns when referring to God or anything pertaining to the deity, were eliminated. Instances of the use of masculine references to Jesus during his earthly life were retained, but the frequency of appearance was diminished. Female imagery for God implicitly in the text was made explicit; male titles and metaphors were recast whenever possible.
>
> This recasting of metaphors resulted in what was considered 'formal equivalents' of several words and phrases. 'Son of Man' was replaced by 'the Human One'; 'Son' or 'Son of God' by 'Child' or 'Child of God'; 'Father' by 'Father' and 'Mother'; 'Lord' when used as a substitute for the divine name appears as 'the Sovereign One' and when it is a reference to Christ it becomes 'Sovereign'.

---

5 Reported by P. Ellingworth in 'The Scope of Inclusive Language' *TBT* 42:1 (1992) 133-134.

6 *An Inclusive Language Lectionary* (Atlanta: John Knox Press, 1983).

Familiar words were also rendered differently. 'Brethren' becomes 'Brothers and sisters'; 'kingdom' is 'realm'; and 'king' is 'ruler' or 'monarch'. Occasionally women's names have been added to the text, e.g., Abraham (and Sarah). In addition to this, whenever darkness is equated with evil it has been replaced by 'night' or other expressions which do not give offence to non-whites.

Some feminist scholars, however, are contemptuous of such modest gains:

> Feminists working the in the area of religious ideas all have some recognition of the revolutionary nature of the women's question as related to patriarchal religions such as Christianity and Judaism. Some regard this as an integral reform that does not touch the substance; a matter of better translation and exegesis that will reveal that Jesus (or Moses) were feminists, although no one managed to notice this until now. Others regard the change as so fundamental that it must bury all patriarchal religions forever in the scrap heap of history as outworn and even demonic world views. For them Judaism and Christianity equal patriarchy and only patriarchy. No one who is truly a feminist can find an authentic meaning for herself within the context of these traditions. To do so is sheer masochism and dependency. Feminists must purge themselves of all traces of adherence to these religions and turn to alternative women's religions.[7]

According to Elizabeth Achtemeier[8] , every feminist theology published in the USA in the last two decades has called for the use of female terms for God. She notes further the frequency of the birthing image:

> The feminist rejection of God and its resulting idolatry are built on the theological misstep of identifying God with His creation. And that misstep becomes inevitable when the feminists reject any notion of the inspiration of the canonical witness to God, make their own experience their authority and use female language for God. As soon as God is called female, the images of birth, or suckling, or carrying in the womb, and, most importantly, the identification of the deity with the life in all things becomes inevitable, and the Bible's careful and consistent distinction between Creator and creation is blurred and lost.
>
> As the Church struggles with the issue of women's full equality, therefore—and struggle it must to insure that equality, if it wishes to live up to its Gospel—let it divide the wheat from the tares in the demands women are making of it. Some of those demands are being couched in theologies totally at odds with the biblical faith. The church must be guided in its liberation of women by the canon of the Bible that remains its sure authority for all faith and practice.

Our reason for discussing inclusive language is that is provides a relevant case study in considering the extent of **cultural adaptation** that can be justified in translation.

---

7 R.R. Reuther, 'Feminism and Patriarchal Religion', *JSOT* 22 (1982).

8 E. Achtemeier, 'Female Language for God', *The Hermeneutical Quest*, (D.G. Miller, ed., Allison Park, P.A.: Pickwick, 1986) 97-114.

Every text reflects elements peculiar to its own natural environment, institutions and culture. Some loss of meaning is inevitable in the process of substitution or replacement in the RL. The problem looms far larger in the translation of an ancient text such as the Bible than it does with material from mathematical studies or scientific experiments where there are no specific local features.

To this point modern versions including the DE translation such as the GNB have handled the inclusive language issue with reasonable sensitivity to the historical integrity of the ST.

As we have seen, it is a non-issue outside western societies. However it is not impossible that in the future feminist calls to overturn the overwhelmingly masculine imagery referring to God might find a responsive ear in those indigenous societies which traditionally have female deities.

We turn now to our second case study of cultural adaptation which does seem to have had ramifications for recent non-Western Bible versions; namely, the handling of terminology relating to Israel.

C. THE FATE OF 'ISRAEL' IN RECENT VERSIONS

Many scholars have reminded us that the Christian movement began within Judaism, as a form of Judaism, and that the New Testament writers described and interpreted the ministry of Jesus in well established Jewish terminology. The incalculable literary influence that the Hebrew Bible (the Christian's Old Testament) has exerted on the New Covenant Scriptures is undisputed. There are 239 acknowledged Old Testament quotations drawn from 185 Old Testament passages. There are a further 198 unacknowledged quotations. Again we find in the New Testament 1,167 direct references to 944 Old Testament passages and to this could be added several thousand allusions to Old Testament verses. This is all the more remarkable if, as normally assumed, the bulk of the New Testament writings was written in a different language, on Gentile soil, for Gentile audiences.

With regard to the actual *Sitz im Leben* of the New Testament documents, the most urgent problems facing the early Christians were their identity vis-a-vis the rest of Judaism, the destiny of Israel, and the status of Gentile converts.

Thus scholars such as Jacob Jervell , Krister Stendahl and D.W.B. Robinson were to interpret the New Testament, and Paul's letters particularly, in the light of the vexed question of the constitution of the people of God after the advent of the Messiah. For example, W.D. Davies, in his presidential address (1976) to the *Studiorum Novi*

Testamenti Societas entitled 'Paul and the People of Israel', claims that Paul's letters were composed in the context of a dialogue within Judaism but were later read outside and over against that context by Gentiles who had little understanding of Judaism. Hence 'the disputes between Paul and his kinsmen once removed from their *intra muros* setting no longer appeared as attempts at the reinterpretation of a shared tradition but as forages of hostility...the denigration or rejection of Judaism and of the people of Israel as a totality.' Thus, after Justin Martyr, it became a commonplace in Western Christendom for the church to assume the titles and privileges of Israel and to read the New Testament writings in the light of an anti-Semitic tradition. This predominant understanding of the Pauline Corpus is one of a number of anti-Jewish stereotypes that continue to give offence to Jewish scholars today.[9]

I would like now to examine the handling of terminology referring to 'Israel' in the GNB and its Dynamic Equivalence counterparts in other languages.

'ISRAEL', 'HEBREW' AND 'JEW'—THE BIBLICAL USAGE

The study of ethnic self-designation is fascinating. What people call themselves depends on whom they are addressing. The closer one gets, the easier it is to distinguish labels such as British and English, Hollander and Dutch, Gypsy and Rom. Often there are more than two appellations, e.g., Aborigine, Koori, Yolngu, Black (and some unprintable ones). The term chosen usually reveals something about the relationship of the speaker or writer to the referents.

'Israel' is the main designation of the descendants of Abraham, Isaac and Jacob in the biblical literature. It has remained the insiders' self appellation. The term 'Jews' came to be used when addressing or quoting non-Jews. Other terms such as 'Hebrews', 'the saints', 'the circumcision', 'the people', 'the twelve tribes', are also used with their own connotations. A Bible translator needs to be sensitive in handling terminology referring to Israel and the Jewish context because such terms function as important cultural nodes in the source text. Before looking at these recent versions, however, it would be appropriate to summarise the biblical usage.

'Israel' is the main name in the biblical literature. The term is found some 2,467 times in the Old Testament and 79 times in the New. A glance at a concordance of the Hebrew Bible reveals, however, that almost all these occurrences are in the first two divisions (i.e. 'the Law' and 'the Prophets'). In the last division, 'the Writings' composed after the destruction of the kingdom of Israel and the exile of its survivors,

---

9 Cf. M.J. Cook, 'The New Testament and Judaism: An Historical Perspective on the Theme', *Review and Expositor* 84 (1987)

this designation was almost entirely superseded by 'the Jews'. The name Israel is formed from the noun אֵל (God) and a verbal prefix meaning 'strives' and is explained in Gen 32:28 in the story of the patriarch Jacob. 'Your name shall no more be called Jacob, but Israel, for you have striven with God and with men, and have prevailed' (cf. Hos 12:4).

Henceforth, Israel was used as the personal name of Jacob (e.g. Gen 50:2; Exod 1:1; 1 Chron 1:34). It was also used as a tribal and national name to refer to his descendants: 'the sons of Israel' (e.g. Exod 40:38; 1Sam 7:2; Isa 47:3). Later, after the Davidic kingdom split in two, the term was applied to the larger northern kingdom until its destruction by the Assyrians in 722 BC.

The southern kingdom which persisted till the destruction of Jerusalem by Nebuchadnezzar in 570 BC was called Judah (Hebrew: יְהוּדָה) after the tribe that settled in the mountainous desert region south of Jerusalem (Josh 20:7; 21:2; Judg 1:16; Ps 63:1). Judah was the son of Jacob and Leah. Leah's commentary on his name in Gen 29:35—'This time I will praise the Lord'—suggests a link with יָדָה (praise) and the divine name (YHWH). In practice, the Greek form Ἰουδαῖος (Jew, Jewish) and Ἰουδαία (Judah), like the Hebrew originals, refer particularly to the place of origin, though Paul's pun in Rom 2:29 warns us not to completely discount the influence of etymology, viz. 'He is a Jew who is one inwardly...His praise is not from men but from God.'

Another term sometimes used in the Old Testament but very seldom in the New is 'Hebrew' (Hebrew: עִבְרִי; Greek: ἑβραῖος), an old word of uncertain meaning related perhaps to the nomadic Habiru people who are frequently mentioned in Babylonian, Ugaritic and Egyptian texts of the mid 2nd millennium. It has been suggested that the Israelites were called the 'עבר people', the 'outlanders' (e.g. Gen 14:13), because they had come from the land beyond. In the older narratives, the word 'Hebrew' seems to have been used in a derogatory manner by others, and sometimes in a self-deprecating manner by Israel itself in dealings with foreigners (Gen 40:15; 43:32; Exod 1:15-19; 2:2-13; 3:18). In certain Old Testament passages, 'Hebrew' designates people who are economically dependent, as distinct from those in Israel who were free (Exod 21:2; Deut 15:12; Jer 34:9, 14). However, that connotation is never primary. The Old Testament usage is consistently ethnic. Most occurrences are found in discourse spoken by or to non-Israelites.

The inter-Testamental period and the New Testament era witnessed an intense struggle within Judaism over the identity of the true Israel in the face of foreign rule. Furthermore, although post-exilic Judaism had considerable missionary success among

the inhabitants of the Hellenistic Mediterranean world—some estimates suggest that up to one tenth of its population were Jews by belief if not by birth—there is much evidence of strong anti-Semitism in contemporary documents. The Gentile world did not appreciate the peculiarity and separation of the Jewish people. Because they refused to participate in Gentile cults and social life generally, they were regarded as godless, haters of foreigners, and even haters of men in general. Alexandrian writers in particular, spread horrific tales about the history and the worship of the Jews which were readily believed and repeated. Contempt for Judaism is revealed in the works of Cicero, Pliny and Juvenal. This anti-Semitism often boiled over in bloody persecution.

No doubt the use of terms relating to the Jews in the New Testament era was largely influenced by these conflicts. The word 'Hebrew' (as noun and adjective) has the most neutral meaning but is only found thirteen times in the New Testament. It denotes, in particular, the language and script, and then also the people who use them. In 2 Corinthians 11:22 and Philippians 3:5 Paul emphasises his Hebrew speaking origins and affiliations as something positive. It seems that among Jews 'Hebrew' had become an exclusivist epithet proudly used by those who claimed to be uninfluenced by subversive Hellenisation.

'Judah', 'Jew', 'Jewish', and 'Judaism' are terms with a more political or sociological colouring denoting, first of all, membership of the nation and, subsequently, proselytes to Judaism. As we have noted above, these terms began to be used after the destruction of the Davidic kingdom of Israel, in the post-exilic writings of the Old Testament. Ἰουδαῖος occurs 83 times in the Old Testament, 53 of which are in the book of Esther. The Septuagint coins the noun Ἰουδαισμός to represent Judaism as a way of life and faith (2 Macc 2:21; 8:1; 14:38; 4 Macc 4:36) and Paul takes up the term in Gal 1:13f—Paul also uses Ἰουδαικός to refer to Jewish myths (Tit 1:14) and a verb ἰουδαίζω meaning 'to live as a Jew' (Gal 2:14). While these terms were sometimes used by Jews to refer to themselves, especially in dealings with foreigners (1 Macc 3:34; 8:23; Tob 1:18), by the time the New Testament was being written the word 'Jew' was being used by Gentiles as a term of abuse reflecting the increasing anti-Semitism mentioned above. The derogatory associations connected with Ἰουδαῖος strengthened the tendency within Judaism to opt for the theologically pregnant 'Israel'. This development is reflected in the New Testament writings where it is found as the main self-designation of the Jews.

In the New Testament documents the word Ἰουδαῖος occurs 194 times with two striking clusters in John's Gospel (71 times) and the Acts of the Apostles, especially chapters 13-28 (79 times). The word occurs only 16 times in the three Synoptic

Gospels, and two of these are the derogatory 'King of the Jews' applied to Jesus by Gentile lips. Gentiles also figure in three of the remaining four references in the Synoptics. It is clear that Matthew, Mark and Luke prefer to use 'Israel'. (This term occurs 26 times in such phrases as 'land of Israel', 'house of Israel', 'God of Israel', 'king of Israel'.) The frequent use of 'the Jews' in John's Gospel is therefore quite arresting, particularly as the polemical connotation is very evident.

However, despite John's absolute and pejorative use of 'the Jews' (e.g., 1:19; 7:11;18:12), it seems clear from the few, but fundamental, passages where 'Israel' is used (e.g., 1:31; 1:49; 3:10; 12:13) that the writer is still within the sphere of Israel. Thus Jesus is portrayed as 'king of Israel' and Nathaniel is praised as a genuine 'Israelite' in whom there is no guile (1:47).

In the Acts of the Apostles there are 79 instances of Ἰουδαῖος practically all found in Chapters 13-28 where Paul's missionary journeys in Gentile territory are narrated. There are 15 occurrences of 'Israel' and 14 of these are in the earlier chapters where the Jerusalem church is described.

In Paul's letters 'Jew' is used 26 times, usually in opposition to 'Greek' or 'Gentile' and generally not unfavourably. He uses the term 'Israel' some 20 times to refer to the historic people whose glorious destiny is assured because 'the gifts and calling of God are irrevocable' (Rom 11:28).

Our conclusion, then, is that in the New Testament the various writers' choice of 'Jew', 'Israel' or 'Hebrews' is not haphazard. These terms have distinctive nuances, though the connotations in each writer are not the same. It could be argued that the positions of the various writers vis-a-vis Judaism is revealed in their selection of terms.

We have noted that 'Israel' is the main self designation of the Jews in the New Testament: a name with tremendously favourable connotations, a reminder that they were the chosen heirs of the patriarchs. As Paul says of his kinsmen in Rom 9:4-5, 'They are Israelites and to them belong the sonship, the glory, the covenants, the giving of the law, the worship, and the promises. To them belong the patriarchs, and of their race, according to the flesh, is the Christ.'

Comparison of a Greek concordance of the New Testament with that of the GNB reveals that in the source text there are some 77 references to 'Israel' (including four occurrences of 'Israelite') whereas in the GNB there are 99 even though the GNB fails to reproduce the term in six instances. We shall return to these later.

A similar comparison for the terms 'Jew(s/ish)' reveals that the Greek New Testament has 191 occurrences whereas the GNB has 224 occurrences even though in John's Gospel it actually reduces the number from 71 in the Greek New Testament to 41 in the GNB John.

The GNB rendering of οἱ Ἰουδαῖοι in the Gospel according to John is worthy of special mention. The insistent, often polemical use of 'the Jews' is not reproduced in the GNB. Robert Bratcher, the main translator, has claimed[10] that attention to the context yields four different meanings: 1) the Jewish people; 2) the Judaeans who live near Jerusalem; 3) people hostile to Jesus; and 4) the authorities in Jerusalem. Concordant translation of οἱ Ἰουδαῖοι as 'the Jews' would fail to convey the real meaning. Whatever merit there is in Bratcher's analysis is diminished by his presupposition that the conflict between Jesus and 'the Jews' reflects hostility between church and synagogue in a later age when the Gospel was written. An exegete may perhaps speculate, but a translator cannot get behind the text. Moreover, the DE emphasis on analysis fails to recognise that John could have expressed his meaning in terms of Bratcher's categories had he chosen. John's distinctive, consistent and absolute use of οἱ Ἰουδαῖοι seems to imply a certain attitude and perhaps relationship to Judaism. Bratcher's limited definition of contextual meaning must be rejected. However puzzling John's usage may be to us, it is such a pointed motif of the Gospel that the translation is bound to preserve it.

Lest we be in any doubt about the influence of the GNB in recent non-European versions, it is worth recording that the 22 occurrences of οἱ Ἰουδαῖοι translated by Bratcher as 'the Jewish authorities', are all translated in the same way in the Indonesian, Malay and Kriol; i.e. at John 1:19, 2:18, 20; 5:10, 15, 16, 18; 7:1, 11, 13, 15, 35; 8:22; 9:18, 22; 13:33; 18:14, 31, 36; 19:31, 38; 20:19. The Aboriginal Kriol *Baibul* actually has *serramonimen* for 'authorities', not a bad dynamic equivalent if one accepted Bratcher's position.

Outside John's Gospel the tendency of the GNB and other DE translations to interpolate extra 'Israels' or 'Jews/Jewish' not found in the source text reflects the translator's attempt to make the version more user-friendly for the modern reader. But in translating from one language to another, sensitivity to the complex relation between form and meaning is needed. One cannot make explicit in the version certain background information regarded as implicit in the original without risking distortion of the text and its message.

---

10 R. Bratcher, "The Jews' in the Gospel of John', *TBT* 26:4 (1975)

The GNB translation of the Letter to the Hebrews illustrates how such interpolations can distort the text. We find the adjective 'Jewish' inserted before 'priest', 'law', 'temple', at, e.g., Heb 8:4; 9:25; 10:1, 11; 13:10, 11. Likewise, 'Israelites' is interpolated at 11:28, 29, 30, 31 and 'People of Israel' at 12:18. The recent Malay, Indonesian and Chinese versions reproduce the GNB'S interpolations, even though the Preface to each claims that the translation is from the original languages. Not only are such interpolations gratuitous, since the background information can be gleaned from the 'context', especially from the Old Testament, but they skew the message. One begins to feel that what is being described was as alien to the original receptors as it is to the modern Gentile reader to whom the GNB seeks to accommodate its translation. Yet a natural reading of Hebrews implies that it is in fact addressed to Jews as the traditional title of the letter assumes.

Finally, we shall consider the fate of 'Israel' in three Pauline letters where beyond doubt both the nature and calling of Israel, and the relationship in Christ of Jews and Gentiles are absolutely central.

THE FATE OF 'ISRAEL' IN ROMANS, GALATIANS, AND EPHESIANS.

a. 'Israel' in Romans

The terms 'Israel' and 'Israelites' are found in Romans only in chapters 9-11. There are 13 occurrences at 9:4, 6 (twice), 27 (twice), 31; 10:19, 21; 11:1, 2, 7, 25, 26. Earlier in chapters 1-3, there are nine references to the 'Jews'. Later, in chapter 15, there is a reference to 'the circumcision' and three references to 'the saints'.

Many scholars (e.g., Stendahl[11]) would argue that Romans 9-11 forms the heart of the letter and the main reason for its composition. Paul is concerned here about Israel in God's purposes. Gentiles are treated only in their relationship to Israel. Paul is here expounding the concept 'Israel'. Nowhere else in his writings does Paul use the name so insistently.

It is noteworthy, therefore, that the GNB drops 'Israel' from the text at Rom 9:4, 6b and 31. We shall set these out, adding the renderings of some other recent foreign DE translations published by the UBS. But first, after the clause from the Greek New Testament, I shall set a formal correspondence translation, in this case the RSV. For my purposes the NIV, REB or NRSV would have served equally well.

---

11 K. Stendahl, 'The Apostle Paul and the Introspective Conscience of the West', *HTR* 56 (1963 199-215.

Romans 9:4

Greek NT: 'οἵτινές εἰσιν Ἰσραηλῖται ὧν ἡ υἱοθεσία;'

RSV: 'They are Israelites and to them belong the sonship...'

GNB: 'They are God's people; he made them his sons...'

DGN: 'Denn sie sind Gottes erwähltes Volk, das er als seinen Sohn...'

AKB (Indonesian): 'Mereka adalah umat yang terpilih dan Allah menjadikan mereka anak-anakNya sendiri...'

HNj (Swahili): 'Hao ndio watu wa Israeli ambao Mangu aliwateua wawe watoto wake...'

Comment: It is remarkable that in the very place where Paul is launching his exposition of the destiny of Israel in the divine plan, the GNB should substitute for 'Israelites' the more general 'God's people'. Note that the GNB is followed at this point by other UBS versions in our sample with the exception of the East African Swahili version. I may add that the recent Malay and Chinese New Testaments follow the GNB in rendering 'Israelites' by 'people of God'.

Romans 9:6

Greek NT: 'οὐ γὰρ πάντες οἱ ἐξ Ἰσραήλ, οὗτοι Ἰσραήλ.'

RSV: 'For not all who are descended from Israel belong to Israel.'

GNB: 'For not all the people of Israel are the people of God.'

DGN: 'Aber nicht alle Israeliten gehören zu Gottes Volk.'

AKB (Indonesian): 'tetapi bukan semua orang Israel adalah umat yang dipilih oleh Allah.'

HNj (Swahili): 'maana si watu wote wa Israli ni wateule wa Mungu.'

Comment: The GNB replaces the second reference to Israel by 'people of God'. This reduces the shock value of Paul's statement (and remember that DE theory emphasises the need to elicit equivalent response). The GNB interpretation is no doubt a correct inference but it is not what Paul is saying. Paul is talking only about Israel. The modern Gentile reader might not realise this from the use of 'people of God'. The apostle is saying that not all descendants of Jacob/Israel are true Israelites. Many have failed to fulfil their calling and to enter into the promised inheritance. They are therefore disqualified not only from the broader category of 'the people of God' as a whole, but also from the titles and privileges of Israel that he has enumerated in Rom 9:4-5.

In this case, the other three UBS versions quoted above, viz. the German, Indonesian, and Swahili, all follow the GNB, as do the Malay and Chinese.

Romans 9:31

Greek NT: Ἰσραὴλ δὲ διώκων νόμον δικαιοσύνης εἰς νόμον οὐκ ἔφθασεν.'

RSV: 'but Israel who pursued the righteousness which is based on law did not succeed.'

GNB: 'While God's people who were seeking a law that would put them right with God, did not find it.'

DGN: 'Das Volk Israel aber, das sich abmühte, durch Befolgung des Gesetzes vor Gottes Urteil zu bestehen, hat dieses Ziel nich erreicht.'

AKB (Indonesian): 'Sebaliknya, orang-orang Yahudi selalu berusaha mentaati hukum supaya hubungan mereka dengan Allah menjadi baik kembali. Tetapi mereka justru tidak berhasil.'

HNj (Swahili): 'hali watu wa Israeli waliokuwa wakitafuta Sheria iletayo kukubalika membele yake Mungu, hawakuipata.'

Comment: Again the substitution of 'God's people' for 'Israel' in the GNB is highly unsatisfactory. Paul is describing the historical experience of literal Israel that strove for righteousness by keeping the law, but did not make the grade. In passing we note another inaccuracy, namely the translation 'who were seeking a law'. Israel already had the law. διώκων does not mean 'seeking'. The expression is awkward but the RSV's 'pursuing' conveys the idea. The NRSV's 'striving for' is even better.

We note that here other UBS translations show some independence of the GNB. The Chinese and the Malay are as bad in that they both substitute 'the chosen people' for 'Israel'. The Indonesian for some reason opts for 'the Jews', while the Swahili like the German retains 'Israel' but inserts 'people' before it.

b. 'Israel' in Galatians

The churches of Galatia had recently been visited by Judaizers whose teaching had not only cast doubt on Paul's authority as an apostle but also implied that faith in Christ had to be supplemented by conformity to elements of the Jewish law, if the Galatians were to be saved. In answer, Paul expounded the gospel he had received from Christ: to accept the arguments of the Judaizers would be to revert to being under the law with its attendant curse. Rather, God's blessings come via the death of Christ, to those who have faith in Christ (chapter 3).

Finally, Paul gave them some practical advice on how to evaluate the many Jewish visitors who came their way, how to distinguish those who wanted to enforce circumcision on the one hand, from other Jewish believers who followed Paul's own κανών, viz. 'neither circumcision counts for anything, nor uncircumcision, but a new

creation' (6:15). Verse 16, to which we now turn, is Paul's benediction on true Israelites, couched in language that echoes the Songs of Ascent (Ps 120-134).

Galatians 6:16

Greek NT: 'καὶ ὅσοι τῷ κανόνι τούτῳ στοιχήσουσιν, εἰρήνη ἐπ' αὐτοὺς καὶ ἔλεος, καὶ ἐπὶ τὸν Ἰσραὴλ τοῦ Θεοῦ.'

RSV: 'Peace and mercy upon all who walk by this rule, upon the Israel of God.'

GNB: 'As for those who follow this rule in their lives, may peace and mercy be with them—with them and with all God's people.'

DGN: 'Allen die sich an diesen Grundsatz halten, schenke Gott seinen Frieden und sein Erbarmen. Sie sind das wahre Gottesvolk Israel.'

AKB (Indonesian): 'Bagi orang-orang yang hidup dengan pendirian itu dan begitu juga bagi seluruh umat Allah, saya mengharap Allah akan memberikan sejahtera dan rahmatNya.'

HNj (Swahili): 'Wanaofuata mwongozo huo nawatakia amani na huruma; amani na huruma kwa Israeli wateule wa Mungu.'

Comment: The GNB drops 'Israel' from the text, assuming that Paul's benediction is a general one for 'all God's people'.

D.W.B. Robinson has argued persuasively against this interpretation.[12]

Paul's teaching about the unity between Jewish and Gentile believers is expressed in the concept of the 'new Adam' (Col 3:10) not the New Israel. This 'new man' category was behind Paul's teaching that all were 'sons of God' and 'one man in Christ Jesus' (Gal 3:26-28) but again this is a broader concept than Israel.

Irrespective of whether one accepts Robinson's interpretation of 'Israel of God' however, our main concern should be that the translation does not unnecessarily close off the exegetical options as the GNB does here by dropping the reference to Israel, thus locking up the reader to its own spiritualised interpretation.

---

12 D.W.B. Robinson, 'The Distinction Between Jewish and Gentile Believers', *ABR* 13(1965) 29-48.

We note that of the other UBS versions sampled, the German (but not the French) leaves open the exegetical question with its 'God's people Israel'. Of non-Western versions the Indonesian, Malay, Chinese and Kriol all follow the GNB in dropping the reference to Israel and substituting 'for all God's people'. The Swahili, however, apart from repeating 'peace and mercy', follows the Greek faithfully and reproduces 'Israel of God'.

c. 'Israel' in Ephesians

The Epistle to the Ephesians 'celebrates, not merely the unity of all believers in Christ, but the unity of Gentiles with Jews in a new unity created by God Himself through the blood of Christ. And underlying this unity is (not some general doctrine of the brotherhood of mankind, but) a historical and theological relationship between the Jews through whom the Gospel came, and the Gentiles who received it from them'.[13]

The handling, therefore, of the one reference to Israel in Ephesians is not insignificant.

Ephesians 2:12

Greek NT: ὅτι ἦτε τῷ καιρῷ ἐκείνῳ χωρὶς Χριστοῦ, ἀπηλλοτριωμένοι τῆς πολιτείας τοῦ Ἰσραὴλ καὶ ξένοι τῶν διαθηκῶν τῆς ἐπαγγελίας

RSV: 'remember that you were at that time separated from Christ, alienated from the commonwealth of Israel, and strangers to the covenants of promise...'

GNB: 'At that time you were apart from Christ. You were foreigners and did not belong to God's chosen people. You had no part in the covenants which were based on God's promises to his people...'

DGN: 'Ihr jedenfalls wart früher von Christus getrennt. Ihr wart Fremde und gehörtet nicht zu Gottes erwähltem Volk. Die Zusagen, die Gott seinem Volk gemacht hatte, galten für euch nicht.'

AKB (Indonesian): 'Pada waktu itu kalian tidak bersatu dengan Kristus, kalian adalah orang asing yang tidak termasuk umat pilihan Allah. Kalian tidak termasuk dalam ikatan perjanjian yang dibuat Allah dengan umatNya.'

HNj (Swahili): 'Wakati ule ninyi mlikuwa bila Kristo; mlikuwa nje ya jamii ya Israeli; mlikuwa wageni na hamkuwa na sehemu yoyote katika lile agano la zile ahadi.'

Comment: For the modern Gentile reader the ancient barrier between Jew and Gentile is of little relevance. But the apostle Paul had fought almost single-handed for 25 years to establish that Christ's death had removed the great dividing wall of hostility

---

13 D.W.B. Robinson, 'Who were "the Saints"?', *RTR* 22 (1963), 45-53.

between Israel and the nations. The struggle has been won but it is only the morning after. Hence he says to these Gentile converts: 'Therefore remember that you were estranged from the commonwealth of *Israel* ' and not just from the generality of 'God's chosen people'.

Of the other UBS versions checked we note that the German, Indonesian, Malay, Chinese and Kriol have all followed the GNB in dropping 'Israel' and replacing it with 'God's chosen people' in Eph 2:12. Only the Swahili has retained it.

D. CONCLUSION

We have raised the question, 'How well do modern versions enable the reader to understand the Bible in its own terms?' This study has sought to examine the handling of terminology referring to Israel in the GNB and its counterparts, especially in non-European languages.

It is the latter that are the major concern. After all, any evaluation of a translation has to take into account its purpose and intended audience. The GNB clearly has real communicative strengths and, arguably, whatever defects it has can be overcome by consulting a more 'formal correspondence' version such as the RSV, REB or NRSV.

However, Christians in the third world do not enjoy the luxury of access to other versions. The politics and economics of Bible translation are such that most will only have one Bible, if that, in their own language. What are the implications for third world churches if the only Scriptures they possess are Dynamic Equivalence translations?

Naturalness in translation is no doubt desirable, but must not be absolutised. Intelligibility is a more reasonable aim. The modern version is being asked to take over the evangelistic task of the Christian and the teaching role of the church.

However, our study of the translation of terminology referring to Israel raises the question of 'naturalness for whom?' Which receptors are in mind? This study suggests Westerners! Generally the readings adopted tend to be those of the GNB and the translator's approach very much that laid down in the UBS and SIL translation manuals.

CHAPTER FIFTEEN

EXPLICITNESS AND THE WESTERNIZATION OF SCRIPTURE

The final issue to be considered in this thesis, and one raised by the investigation made in Chapter 11, is how DE translations handle implicit information and metaphorical language in the ST.

A. IMPLICIT INFORMATION IN THE SOURCE TEXT

It has long been recognized in the history of translation that a source text (ST) has implicit meaning that may need to be made explicit if its translation is to be understandable in the Receptor language (RL).

For instance, the Authorized Version (1611) regularly supplied words in italics where the King James translators felt English required this for the translation to be intelligible. Thus, in Matthew 1:6 we have 'her *that had been the wife* of Urias,' in Matthew 15:6 'and honour not his father or his mother, *he shall be free*,' in Acts 1:13 'James *the son* of Alphaeus ... Judas *the brother* of James', in Romans 11:4 'who have not bowed the knee to *the image of* Baal,' and in 1 Corinthians 10:27 'If any of them that believe not bid you *to a feast*.'

The practice of using italics for this purpose was deliberately abandoned in the (English) Revised Version. The preface to the first edition of the Old Testament (1884, p.x) states, 'that all such words, now printed in italics, as are plainly implied in the Hebrew and necessary in the English, be printed in common type.' Although the printing of italics was abandoned, the principle was clearly recognized and stated that some of the implicit information in the original has to be expressed explicitly in a translation.

More recent translation fashions favour those procedures which lead to what is termed a 'natural, clear, simple and unambiguous translation.'[1]. The determinative role granted to the receptor in Eugene Nida's Dynamic Equivalence theory of Translation[2], to which the United Bible Societies are committed,[3] has led inevitably to a new emphasis on explicitness in modern versions. In fact, Robert Bratcher, Nida's colleague who is the main translator of the GNB, has singled out *explicitness* as one of

---

1 From the Introduction to the *Good News Bible* 1976
2 See my 'Dynamic Equivalence Bible Translations' *Colloquium* 19 (1986),43-45
3 Euan Fry 'Current Trends in Scripture Translation' *UBS Bulletin* No. 124/125

the three features that mark the GNB as a Dynamic Equivalence (DE) translation, the other two being *contextual consistency* and *naturalness*[4].

The modern translator of a Biblical text faces the problem that the original writer and his readers had shared information which he did not need to elaborate or specify. This shared information may not be available today. Bratcher cites 1 Corinthians 7:36-38 as an example of a situation where we simply do not know enough to determine the exact relationship between a man and his παρθένος. He then goes on to argue:

> But where there is information implicit in the text itself the translator may make it explicit in order to allow his readers to understand the meaning of the text. Contrary to what some might think this does not add anything to the text: it simply gives the reader of the translation explicit information which was implicitly available to the original readers. To identify 'myrrh' as a drug in Mark 15:23 is not to add anything to the text; it simply tells the modern reader what the ancient reader knew, that myrrh was used as a narcotic to dull the senses. And to identify 'Asia' in Acts 16:6 as a province keeps the modern reader from taking it to mean the modern continent of Asia.
>
> The meaning of idioms and figures of speech must be set forth plainly so that today's readers will understand them as did the readers of the original. Since we do not share the Semitic culture of most of the writers and original readers of the books of the Greek New Testament, we may miss the force and meaning of the figures used. In the parable of the rich man and Lazarus, for example, we read that Lazarus died and was carried by the angels 'to the bosom of Abraham'. A literal translation tells nothing to the reader who does not know the way in which people at that time reclined at feasts, and does not realize that in Jewish circles the hereafter for the righteous was sometimes portrayed as a great banquet in heaven, with Abraham as the host of God's people. The meaning of the phrase is that Lazarus was taken by the angels to occupy the place of honor and intimacy at the right side of Abraham at the heavenly feast. That is why the TEV has, 'the poor man died and was carried by the angels to Abraham's side, at the feast in heaven' (Luke 16:22). In Matthew 5:41 we read, 'If any one forces you to go one mile, go with him two miles.' The verb translated 'forces' reflects the right which a Roman soldier in Palestine had of compelling a Jew to carry his pack one mile; this is made clear by translating, 'And if one of the occupation troops forces you to carry his pack one mile, carry it another mile.'
>
> Even such a slight literary idiosyncrasy as the use of the passive voice will pose problems, if translated literally. Wishing to avoid naming the holy name of God, the Jews would often use a title ('heaven', 'power', 'the Blessed One', 'the Almighty'), or else use the passive voice of the verb, thus making it unnecessary to name God as the actor. But if a translation simply reproduces the verb in the passive, the reader will not know, as did the original readers, that this is a literary convention and that the real actor is God. Matthew 5:7 reads, 'Blessed are the merciful, for they shall obtain mercy.' It is probably true that some will understand that the mercy

---

4 R.G. Bratcher, 'The Nature and Purpose of the New Testament in Today's English Version', *TBT* 22 (1971) 99.

> received is from God, not from men. But in order to avoid any uncertainty or ambiguity, it is better to translate straightforwardly, 'Happy are those who are merciful to others; God will be merciful to them.' So in the other Beatitudes: 'God will comfort them ... God will satisfy them ... God will call them his sons' (Matthew 5:4, 6, 9). In the same way God is the actor in Jesus' warning against judging others (Matthew 7:1-2): 'Do not judge others, so that God will not judge you - because God will judge you in the same way you judge others, and he will apply to you the same rules you apply to others' (see also Mark 4:24, Luke 6:37-38).'[5]

There is much in Bratcher's argument with which we can empathize. Many of the additions in the GNB are uncontroversial and enhance the intelligibility of the translation for the modern reader, e.g. the provision of classifiers ('*city of* Antioch', '*sect* of the Pharisees') and the clarification of ellipses. But often the attempt to explicitate is not only more boldly interpretative where traditional translations have retained the ambivalence of the ST, but also raises serious questions about the nature of translation. Moreover, in this chapter, I wish to highlight the implications for receptors in non-western societies, who do not have access to the range of versions we have in English, of the emphasis on explicitness in translation. It is not insignificant that Bratcher's examples of explicitness above, and GNB renderings generally, are reproduced in the recent Malay, Indonesian and Chinese versions, including the highly imaginative 'explicitation' of ὅστις σε ἀγγαρεύσει... in Matthew 5:41 as 'if one of the occupation troops forces you to carry his pack ....'!

Nida himself does not seem to treat this question systematically. On the one hand he wants to restructure the message according to the 'channel capacity' of the receptors. On the other hand, one may not add information that is not implicit in the original message. He claims the Amplified New Testament is guilty of that[6]. However,

> cultural conditioning may be supplied if:
> 1. the text is likely to be misunderstood by the receptors
> 2. the text is likely to have no meaning for the receptors
> 3. the resulting translation is so 'overloaded' that it will constitute too much of a problem for the average reader to figure out.[7]

---

5 R.G. Bratcher, 'The Nature and Purpose of the New Testament in Today's English Version', *TBT* 22 (1971) 99f.

6 E.A. Nida, and C.R. Taber, *Theory and Practice of Translation* (Helps for Translators, No.8; Leiden: Brill, 1969) 164-165

7 E.A. Nida, and C.R.Taber, *Theory and Practice of Translation* (Helps for Translators, No.8; Leiden: Brill, 1969)110

More recent manuals on translation have devoted whole chapters to 'Implicit and Explicit Information'.[8] Barnwell, a key SIL theorist, is typical. She says that implicit information should be made explicit,

> (a) when the grammatical or lexical form of the receptor language requires this,
> (b) when the natural style in the receptor language requires this; and
> (c) when the principle of full accurate communication of the meaning of the original message demands it.[9]

The first is unexceptionable as the King James Version's italics witness. The translator will be forced by the receptor language to be more explicit than the original Hebrew or Greek at various points. Thus Bahasa Indonesia distinguishes between the inclusive and exclusive 'we', and in rendering Ephesians 1:3-14 the translator will have to frequently interpret the varying scope of the Greek pronoun ἡμεῖς. Languages such as Balinese and Javanese employ honorific forms and reported speech has completely different forms according to whether the speaker is speaking up (to God, King or social superior), speaking down (as to servants), or speaking to peers. Australian Aboriginal languages do not have passive forms, so Bratcher's example above of Matt 7:1 'Judge not that you be not judged' is apposite. It has to be rendered 'Judge not so that God will not judge you', making explicit that the actor is God. One might well query, however, whether this was really necessary in the GNB or in the Indonesian and Malay counterparts. In fact, Bratcher's 'unpacking' of Jesus' cryptic sayings regularly robs them of their shock value.

The second criterion, that of naturalness, is more problematic. Nida's oft repeated example is Mark 1:4 'John the baptizer appeared...preaching a baptism for the forgiveness of sins' (RSV). He argues that this translation

> is artificial in English and in many languages it is entirely impossible. In fact, in many language there simply are no nouns for "baptism", "repentance", "forgiveness", or "sins", because these are really not objects but events, and events must be expressed by verbs, not by nouns. Furthermore, one cannot ordinarily speak of events in such languages without specifying who takes part in the events, the participants. In Mark 1:4, however, there are no indications in the immediate context as to who does what. In other words, the participants in the events of baptism, repentance, forgiveness, and sins are not indicated. Nevertheless, if this passage is to be really meaningful and natural, even in English, the participants need to be identified.

---

8 eg J. Beekman and J.Callow, *Translating the Word of God*, (Grand Rapids: Zondervan, 1974). K.G.L. Barnwell, *Introduction to Semantics and Translation*, (High Wycombe: SIL, 1974). M. Larson, *Meaning Based Translation: A Guide to Cross-Language Equivalence*, (New York, 1984)

9 K.G.L. Barnwell, *Introduction to Semantics and Translation*, (High Wycombe: SIL, 1974).

With the aid of the 'science of semantics' Nida is aole to reveal the relations between participants and events which are implicit in Mark 1:4 and the meaning of the relation between the events involved. As a result of this analysis he comes up with the restructuring adopted by the GNB and claims that he has only made explicit what is fully implicit in the verse: Mark 1:4

Greek: ἐγένετο Ἰωάννης ὁ βαπτίζων ἐν τῇ ἐρήμῳ κηρύσσων βάπτισμα μετανοίας εἰς ἄφεσιν ἁμαρτιῶν

RSV: John the Baptizer appeared in the wilderness preaching a baptism of repentance for the forgiveness of sins.

TEV: So John appeared in the desert baptizing people and preaching his message: 'Turn away from your sins and be baptized,' he told the people, 'and God will forgive your sins'.

It is a testimony to Nida's immense prestige and influence in the United Bible Societies that most, if not all, versions published since 1970 have accepted this explanation of Mark 1:4.

However, Mark could have expressed it like the GNB in Greek had he chosen to (as Luke does in Acts 2:38). Archbishop Robinson's comment is apt:

> Nida does not explain why, if the participants can remain implicit in Greek, they have to be explicit in English. A sentence like 'the salesman offered a reduction for cash, for clearing his stock' is perfectly good English, and does not always require to be changed into: 'the salesman cried, 'hurry, hurry, hurry...etc.'
>
> If Mark explains the matter no more fully than that, why should the translator?[10]

Naturalness then is a dubious aim in translation. We do not even know whether the Hebraicized Greek of the New Testament was natural for the writers, let alone the original receptors. We have already suggested that *intelligibility is a more appropriate aim than naturalness*.

Barnwell's third criterion for explicitation—'when the principle of full accurate communication of the meaning of the original message requires this'—is the most questionable of all. It would seem to give the translator a blank cheque.

---

10 D.W.B. Robinson, unpublished paper 'A Translation of the Bible for Public Worship', (Australian Anglican Bishops' Conference, 1979).

B. THE PROBLEM—FORM AND MEANING

The problem is that 'the communication of the meaning of the original message', includes implicit information, but this 'implicit information' turns out to be indeterminate. For instance, Larson states that situational meaning is also crucial to the understanding of any text and it may have to be made more explicit in translation.

> A text may be completely unintelligible to someone who does not know the culture in which the language is spoken because there is so much SITUATIONAL MEANING. When translating into another language, the original SITUATIONAL MEANING may need to be included in a more overt form if the same total meaning is to be communicated to the readers.[11]

Larson's point may be valid for *communication* but is it legitimate or feasible for *translation* ?

Beekman and Callow's discussion of the translation of Mark 2:4 highlights the problem.

> Mark 2:4 says, 'and when they could not get near him because of the crowd, they removed the roof above him...' Since no indication was given of how four men, carrying a paralyzed friend, could get onto a roof (and the language helper tended, naturally enough, to think in terms of his own familiar steep thatched roof), the language helper assumed a miracle, similar to Philip's sudden removal from the presence of the Ethiopian official to Azotus. Here, the Greek narrative left an intervening event implicit—that they climbed the outside stairs onto the roof. It is not always possible to leave this implicit in other languages.[12]

The problem they seek to address is really twofold. Firstly, in translation we seldom find equivalence at the level of words. Thus στέγη in the ST conjured up a 'flat roof' for the original readers whereas the RL word suggested a 'steep thatched roof'. Secondly, and more significantly, the RL readers were completely unaware of information assumed in the ST. In fact, they supplied from their own cultural context the belief that people can move from place to place miraculously and arrived at the conclusion that the five men got onto the roof by supernatural means.

Beekman and Callow recommend explication in cases like the above on the grounds that misunderstanding arises from the differing properties of the two languages concerned. They profess to adopt the conservative approach 'that implicit information may be expressed, if and only if, the RL necessitates it' but then add, 'it is made

---

11 M. Larson, *Meaning Based Translation: A Guide to Cross-Language Equivalence*, (New York: University Press of America, 1984) 37

12 J. Beekman and J.Callow, *Translating the Word of God*, (Grand Rapids: Zondervan, 1974) 47.

explicit because the grammar or the meanings, or the dynamics of the RL require it in order that the information conveyed will be the same as that conveyed to the original readers.'[13]

However, as has recently been pointed out by Ernst-August Gutt[14], most of their examples of 'implicit information' do *not* derive from language-specific principles but rather from the differences in the encyclopaedic knowledge that SL and RL readers respectively bring to the text. *There is no way that those problems can be fully overcome in the translation itself.*

The whole area of implicit information will continue to be a minefield for translators as long as the UBS and SIL manuals fail to distinguish between translation and communication. The aim of Bible translation should be equivalence between the ST and the RL version in terms of their semantic contents.[15] Any background information or contextual adjustments necessary for successful communication of the message must be supplied by other means, not least the teaching ministry of the church.

Form and Meaning

Western translators are consistently frustrated by the high regard shown by indigenous co-workers for the forms of the original. To Westerners, it is the message that counts. It is not surprising that such disparagement of the significance of the form of the ST leads to restructurings that are far more radical than the norms of the RL demand.

The truth is that language is not a mere receptacle. Nor does the Bible translator work with some disembodied 'message' or 'meaning'. He is struggling to establish correspondences between expressions of the different languages involved. He can only operate with these expressions and not with wordless ideas that he might imagine lie behind them. Translators must not undervalue the complex relationship between form and meaning. One cannot make explicit in the RL text certain background information without risking distortion of the text and its message.

As we noted in the previous chapter the GNB version of the Letter to the Hebrews inserts the adjective 'Jewish' before 'priest', 'law', 'temple' at , e.g., Heb 8:4, 9:25, 10:1, 10:11, 13:10, 13:11 (as do the recent Malay, Indonesian and Chinese versions, even though the preface to each claims that the translation is from the original

---

13 J. Beekman and J.Callow, *Translating the Word of God*, (Grand Rapids: Zondervan, 1974) 58.

14 E-A. Gutt, 'What is the Meaning We Translate?', *Occasional Papers in Translation and Text Linguistics* (*OPTAT*) No.1 , (Dallas: SIL, Jan. 1987).

15 J.C.Catford, *A Linguistic Theory of Translation* (Oxford: Oxford University Press, 1965) remains the classic treatment.

languages). Not only are such interpolations gratuitous since the background information is retrievable from the 'co-text', especially the Old Testament, but they also change the atmosphere of the message. One begins to feel that what is being described was as alien to the original writer as it is to the modern Gentile receptor.

Serious distortion occurs, too, in the GNB's handling of *worship vocabulary*. It is not insignificant that neither Paul nor any other New Testament writer applies the cultic language of the Temple to the Christian assembly. Rather, these terms are applied to the believer's whole life before God under the New Covenant. However, the GNB seeks to help us to understand what kind of assembly Paul is referring to in 1Cor 11:4, 11:5, 11:13, 11:16, 11:17, 14:19, 14:26 by regularly inserting the word 'worship'.

Again seeking to be more explicit for the modern receptor, the GNB regularly interpolates words like 'sacred', 'ritual', thus arguably importing a western perspective into the text.

e.g.	Gen 12:6	he came to the *sacred* tree of Moreh, the holy place
	Exod 33:19	I will pronounce my *sacred* name
	Deut 7:5	…break their *sacred* stone pillars
	2 Sam 6:16	David jumping around in the *sacred* dance
	2 Sam 15:24	the Levites carrying the *sacred* Covenant Box
	Neh 12:43	the people gave a *sacred* offering to the Levites

In fact, the attempt to be explicit for the modern English reader often results in cultural transposition. Thus Bratcher's translation of τῇ μιᾷ τῶν σαββάτων in John 20, verses 1, 19 seems to fall into that category. The RSV had 'On the first day of the week' which preserves the Jewish context of the events narrated. The GNB substitutes 'Sunday' which has a different meaning in our culture. Again the influence of the GNB is such that its rendering has been adopted in subsequent Dutch, French, Portuguese, Malay, Indonesian and Javanese versions. The German translates literally at 20:1 but follows the GNB at 20:19.

The GNB frequently changes *names* to make the reference more explicit. For instance, in Genesis 35-50, it replaces 'Israel' by 'Jacob' over twenty times, but the nuances are completely different and the change of name has been announced and explained in Gen 32:8. We are left in no doubt by the ST that a name with dubious connotations has been replaced with a noble one. The GNB, in its determination to homogenize names ignores this. Later, in the Prophets, names such as Zion, Ephraim, Jospeh, etc. with their own distinctive nuances are dropped. There is similar replacement of Jerubaal by Gideon in Judges 8:29, 9:1, 16, 9:19, 9:24, 9:28, 9:57,

despite the preceding explanation in 6:32. In the NT Paul addresses Prisca formally by her correct name but the GNB substitutes the diminutive Priscilla (Luke's usage) at Rom 16:3, 1 Cor 16:19, 2 Tim 4:19. Names are not of great importance to Westerners. But it is a matter of regret that the GNB's handling of names is replicated in non-Western Versions such as the Indonesian and Aboriginal Kriol.

Explicitness in *sexual language* is a hallmark of modern Western culture. Not surprisingly we find this exemplified in the GNB and in its foreign language counterparts. Here I simply cite again Gen 4:1, where the literal 'Adam knew Eve his wife' is replaced by 'Then Adam had intercourse with his wife.'. Yet had the Hebrew author wished to be so precise and knowing, he could have used שכב instead of ידע The GNB rendering underestimates the reader and loses the force and delicacy of the original. We have suggested earlier that the Biblical understanding of both knowledge and sex may well have been severely compromised.

C. FIGURES OF SPEECH

Translating figures of speech is notoriously difficult and is worthy of a chapter in itself. The image may be unknown in the RL or have a different association. Or the point of comparison of two items may not be obvious. On the other hand, languages are not immutable systems, and through the centuries English itself has been developed and enriched through translations, not least by the importation of Biblical idioms and figures.

When explicitness is regarded as a virtue, the prospects for Biblical imagery are not good. We have noted earlier the RSV and GNB renderings of Zech 2:6-13 where the Jewish exiles are being summoned home.

Zechariah 2:6-13

RSV

6 Ho! Ho! Flee from the land of the north, says the Lord; for I have spread you abroad as the *four winds* of the heavens, says the Lord.
7 Ho! Escape to *Zion*, you who dwell with *the daughter of Babylon*.
8 For thus said the *Lord of hosts*, after his *glory* sent me to the nations who plundered you, for he who touches the *apple of his eye*:
9 'Behold, I will *shake my hand* over them, and they shall become *plunder* for those who served them. Then you will know that the Lord of hosts has sent me.
10 Sing and rejoice, O *daughter of Zion*; for lo, I come and I will dwell in the midst of you, says the Lord.

11 And many nations shall join themselves to the Lord in that day, and shall be my people; and I will dwell in the midst of you, and you shall know that the Lord of hosts has sent me to you.
12 And the Lord will *inherit* Judah as his portion in the holy land, and will again choose Jerusalem.'
13 Be silent, *all flesh*, before the Lord; for *he has roused himself* from his holy dwelling.

GNB

6-7 The Lord said to his people, 'I scattered you in all directions. But now, you exiles, escape from Babylonia and return to Jerusalem.
8 Anyone who strikes you strikes what is most precious to me.'
So the Lord Almighty sent me with this message for the nations that had plundered his people:
9 'The Lord himself will fight against you, and you will be plundered by the people who were once your servants.'
When this happens, everyone will know that the Lord Almighty sent me.
10 The Lord said, 'Sing for joy, people of Jerusalem! I am coming to live among you!'
11 At that time many nations will come to the Lord and become his people. He will live among you, and you will know that he has sent me to you.
12 Once again Judah will be the special possession of the Lord in his sacred land, and Jerusalem will be the city he loves most of all.
13 Be silent, everyone, in the presence of the Lord, for he is coming from his holy dwelling-place.

That the GNB contracts verses six and seven, makes explicit that the land of the North is Babylon, and restructures verse 8, is not our concern here. Our focus is on the fate of the imagery of the ST.

The GNB drops the twelve figures retained in the RSV. These figures are perhaps not central ones, though "inheritance" vocabulary (verse 12) reflects a theme of both testaments which is generally disappears in the GNB. As to *flesh,* (verse 13) the GNB's aversion to the metonyms "flesh", and even more "blood", is well-known even where these words are a motif in the ST (e.g., σάρξ in Paul; בָּשָׂר in Ezek 22:1-13, 24:6-9).

The dropping of *shake my hand* and *He has roused Himself* (verse 13) signal an important theological tendency of the GNB to sterilize language about God.

Anthropomorphic images are censored out. The Lord is no longer allowed "to bare his holy arm" (or even stretch it out). References to His "jealousy" are normally replaced by bland paraphrases. The new Indonesian translation at Zech 2:6-13 faithfully reproduces all these features noted above.

Elsewhere the GNB replaces a ST figure with another that is regarded as more appropriate in English. Its rendering of Matt 6:2 has been extraordinarily influential in other DE versions.

RSV "When you give alms *sound no trumpet* before you...but...*do not let your left hand know what your right hand is doing*".

GNB "When you give something to a needy person do not make a big show of it...but...do it in such a way that *even your closest friend will not know about it.*"

It is astonishing that Bratcher's parable has been judged superior to that of Jesus in most foreign language versions published by the United Bible Societies. These idioms which GNB finds so difficult have in fact proved so arresting that they entered English permanently as a result of Bible translation in the sixteenth century!

In Matt 5:13-16 Jesus uses two arresting images of his disciples, "You are the salt of the earth...You are the light of the world". When the GNB changes the metaphor to a simile, it reduces the impact of Jesus' words. The German goes even further: "Was Salz für die Nahrung ist, das seid ihr für die Menschen". (What salt is to food, you are to people).

D. METAPHOR AND ITS TRANSLATION

Metaphors fulfil an important role in all human communication. Lakoff and Johnson (1980) have claimed that they structure not only our speech but our conceptual system.[16] It is arguably impossible to think about abstract concepts, not least metaphysical concepts, except in terms of metaphor. This is important in view of the common negative view of Biblical metaphor as something characteristic of a primitive culture.

---

16 G. Lakoff and M. Johnson, *Metaphors We Live By*, (Chicago: University of Chicago Press, 1980).

Our study of the GNB has noted a distaste for anthropomorphic imagery describing God.[17] To the sophisticated modern Westerner it seems childish to picture God as a man who comes down to earth to check how things are going (Gen 18:21) or who utters terrible threats in fury, only to change when someone argues with him, or who is jealous (Ex. 34:14). Yet in the end if such anthropomorphic imagery were deleted, we would be left with imagery derived from our physical environment. There would be no other source. Caird claimed that anthropomorphism is the commonest source of metaphor.[18]

Metaphor is of course largely culture dependent and translators of the Bible are confronted by imagery drawn from cultures separated not only by geographical distance but also by distance in time. Dagut is a Hebrew linguist who is pessimistic about the translatability of metaphor: 'Metaphor is governed by a subtle interaction of cultural experience and semantic associations so that what determines the translatability of a SL metaphor is...the extent to which the cultural experience and semantic associations on which it draws are shared by speakers of the particular TL'.[19]

In an earlier article Dagut (1976)[20] spoke of the paradoxical neglect of metaphor by translation theorists. Significantly Nida (1964) heads Dagut's list of negligent translation theorists. Nida and Taber in *TAPOT* (1969) limit themselves to a three page discussion of 'figurative meanings.'

The whole subject of metaphor its nature and translatability is beyond the scope of this thesis. Seminal work in English was done by Max Black (1962)who acknowledged his debt to I.A. Richards (1936). Black distinguished between three views of metaphor: the substitution view, the comparison view and the interaction view. It is the last on which he focuses attention.[21] In the course of exploring his well known example 'Man is a wolf', Black makes the point that though the metaphor is intended to say something about the subject 'man', the statement also tends to influence the hearers' view of the wolf as well.

Caird comments on this interaction phenomenon which he calls a 'two way traffic in ideas' with his comment on Biblical 'God-talk':

---

17 It is helpful to distinguish anthropomorphic imagery from anthropomorphic language such as we find in the narratives of Genesis 3:8-10 or Genesis 18 where God visits Abraham.

18 G.B. Caird, *The Language and Imagery of the Bible*, (London: Duckworth, 1980).

19 M.B. Dagut, 'More About the Translatability of Metaphor', *Babel* 33(1987) 28.

20 M.B. Dagut, 'Can Metaphor be Translated?', *Babel* 10 1 (1976) 167-71.

21 Max Black, *Models and Metaphors: Studies in Language and Philosophy*, (Ithaca: Cornell University Press 1962, 1976).

When the Bible calls God judge, king, father or husband it is, in the first instance, using the human known to throw light on the divine unknown, and particularly on God's attitude to his worshippers. But no sooner has the metaphor travelled from earth to heaven than it begins the return journey to earth, bearing with it an ideal standard by which the conduct of human judges, kings, fathers and husbands is to be assessed. Because 'the father of the fatherless, the widow's champion is God in his holy dwelling-place' (Ps 68,5), God's human counterpart must 'give the orphan his rights, plead the widow's cause' (Isa 1,17). The human king must be endowed with the insight of God (Isa.11,3; cf. 1 Sam. 16,7). Husbands must love their wives as Christ loved the church (Eph.5,25).[22]

Subsequent theorists such as Kittay and Lehrer[23] have built on Black's interaction approach with their claim that 'in metaphor two otherwise unrelated conceptual domains are brought into contact in a manner specifiable through the use of the linguistic notion of a semantic field'. Semantic field theory would seem particularly relevant for translation of key Biblical metaphors.[24] Black's principal subject becomes the recipient field while the semantic field of the subsidiary subject is designated the donor field.

Two recent important Biblical studies have utilized the insights of Kittay and Lehrer. In *God is King: Understanding an Israelite Metaphor*, Marc Brettler[25] examines what he claims to be the predominant relational metaphor used of God in the Bible together with its 'associated submetaphors'. Nelly Stienstra's study (1993) *YHWH is the Husband of His People* looks at the whole metaphorical system or network implied by this concept whose entailments are seen to pervade the Biblical writings at least from the time of the pre-exilic prophets and not just the obvious passages in Hosea, Isaiah, Jeremiah and Ezekiel.[26]

The significant implication of these two studies, particularly that of Stienstra, is to underline the need for translation theorists to look beyond individual specimens of metaphor (weighing up the cultural obstacles to successful literal translation) and to recognize the significant number of systemic metaphors which structure the basic notion of the relationship of YHWH and His people in the OT particularly.

---

22 G.B. Caird, *The Language and Imagery of the Bible*, (London: Duckworth, 1980) 19.

23 E.F. Kittay and A. Lehrer, 'Semantic Fields and the Structure of Metaphor' *Studies in Language* 5.1 (1981) 31.

24 In this brief reference I am sidestepping the debate between semantic theories of metaphors and pragmatic theories that see metaphors as function of speaker meaning. Metaphors have meaning and therefore require a semantic account, but this must be supplemented by pragmatic considerations. After all, all language is understood contextually.

25 M. Z. Brettler, *God is King. Understanding an Israelite Metaphor*, (Sheffield: JSOT Supplement, Series 76, 1989).

26 N. Stienstra, *YHWH is the Husband of His People* (Kampen: Kok Pharos, 1993).

A recognition and faithful translation of these pervasive metaphorical networks, Sienstra claims, helps reconcile the need for historical accuracy and for present day intelligibility. However, the Bible cannot be brought to the reader. Rather the historical embedding of the text evidenced in, among other things, the pervasive metaphorical networks, means that the reader must be prepared to come to the Bible.

E. CONCLUSION

A salutary article on trends in Bible translation appeared in 1986 in the *International Review of Mission*. It was written by Paul D. Fueter who recently retired from the post of UBS consultant for Europe:

> Our way of transposing the original text into the language and culture of today consists mainly in making its meaning explicit by introducing some analytical language into the message we want to transmit. But our technique may mar the Bible's analogical language and make it less therapeutic. Once we recognize that our explanations appeal to the left part of our reader's brains, while the evangelists wanted their audiences "to change" rather than "to know", we have to ask ourselves whether our transpositions are dynamic and equivalent enough. It seems that the best formal equivalent translations, which are so difficult to understand immediately, have often retained the analogical language of the original. I believe that we should revise the Good News Bibles to make them more dynamic and more equivalent, to give them a better chance to let the language of change speak.[27]

---

27 P.Fueter, 'The Therapeutic Language of the Bible', *IRM* 75 (299) (1986) 211-21.

CHAPTER SIXTEEN

CONCLUSION

The Introduction explained how this study had its genesis in an Indonesian theological faculty in the late 1970s, with students who were being encouraged to develop an indigenous theology, free from Western accretions. Frustration was experienced with the new Indonesian Bible in which certain of the 'cultural nodes' of the source text seemed to have been skewed in translation. I was made aware that the new version exemplified a significant new trend in Bible translation worldwide, inspired by the writings of Eugene A. Nida.

Accordingly the thesis set out to examine Nida's Dynamic Equivalence theory of translation and its impact on the Good News Bible and foreign language equivalents that were published by 1985, especially the new Indonesian translation.

SECTION 1

We saw how the study of linguistics has externalised many of the processes which translators have been employing intuitively for thousands of years. Previously translation theory had tended to centre on the two general issues of:

(i) the conflict between literal and idiomatic translation, and

(ii) the tension between the theoretical impossibility on the one hand and the fact of translation on the other

Having rejected any thesis of radical untranslatability based on linguistic relativity, we proceeded to describe the situations in which loss of meaning most typically occurs. Special attention was given to problems arising from differences of culture, lexis and grammar. Most of the examples chosen reflect the Indonesian situation in which the writer served throughout the 1970s and which provided the original impetus for this study.

It is clear that the degree of difficulty in attaining translation equivalence is closely related to the amount of context available. Thus if we take two texts in different languages, one being a translation of the other, equivalence would be virtually impossible to achieve at the level of the morpheme. Even at the word level we can seldom hope that a particular word in the ST can always be translated by the same word in the TL. It is normally at the sentence level that there can be some realistic expectation of achieving equivalence. Thus while some loss of meaning in translation

is inevitable, the richer the context the less the loss. A written text such as the Bible has become decontextualised in the sense that we cannot expect helpful clues from the context of situation in the way we can with spoken messages. Nevertheless the structure and extent of the biblical corpus is such that the linguistic environment itself (or co-text) provides a vast amount of historical and cultural information necessary for a successful understanding and translation of its message.

If we were to single out the sociological factor that has had the deepest influence on the history of language, religion would no doubt qualify. Most languages have as their earliest written document a religious text. This is just as true of ancient Akkadian, Hittite and Sanskrit as it is for the countless tongues of tribal people in Africa, Latin America and Austronesia for whom Bible translations are being produced. We have seen that, unlike other faiths, Christianity has, from the start, been a translating religion so that most of Europe's languages have as their first written document a translation of the Bible; a situation which is being repeated today in hundreds of tribal languages.

In Bible translation, as in translation of other literature, there are basically two quite different approaches. The first says that the finished product should read like an original creation in the TL. The other focuses on the meaning of the ST rather than on successful communication, forcing the reader back into the alien world of the author. Traditionally the second approach has prevailed in Bible translation, probably because the version functions as an authoritative replacement of the ST, unlike its counterparts in Judaism and Islam which are regarded merely as aids to understanding. However, we have drawn attention to a new world wide trend in Bible translation which is attributable to the influence of Eugene Nida's Dynamic Equivalence theory.

Nida himself has confessed his debt to various different linguistic models.[1] Accordingly, before examining DE theory we gave some brief consideration to four major linguistic 'schools' to which Nida himself pays tribute, viz Tagmemics, Stratificational grammar, Transformational-Generative grammar and Halliday's Systemic grammar.

SECTION II

Until the 1980s the name of Eugene Nida dominated the literature on translation theory.[2] Accordingly we turned to Nida's writings seeking a more objective metalanguage for evaluating translations. More than that we looked for a

---

1 E.A. Nida *Language Structure and Translation,* (Stanford, Stanford University Press; 1975) 272.

2 P. Newmark, 'The Theory and Craft of Translation', *Language Teaching and Linguistic Abstracts,* 9:1 (London: Cambridge University Press, 1976) 111.

comprehensive account of the translation process that does justice to the complexity of language structure and the problem of 'equivalence in difference'.

Nida has designated his approach as a Sociolinguistic theory of translation. In this way he differentiates his treatment not only from the Philological tradition in translation but also from the other Linguistic theories. Nida valued the more 'scientific' analysis of the Linguistic theorists but regards them as inadequate in so far as they treat the texts as objects in and of themselves, more or less unrelated to actual communication events. For him, translation is an act of communication and so the capacities, interests and presuppositions of the receptors primarily account for the success or failure of any translation, and therefore largely determine the formal features any satisfactory translation must possess.

Our own critique of Nida's DE theory takes account of most of his writings but is based primarily on the volume *The Theory and Practice of Translation* (1969) (or *TAPOT*), which is a manual for translators. This choice stems not only from the systematic presentation found in that book but also because Nida himself regards it as the best summary of his theory.[3] The first two chapters of *TAPOT* expound the new concept of translation in broad terms. Subsequent chapters take up in systematic order the fundamental procedures that are being recommended; grammatical and semantic analysis, transfer, restructuring and testing.

Translation, for Nida, consists in reproducing in the receptor language (RL) the closest natural equivalent of the source language (SL) message. Bible translation is no different. The best translation, in his view, does not sound like a translation. Furthermore, the receptor-orientation of DE theory and the emphasis on successful communication is said to accord with the attitude of the Biblical writers themselves. An important assumption of DE Bible translation is that the NT writers expected to be understood. That is why they used the common language—Koine Greek. Therefore, unless an ambiguity in the text is linguistically marked, the translator should not ride the fence but opt for the most likely interpretation. In seeking natural equivalents, however, the translator must not distort the historical and cultural context of Scripture which is an integral part of its message. 'Jerusalem' cannot be replaced by 'Washington DC', 'demon possessed' cannot be translated 'mentally distressed'.

The central problem in the theory and practice of translation is to specify the nature and conditions of translation equivalence. Clearly what counts as equivalence will be influenced by one's theory of language, by purpose of the translation and by the model

---

3 E.A. Nida *Language Structure and Translation*, (Stanford, Stanford University Press; 1975) 222

of linguistic description used in the translation process. Nida himself stresses the informational and the instrumental functions of language whereby it is a means of inducing a response in the hearer/reader. His translation model advocates evaluation on the basis of equivalent response on the part of the receptors. This is, we have suggested, an impossible goal. For a start we know nothing of the response of the original readers of the NT documents.

In describing his processes of Grammatical analysis, Nida rejects any approach to translation which applies its rules to 'surface structure' only. A grammatical surface structure may be ambiguous in that there are two or more possible underlying patterns of relations (cf. Chomsky's 'flying planes can be dangerous') and expressions which have similar grammatical form may involve quite different underlying semantic relations. Nida's utilisation of neo-Chomskian processes of analysis to probe beneath the surface structure of phrases and sentence, thereby making possible a genuine semantic equivalence, has much of value. Applied to the genitive construction in Greek for instance it has been particularly fruitful. However, Nida's analyses and explications are not without a subjective element, and one cannot help but be uneasy about an approach which claims to have discovered the four universal semantic categories. (viz object, event, relation, abstract) and the seven primitive English kernels.

Evaluation of Nida's semantics will be largely dependent on one's assessment of the value of componential analysis. Componential analysis assumes that each lexical unit is composed of a certain number of semantic components and that the words of a language can be grouped into semantic domains. The treatment in *TAPOT* is characteristically lucid and interesting, presenting a wealth of linguistic insights reflecting a life-long acquaintance with a variety of practical problems that confront a director of a Society for Bible translations. His componential analysis would seem to be a potentially useful tool for defining the differences between respective meanings. Nida rightly emphasises the importance of specifying context in semantic description, but his own treatment is marred by failure at this point. Even where the linguistic environment of the term under discussion is specified, he sometimes slides from the Hebrew and Greek texts to the English version on the assumption (undemonstrated) that the word in the English translation can be explained in terms of the underlying ST. In particular there is a failure to do justice to real verbal concordance in the ST, and what is arguably technical terminology is dissipated according to the nuance deemed to be uppermost in the various contexts. Those of more philosophical bent might well

question the 'cognitive reality' of semantic components.[4] The usefulness of the metalanguage provided is doubtful too, if, as one suspects, the semantic components seem to be interpreted on the basis of the linguist's intuitive understanding of the lexical items which he uses to label them. Certainly, as we have sought to show, the examples of analysis presented in *TAPOT* are not free of subjectivity and it would not be surprising if this subjectivity is reflected in DE translation renderings.

The final chapters of *TAPOT* deal with Transfer, Restructure and Testing and contain a wealth of information and authoritative practical advice. One never doubts that this is the work of a master practitioner. And yet when one comes to passages expounding the theory of translation, one is left profoundly dissatisfied. The author's self-confessed eclecticism with regard to models of linguistic description results, not unexpectedly, in some lack of theoretical coherence. More seriously a 'docetic' view of language is reflected in claims that 'words may be regarded essentially as vehicles for carrying the components of meaning' or that transferring the message in translation 'is a bit like packing clothing into two difference pieces of luggage; the clothes remain the same, but the shape of the suitcases may vary greatly, and hence the way in which the clothes are packed must be different.' Such disparagement of the significance of the form of the original text leads to restructurings being recommended that are far more radical than the norms of the TL itself demands and that sometimes amount to a rewrite of the ST.

SECTION III

In Section III we sought to examine and evaluate the *Good News Bible* or *Today's English Version* , not only because of its phenomenal acceptance but also because it represents a conscious attempt to implement Nida's DE theory of translation, and as such has been commended by Nida himself. As we began to see in chapter 11, the GNB has had a significant influence on Bible translation in other languages, having been promoted as a model by the United Bible Societies. However, before beginning our study of the GNB a full chapter (chapter 9) was devoted to a brief history of English Bible translation, as no translation of the Scriptures can be undertaken or evaluated without due regard to its predecessors in the field—not least because such antecedents influence the attitudes of the receptors whose favourable response is so important in DE theory. This history we noted has revealed two dominant trends: the constant appearance of new translations on the one hand, and the continuing fascination of an archaic masterpiece in the King James Version (1611) on the other. The KJV has continued to be the measuring rod for aspiring rivals.

---

4 J. Lyons *Introduction to Theoretical Linguistics* (Cambridge: Cambridge University Press, 1968) 477

Nida himself has commended the KJV, noting that it eschews literalism and in the 'Preface to the Reader' specifically advocates the very qualities that he seeks to promote: readability and accuracy. The problem is that these terms are not self-defining. The recent proliferation of new translations which abandon the formal register of solemn worship and recital in favour of the informal style of the mass media shows that a drastic change has occurred in the popular understanding of what a translation is meant to accomplish. The translators of the KJV showed considerable flexibility, especially in their usage of a variety of synonyms which contributed to its generally excellent literary style as over against the Revised Version (1881) that was supposed to replace it, but which was doomed to failure by its wooden literalism. Nevertheless, no one could ever claim that the KJV was a DE translation. It was not written in popular everyday English. Its style was already archaic, possibly deliberately so, at the time of publication. Just as the NT itself was written in a Jewish Greek style, so the English of the KJV reproduced not only Semitic idioms but also many Hebrew grammatical features. In particular, for our purposes, whatever flexibility the translators showed in rendering indifferent diction, they were careful to reproduce important verbal concordances from the ST. Thus the reader of the KJV (cf. RSV) constantly comes across technical (e.g. cultic) terminology used by the writers, reflecting their assumption that the significance of the message of Jesus could only be grasped from an awareness of the religious traditions and cultus of Israel.

The GNB has enjoyed extraordinary popular appeal. This is due firstly to its substantial intrinsic merits as a common language translation, and secondly to its excellent format, its section headings, outstanding illustrations, useful word list and index. Its main translator, Dr Robert Bratcher, has consciously sought to implement Nida's DE theory—a translation attempts not only to communicate the same meaning as did the original text, but also to evoke from its readers the same reaction aroused by the original text from its readers. DE proponents explain that every common language translation is a DE translation, though not vice versa. But it could be argued in response that the two are incompatible. If the wide variety of literary style and technical terminology of the original cannot be conveyed in the limited vocabulary of common English then there is no hope of achieving that equivalence of receptor response that Nida aims for.

While this point gains credence from the material presented in Section IV this thesis seeks to advance a more fundamental criticism. It is not merely that the GNB fails to exemplify DE principles perfectly but that the DE model itself is wrong-headed insofar as it reflects an inadequate theory of language and an inappropriate definition of equivalence.

Our own evaluation has suggested that the justly celebrated intelligibility of the GNB has not been without cost in terms of semantic loss. It is a simpler and more lucid translation that makes the Bible easier to understand, partly at the expense of there being less to understand. Difficult OT terminology that the NT writers utilised to express their understanding of the gospel of Jesus (e.g. the terminology of temple, sacrifice, exodus, redemption) tends to be dissipated in simplified paraphrases more intelligible to the modern receptor. But this kind of terminology provides vital signposts to the 'universe of discourse' or presuppositions of the NT writers and most of their original readers. The removal of this biblical 'salvation vocabulary' is one of the most crucial points at which the GNB and other DE translations part company with the tradition of English Bible translation hitherto.

Admittedly our own treatment has tended to be negative and to concentrate on the deficiencies of the translation. This is partly because its strong points (e.g. communicativeness) are obvious, but more particularly because of the need to moderate the exaggerated claims made for the GNB by Nida, not least because of its vigorous promotion as a model for Bible translation worldwide. The GNB is often more boldly interpretative than FC translations which seek to keep the ambivalence of the ST. This is not necessarily a bad thing. It depends on the purpose of the translation—something which is not decided on linguistic grounds. Thus decisions as to whether a translation is for scholarly, liturgical, missionary or private reading purposes fall outside the competence of the linguist. The GNB translators, in accordance with DE theory, have adopted a policy of choosing the most likely meaning where a word or construction in the ST may be open to several interpretations or nuances.

Such a policy may be particularly suitable for missionary purposes, or for private reading as an aid to Bible study. On the other hand, it might be regarded as an undesirable policy for a version that is to be used as a study Bible, or in liturgical reading, or as a basis for teaching. The linguist can only draw attention to the consequences of such decisions. We have argued that ambiguity that is generally avoided in scientific language, and tolerated in conventional language, is an essential ingredient in literary language systems and is a major device for evoking feeling. We have drawn attention to such expressions in the teaching of Jesus. Nida has failed to reckon with this feature of literary language and in removing all ambiguous expressions from translation gets rid of a significant device for eliciting the very reader response that looms large in his translation theory.

SECTION IV

In this section we looked more closely at some specific translation problems found in our examination of DE translations in Chapter 11 to see how adequately these are handled. In Chapter 12 we examined one of Nida's basic assumptions often quoted to justify the concentration on common language versions, namely that the NT writings were written in the Greek of the man in the street. That viewpoint, popular earlier this century as a result of Adolf Deissmann's comparative studies on Egyptian papyri, is seen to have been overstated. Subsequent research has examined the Semitic features of the language of the NT. To what extent this represents the influence of the LXX, or the Hebrew-Aramaic mother tongue of the writers, or is a special dialect of Jewish Greek, cannot yet be determined with certainty. The point is we cannot assume that this Hebraized Greek style was 'natural' even for the writers of the NT, let alone for the original receptors, many of whom were Gentiles.

The second problem, dealt with in Chapter 13, was the handling of 'verbal concordance' in the ST. The study focused on a particular group of cultic words, the ἱλάσκεσθαι (propitiation/atonement) terms which have a long history of usage in the Greek Bible or Septuagint. This detailed word study sought to avoid the pitfalls pointed out by James Barr by giving full value to context and synchronic description. The ST was seen to confront the translator with a concatenation of ideas which, however foreign or repugnant to the modern mind, are vital to that text's interpretation—sacrifice, blood, propitiation. DE translations, such as the GNB that drop such cultic terminology in favour of a general paraphrase more intelligible to the modern reader, obliterate the concordance in the ST and deprive him of access to the 'universe of discourse' of the NT writers.

The point of these two chapters was not to denigrate translations which aim at good, intelligible English. Naturalness is highly desirable but it must not be absolutised. One cannot escape the fact that the Bible contains many concepts and expressions which are difficult for the modern reader. There is no evidence that they were much less so for the original readers. They, too, had to cope with technical terminology, with thousands of OT allusions and with Hebrew loan words, idioms and translation that must have been very strange to many of them.

Nida draws on communication theory to underline the concept of the 'channel capacity' of receptors, and says that this must not be overloaded. His warning is salutary, especially where the translators are Biblical scholars whose own familiarity with the ST often blinds them to the problems encountered by ordinary readers when confronted by translations of literal tendency. But channel capacity must not be thought of as

something rigid and inflexible, but rather as something elastic that can be stretched and broadened. The history of the English Bible is a powerful illustration of this very point. The KJV expanded the language of the English speakers such that foreign concepts and expression entered the everyday speech of people who were often illiterate.

Thirdly in Chapter 14 we focused on the need to preserve the cultural and historical distance of the text being translated. Every text reflects elements peculiar to its own natural environment, institutions and culture. Some loss of meaning is inevitable in the process of substitution or replacement in the RL. The problem looms far larger in the translation of an ancient text such as the Bible than it does with material such as mathematical studies or scientific experiments where there are practically no specific local features. Much depends too, on the purpose of the translation, but Nida himself warned against 'cultural transposition' in the translation of the Bible. His own writings have provided some useful guidelines on how to handle cultural adaptation. However, we have noted a potential problem in DE theory where the terminology or categories of Scripture are repugnant to modern readers (e.g., in English versions, sexist language, and jealousy or propitiation ascribed to God: in Indonesian versions, references to Israel). According to the DE model, the translation is a failure if it does not evoke a response similar to that assumed for the original readers. But the situations and presuppositions of the original receptors were so different from those of today's readers that equivalent impact cannot be hoped for unless the strange historical context of the ST is replaced by something more meaningful to the modern reader. At this point the notion of translation has merged into that of communication, and its utility, especially for translating an ancient sacred text such as the Bible, is doubtful.[5]

Whereas the handling of inclusive language is generally judicious we have observed that DE translations badly skew the message of the ST in handling the terminology referring to Israel and the Jewish context of the documents. In a number of places this terminology is replaced by general references to 'the people of God' or 'the chosen people' presumably so that the modern reader senses the application to himself. In other places the constant insertion of 'Jewish' (e.g. before 'priest', 'law', 'temple') changes the atmosphere of the message to such an extent that one feels that what is being described was as alien to the original writer and his readers as it is to the modern Gentile receptor. This insensitivity to important 'cultural nodes' of the ST is the kind of weakness one would expect to find in a translation based on the DE model. A preliminary examination of DE counterparts of the GNB, in Indonesian, Malay, Chinese, French, Javanese and Dutch suggests that only the Dutch version avoids this

---

5 cf. D. Crystal, 'Some Current Trends in Translation Theory', *TBT* 27 (1976) 327.

mishandling of such significant cultural material. New DE translations for regional languages in Indonesia are reducing the many references to Israel because of the unfavourable connotations in an Islamic context.[6] This again illustrates the irreconcilable claims of semantic content and receptor response.

Finally in Chapter 15 we turned to the handling of implicit information in the ST and the translation of metaphor. The treatment in the UBS and SIL Manuals was found to be defective. This was not surprisingly reflected in the GNB and its foreign language DE counterparts.

Although the GNB is a translation for those who speak English, its influence is evidenced not only in other recent European translations but also in at least three important recent non-Western versions (viz. Malay, Indonesian, Chinese). In fact, GNB renderings are regularly reproduced to such an extent that it seems to have been the Source Text rather than the Greek (or Hebrew in the case of the Indonesian OT) despite the claim in the Prefaces that the translators worked from the original languages. However excellent the motivation of those who have laboured to produce these new DE translations, the result is that the receptors must approach Scripture through a Western grid.

The inevitability of a Western grid is guaranteed by the commitment to explicitness in modern Bible translation. The translator avoids ambiguity and selects the meaning he regards as most likely, closing all other interpretative options.

In the past translators have only made explicit the information that the RL required. Now as a result of Nida's influence over the last 40 years manuals used by UBS and SIL translators open a Pandora's box by recommending explicitation whenever 'the principle of full accurate communication of the meaning of the original message demands it'.

In particular the commitment to explicitness means that the metaphor and the motifs of the Bible had to be reprocessed and replaced by the explicit, analytical language with which Westerners feel more comfortable. Yet ambiguity, arresting imagery, and the evocation of multiple associations pervade the Bible. Jesus himself often used such language to shock or puzzle the hearer, to force him to introspect, or to look at things in a completely new way. The substitution of paraphrase for metaphor always involves loss of meaning. Paraphrase is talk within a single domain whereas metaphor links two domains in potentially elaborate parallelisms of infinite depth. In fact, it is

---

6 Conversation with Dr Daniel Arichea, UBS Translation Consultant 22 January 1981.

ironic that the DE emphasis on explicitness, in practice consistently militates against that which is so crucial in Nida's theory—receptor response.

In summary, then, the translator needs more than a science of analysis. Our culture, dominated as it is by technical and the analytical, is profoundly unpoetic. The translator of literature such as the Bible needs sensitivity to the power of words and style and particularly to the use of imagery that expands the horizon, and, in the case of some of the terminology we have drawn attention to, establishes a mental and emotional network rather than a one-to-one connection. Translation involves art as well as science.

Translation is an operation involving languages. This being the case, any theory of translation must draw on a theory of language. DE theory cannot provide the comprehensive account of the translation process that we seek, firstly because Nida's 'vehicular concept' of meaning does not do justice to the complexity of language and to the significance of form. Thus Henri Meschonnic 'was critical of Nida's willingness to dissociate style from meaning "...meaning and form: there are not two dissociable, heterogeneous entities. A text is a whole entity, to be translated as a whole."'[7]. Secondly, his translation model defines equivalence in terms of the response of the receptors. Though any evaluation of a Bible translation must take into account its purpose and the intended audience, the receptor in DE theory is granted such a determinative role that the concept of translation can no longer be distinguished from the more general notion of communication. Even if one were able to measure the reaction of the original readers of the NT documents, one could not hope to stimulate the same response in the modern reader since the presuppositional background is so completely different.

There is no linguistic consensus on the definition of translational equivalence. In fact after over twenty years of debate, the concept of equivalence is being increasingly abandoned. It suggests an illusion of symmetry between languages that does not exist and is said to distort the basic problems of translation.[8] It can be inferred from the above criticisms of recent Bible versions, that our own definition would have a semantic, rather than a receptor response focus. A translation of the Bible, in principle, should aim to retain, as far as possible, the exegetical potential of the ST. This would mean in practice that a good translation of the NT will preserve a sense of historical and cultural distance. It will take the modern reader back into the alien milieu

---

7 cited (and translated) by B. Hatim and I. Mason *Discourse and the Translator* (London and New York: Longman 1990) 9.

8 M. Snell-Hornby, *Translation Studies: An Integrated Approach* (Amsterdam/Philadelphia: John Benjamins Publishing Company, 1988)15-22.

of first century Judaism where the Christian movement began. It will show him how the gospel of Jesus appeared to a Jew, and not how that Jew would have thought had he been British or American.

Post Script for Postconstructionists

Has the investigation achieved anything more than reinforce the writer's prejudice? Clearly my original doubts about the adequacy of Nida's DE approach, for Bible translation at least, have been substantiated. Furthermore, linguistic reasons for that dissatisfaction can now be articulated and supporting evidence adduced.

However, in one important point the results of the research have been totally different from my original premise. I had anticipated that Nida's emphasis on naturalness, communication and receptor response would lead to cultural adaptation and a domestication of the Bible in each target language. Clear indications of this tendency in the GNB have been noted. But astonishingly there was almost no evidence of such domestication in the Indonesian versions or the other recent non-European versions looked at. In fact, the renderings of the more traditional, FC Indonesian versions were regularly more culturally approppriate.

What emerged was the immense influence of the GNB on three important non-Western versions, the Indonesian and (to the extent they were consulted) the Malay and Chinese versions. GNB renderings were found to be regularly reproduced to such an extent that it seems to have been not just a model, but the actual base for translation, rather than the ST. This is despite the claim in the Prefaces that the translators worked from the original languages. The result is that the receptors must approach Scripture through a Western grid.

To what extent the imposition of a Western grid is guaranteed by Nida's emphasis on avoiding ambiguity and adopting explicitness could be a subject for further investigation.

Basil Hatim has recently criticized the Anglo-American translation tradition of the past century with its emphasis on fluency and transparency and its aim of making the original text invisible to the reader. He claimed that English translators of modern Arabic literature, under pressure from publishers, often impose structure or introduce explicit logical connectives (e.g. 'however', 'so') that are assumed in his own Arabic language. In Arabic the burden of meaning is on shared experience whereas in English it rests on the visual text where 'the logic all hangs out'. Arabic literariness resides in the chaos of the text! Textual patterns that are integral to Arabic (e.g. repetition, lexical

couplets) are often dispensed with by English translators even though they are essential to the meaning.[9]

The whole issue of subjectivity and ideology in translation has attracted the attention of poststructuralist linguists. Thus Lawrence Venuti has decribed the grossly unequal exchanges between the hegemonic English language nations, particularly the United States, and others in Europe, Africa, Africa, Asia and the Americas. He claims that Anglo-American publishing has been instrumental in producing readers who are aggressively monolingual and culturally parochial, while reaping the economic benefits of successfully imposing Anglo-American cultural values on a sizeable foreign readership—'if one is intelligible within the outlook of American ideology, then one has a chance of being translated' he says, quoting an Italian Foreign Affairs official.[10]

The analogy with Bible translation is not a comfortable one but it raises the question as to whether the promotion of Dynamic Equivalence translation procedures has become an unwilling instrument of this western cultural hegemony.

---

9 B. Hatim, 'Text Worlds in Transition: Orality and Text Structures in Translation', unpublished address at the 21st Applied Linguistics Association of Australia Conference, Sydney, October 1996.

10 L. Venuti (ed), *Rethinking Translation: Discourse, Subjectivity, Ideology* (London and New York: Routledge 1992)5-6.

BIBLIOGRAPHY

BIBLE VERSIONS:

Alkitab (Terjemahan Lama), Jakarta: Lembaga Alkitab Indonesia, 1879/1958

Alkitab (Terjemahan Baru), Jakarta: Lembaga Alkitab Indonesia, 1976.

Alkitab Kabar Baik, Jakarta: Lembaga Alkitab Indonesia, 1986.

Berita Baik Untuk Manusia Moden, Singapore: Bible Society of Singapore and Malaysia, 1977.

Bonnes Nouvelles d'Aujourd'hui, Paris: Alliance Biblique Universelle, 1971.

Die Gute Nachricht, Stuttgart: Deutsche Bibelgesellschaft, 1982.

Habari Njema Kwa Watu Wote, Nairobi: United Bible Societies, 1982.

Holi Baibul (Kriol), Canberra: Bible Society in Australia, 1991.

Good News Bible, Cambridge: United Bible Societies, 1976.

Revised Standard Version, New York: The Bible Societies, 1952.

Today's Chinese Version, Hong Kong: United Bible Societies, 1975.

***

ACHTEMEIER, E. 'Female Language for God', in *The Hermeneutical Quest*, D.G. Miller, ed., Allison Park, PA: Pickwick, 1986, 97-114.

ACHTEMEIER, E. 'The Translator's Dilemma: Inclusive Language', *Interpretation* 38:1 (1984), 64-66.

ACKROYD, P.R. and EVANS, C.F., eds. *Cambridge History of the Bible Vol. 1, From the Beginnings to Jerome*. London: Cambridge University Press, 1970.

AEJMELAEUS, A. *On the Trail of the Septuagint Translators*, Kampen: Kok Pharos, 1993.

AITCHESON, J. *Language Change: Progress and Decay*, London: Fontana, 1981.

ALAND, K. and ALAND, B. *The Text of the New Testament*, 2nd ed., Grand Rapids: Wm.B. Eerdmans, 1989.

ALEXANDER, P.S. 'Jewish Aramaic Translations of Hebrew Scriptures', in MULDER, M.J. and SYSLING, H., eds., 1988, 217-53.

ALLEN, L.C. *The Greek Chronicles: The Translator's Craft*, Leiden: E.J. Brill, 1974.

ALLEN, W. *Translating for King James*. (the notes of the Revd. John Bois 1610-11), Nashville: Vanderbilt University Press, 1969.

ALTER, R. and KERMODE, F. *The Literary Guide to the Bible*. Cambridge, Mass: Belknap, 1987.

ALTER, R. *The Art of Biblical Poetry*. New York: Basic Books, 1985.

ANDERSON, A.A. *2 Samuel* (WBC), Waco: Word Books, 1989.

ANDERSON, A.A. *Psalms 1–72* (NCB), Grand Rapids: Wm.B. Eerdmans, 1981.

ANDERSON, F.I. 'The Language of Scripture', *Interchange*, 1:2 (1967), 67-70.

ARICHEA, D. and NIDA, E. A. *A Translator's Handbook on Paul's Letter to the Galatians*, Stuttgart: United Bible Societies, 1976.

ARICHEA, D.C., & SEMBIRING, M.K. 'Promoting A Common Language Translation', *The Bible Distributor* 27 (October-November 1986), reprinted in the SIL publication *Notes on Scripture in Use*, Dallas, SIL (1987), 12.

ATKINSON, B.F.C. *The Greek Language*, London: Faber and Faber, 1931.

AU, T.K. 'Chinese and English Counterfactuals: The Sapir-Whorf Hypothesis Revisited', *Cognition* 15 (1983), 155-87.

AUNE, D.E. *The New Testament in Its Literary Environment,* Library of Early Christianity 8, Philadelphia: Westminster Press, 1987.

AUSTIN, J. *How to do Things with Words*, Oxford: Clarendon Press, 1962.

BABUT, I.M. 'Comparison de traductions bibliques' in *ETR* 59:2 (1984), 201-5.

BACHMANN, H. and SLABY, H. *Computer-Konkordanz zum Novum Testamentum Graece*, Berlin and New York: De Gruyter, 1980.

BAILEY, L. R. 'What a Concordance Can Do For You', *BAR* 10:6 (1984), 60-67.

BAILEY, L. R. 'Words and the Translator', *Word World* 3 (1986), 266-77.

BAILEY, L. R., ed. *The Word of God: A Guide to English Versions of the Bible*, Atlanta: John Knox Press, 1982.

BAKER, M. *In Other Words*. London and New York: Routledge, 1992.

BAL, M. *Lethal Love*, Bloomington: Indiana University Press, 1987.

BALD, W-D. 'Context in Contrastive Linguistics' in KASTOVSKY, D. and SZWEDEK, A., eds., 1986, 1117-31.

BALDI, P. *An Introduction to Indo-European Languages*, Carbondale: Southern Illinois University Press, 1983.

BALDWIN, J.G. *Haggai, Zechariah, Malachi,* Tyndale OT Commentaries, Leicester and Downers Grove: Inter Varsity Press, 1972.

BANKS, R. '"Walking" as a Metaphor of the Christian Life', in CONRAD, E.W. and NEWING, E.G., eds., 1987, 303-13.

BARNWELL, K.G.L. *Introduction to Semantics and Translation*, High Wycombe, Bucks.: S.I.L, 1980.

BARR, J. 'Common Sense and Biblical Language', *Bib* 49 (1968), 377-87.

BARR, J. 'The Typology of Literalism in Ancient Biblical Translations', in *Nachrichten von der kön. Gesellschaft der Wissenschaft in Göttingen* II, (1979), 279-335.

BARR, J. 'Translators' Handling of Verb Tense in Semantically Ambiguous Contexts', in COX, C.E., ed., 1987

BARR, J. *Biblical Words for Time*, (SBT 33), 2nd ed., London: S.C.M, 1969.

BARR, J. *Semantics of Biblical Language*, Oxford: Oxford University Press, 1961.

BARTON, J. *Reading the Old Testament.* London: Darton, Longman and Todd, 1984.

BASCOM, R.A. 'The Otherness of the Text', *TBT* 42 (1991), 314-25.

BASSNETT-McGUIRE, S. *Translation Studies*, London: Methuen, 1980.

BATALDEN, S. 'Revolution and Emigration: The Russian Files of the British & Foreign Bible Society 1917-1970' in *The Study of Russian History*, ed. Janet M. Hartley, London: Mansell Publ. Ltd, 1986

BAUER, W., ARNDT, W.F., GINGRICH, F.W., and DANKER, F. *A Greek–English Lexicon of the New Testament and other Early Christian Literature*, 2nd English ed., Chicago: University of Chicago Press, 1979.

BEASLEY-MURRAY, G.R. *The Book of Revelation* (NCB), London: Oliphants, 1974.

BECHTEL, J. L. 'The Modern Application of Martin Luther's 'Open Letter on Translating'' *AUSS* 11 (1973)

BECKER, U. 'Gospel, Evangelise, Evangelist', in NIDNTT, II, 107-15.

BECKWITH, R.T. 'Formation of the Hebrew Bible', in MULDER, M.J. and SYSLING, H., eds., 1988, 39-86.

BEEKMAN, J. 'Metaphor and Simile' *NOT* 31 (1969), 2-69.

BEEKMAN, J. and CALLOW, J. *Translating the Word of God*, Grand Rapids: Zondervan, 1974.

BELL, R.T. *Translation and Translating.* London and New York: Longmans, 1991.

BELLOC, H. 'On Translation' *TBT* 10 (1967), 83-100.

BENJAMIN, A. *Translation And The Nature Of Philosophy: A New Theory of Words*, London and New York: Routledge, 1989.

BENJAMIN, W. 'The Task of the Translator' in *Illuminations*, ed. Hannah Aren (trans. Harry Zohn), New York, 1969

BENOIT, P. 'The Jerusalem Bible' *R&E* 76:3 (1979), 341-50.

BERLIN, A. 'Narrative Poetries etc.', *Prospects*, 6:3 (1986)

BERLIN, A. *Poetics and Interpretation of Biblical Narrative,* Sheffield: Almond Press, 1983.

BERLIN, A. *The Dymanics of Biblical Parallelism,* Bloomington: Indiana University Press, 1985.

BIRDSALL, J.N. 'Language of the New Testament', *NBD*, 713-6.

BIRDSALL, J.N. 'Text and Versions: New Testament', *NBD*, 1264-9.

BLACK, D.A. *Linguistics for Students of New Testament Greek,* Grand Rapids: Baker, 1988.

BLACK, M. 'The Biblical Languages', in ACKROYD, P.R. and EVANS, C.F., eds., 1970, 1-11.

BLACK, M. 'The Theological Appropriation of the Old Testament by the New Testament', *SJT* 39 (1986), 1-17.

BLACK, M. *An Aramaic Approach to the Gospels and Acts,* 3rd ed., Oxford: Oxford University Press, 1967.

BLACK, M. and SMALLEY, W., eds. *On Language, Culture and Religion: In Honor of Eugene A. Nida*, The Hague: Mouton, 1974.

BLACK, Max *Language and Philosophy* (ed. Sidney Hook), Ithaca, NY: Cornell University Press, 1963.

BLACK, Max, *The Importance of Language*, Ithaca, NY: Cornell University Press, 1962

BLAKEMORE, D. *Understanding Utterances: An Introduction to Pragmatics.* Oxford and Cambridge, MA: Blackwell, 1992.

BLOOM, A.H. *The Linguistic Shaping of Thought: A Study in the Impact of Language on Thinking in China and the West*, Hillsdale, NT: Erlbaum, 1981.

BLOOMFIELD, L. *Language*, New York: Holt, 1933.

BODA, M.J. 'Words and Meanings: יִרְאָה in Hebrew Research', *WTJ* 57 (1995), 277-97.

BOERS, H. *The Justification of the Gentiles: Paul's Letters to the Galatians and Romans,* Peabody MA: Hendrickson Publishers, 1994.

BOLINGER, D. *Aspects of Language*, New York: Harcourt Brace and World Inc., 1975.

BOMAN, T. *Hebrew Thought Compared With Greek*, London: SCM, 1960.

BOMAN, T. Review of James Barr, *Semantics and Biblical Words, SJT* 15 (1962), 319-23.

BRATCHER, R. G. 'Englishing the Bible', *R&E* 76:3 (1979), 299-313.

BRATCHER, R. G. 'The English Bible', in *Harper's Bible Dictionary*, Paul J. Achtemeier, ed., San Francisco: Harper and Row (1985), 263-7.

BRATCHER, R.G. 'Glory in relation to Jesus', *TBT* 42 (1991), 401-7.

BRATCHER, R. G. 'The Jews in the Gospel of John', *TBT* 26 (1975), 401-9.

BRATCHER, R.G. 'The Meaning of *Sarx* (flesh) in Paul's Letters', *TBT* 29:2 (1978), 212-8.

BRATCHER, R. G. 'The Nature and Purpose of the New Testament in Today's English Version', *TBT* 22 (1971), 97-107.

BRATCHER, R.G. 'The Revised English Bible', *TBT* 43 (1992), 342-8.

BRATCHER, R.G. 'Translating the TEV New Testament', in SKILTON, J.H. and LADLEY, C.A., eds., 1978, 146-52.

BRATCHER, R. G. *A Translator's Guide to the Gospel of Matthew, Helps for Translators*, London: United Bible Societies, 1981.

BRATCHER, R.G. and NIDA, E. A. *A Translator's Handbook on the Gospel of Mark, Helps for Translators*, Leiden: Brill, 1961.

BRATCHER, R.G. and REYBURN, W. *A Translator's Handbook on the Book of Psalms, Helps for Translators*, New York: United Bible Societies, 1991.

BRETTLER, M.Z. *God is King: Understanding an Israelite Metaphor*, JSOT Supplement Series 65, Sheffield: Sheffield University Press, 1989.

BRIDGES, R. and WEIGLE, L. A. *The Bible Word Book: Concerning Obsolete or Archaic Words in the KJV of the Bible*, New York: Thomas Nelson, 1960.

BRISLIN, R. W., ed. *Translation*, New York: Gardner Press, 1976.

BROOK, S. *The Language of the Book of Common Prayer*, London: Andre Deutsch, 1965.

BROOKS, J. *When Russia Learned to Read*, Princeton, NJ: Princeton University Press, 1985.

BROOMHALL, M. *The Bible in China*, London: The Religious Tract Society, 1934.

BROWER, R.A., ed. *On Translation*, New York: Oxford University Press, 1966.

BRUCE, F.F *History of the Bible in English*, 3rd ed., London: Lutterworth, 1979.

BRUCE, F.F *I and II Corinthians* (NCB), London: Oliphants, 1971.

BRUCE, F.F *The Books and the Parchments: Some Chapters on the Transmission of the Bible*, London: Pickering & Inglis, 1950 (3rd ed., 1963)

BRUCE, F.F. *The Epistle to the Hebrews*, rev. ed., (NICNT) Grand Rapids: Wm.B. Eerdmans, 1990.

BUBER, M. and ROSENZWEIG, F. *Die Schrift und ihre Verdeutschung*, Berlin: Schocken Verlag, 1936.

BÜHLER, K. *Sprachtheorie*, Stuttgart: Fischer, 1934.

BULLINGER, E.W. *Figures of Speech used in the Bible*, London: Eyre and Spottiswoode, 1898 (reprinted 1968 by Baker Book House, Michigan).

BURGON, J.W. *The Revision Revised*, London: John Murray, 1883.

BURKE, D.G. 'Scripture in Electronic Media', *TBT* 44 (1993), 101-11.

BURTON, E. de W. *A Critical and Exegetical Commentary on the The Epistle to the Galatians* (ICC), Edinburgh: T&T Clark, 1921.

BUTH, R. 'Language Use in the First Century: The Place of Spoken Hebrew in a Trilingual Society', *Journal of Translation and Texlinguistics* 5:4 (1992), 298-312.

BUTLER, C.S. 'Recent Developments in Systemic Linguistics', *Language Teaching Linguistic Abstracts*, London: Cambridge University Press, 1978

BUTLER, C.S. *Systemic Linguistics Theory & Applications*, London: B.T. Batsford, 1985.

CADBURY, H. J. 'The Vocabulary and Grammar of New Testament Greek', *TBT* 2:4 (1951), 153-9.

CAIRD, G.B. *The Language & Imagery of the Bible*, London: Duckworth, 1980

CAIRD, G.B. *The Revelation of St John the Divine*, London: Adam & Charles Black, 1966.

CALLOW, J. & K. 'Review of Peter Newmark: *Approaches to Translation* ', *TBT* 33:3 (1982), 335-8.

CALLOW, K. *Discourse Consideration in Translating the Word of God*, Grand Rapids: Zondervan, 1974.

CAMERY-HOGGETT, J. *Irony in St Mark's Gospel*, SNTSMS 72, Cambridge: Cambridge University Press, 1992.

CAMPBELL, D.A. *The Rhetoric of Righteousness in Romans 3:21-26*, JSNT Supplement Series 65, Sheffield: JSOT Press, 1992.

CARROLL, D.W. *Psychology of Language*, Pacific Grove, CA: Brooks/Cole, 1994.

CARROLL, J. B. *Language and Thought*, Engelwood Cliffs, NJ: Prentice-Hall, 1964.

CARROLL,M.Daniel, CLINES, D.J.A. and DAVIES, P.R. *The Bible in Human Society : Essays in Honour of John Rogerson*, Sheffield: Sheffield Academic Press, 1995.

CARSON, D.A. 'New Bible Translation: Assessment and Prospect', a paper for the American Bible Societies Symposium (1993), 37.

CARSON, D.A. 'The Limits of Dynamic Equivalence in Bible Translation' *Evangelical Review of Theology* 9:3 (1985), 200-13.

CARSON, D.A. *The King James Version Debate: A Plea for Realism*, Grand Rapids: Baker, 1979.

CARSON, D.A., MOO, D.J., MORRIS, L. *An Introduction to the New Testament*, Leicester: Apollos, 1992.

CARSTENSEN, B. 'Euro-English' in KASTOVSKY, D. and SZWEDEK, A., eds., 1986, 827-33.

CASSIRER, H.W. *God's New Covenant.*, Grand Rapids: Wm.B.Eerdmans, 1989.

CATFORD, J.C. *A Linguistic Theory of Tranlsation*, London: Oxford University Press, 1965.

CHAMBERLAIN, W.J. *Catalogue of English Bible Translations*. Westport, CT: Greenwood Press, 1991.

CHAMBERS, B.T. *Bibliography of French Bibles*, Geneva: Droz, 1983.

CHARLES, R.H. *A Critical and Exegetical Commentary on the Revelation of St John* (2 vols) (ICC), Edinburgh: T & T Clark, 1920.

CHATMAN, S. and LEVIN, S.R. *Essays on the Language of Literature*, Boston: Houghton, Mifflin, 1967.

CHILTON, B. *Beginning New Testament Study*, Grand Rapids: Wm.B. Eerdmans, 1986.

CLINES, D.J.A. 'Theme in Genesis 1-11', *CBQ* 38 (1976), 483-507.

CLINES, D.J.A. 'Deconstructing the Book of Job', in Martin Warner, ed., *The Bible As Rhetoric: Studies in Biblical Persuasion and Credibility*, London and New York: Routledge, 1990, 65-80.

CLINES, D.J.A. *The Dictionary of Classical Hebrew: Vol 1 Aleph*, Sheffield: Sheffield Academic Press, 1993.

CLINES, D.J.A. *The Theme of the Pentateuch*, Sheffield: JSOT Press, 1978.

CLINES, D.J.A., FOWL, S.E. and PORTER, S.E. *The Bible in Three Dimensions*, JSOT Supplement Series 94, Sheffield: JSOT Press, 1990.

COLLINS, A.Y. *The Combat Myth in the Book of Revelation*, Harvard Dissertations in Religion 9, Missoula, MT: Scholars Press, 1976.

CONRAD, E.W. and NEWING, E.G., eds. *Perspectives on Language and Text: Essays and Poems in Honor of Francis I. Andersen's Sixtieth Birthday, July 28, 1985,* Winona Lake, Indiana: Eisenbrauns, 1987.

COOK, J. 'The Exegesis of the Greek Genesis' in COX, C.E. ed., 1987, 91-125.

COOK, M. J. 'The Gospel of John & the Jews', *R&E* 84:2 (1987), 259-71.

COOK, M.J. 'The New Testament and Judaism: An Historical Perspective on the Theme', *R&E* 84:2 (1987), 183-99.

COOK, M. J. 'Rabbinic Judaism and Christianity', *R&E* 84:2 (1987), 201-20.

COTTERELL, L. & TURNER, M. *Linguistics and Biblical Interpretation*, Downers Grove: InterVarsity Press, 1989.

COWLEY, R.W. 'Technical Terms in Biblical Hebrew', *TBT* 37 (1986), 21-8.

COX, C.E., ed., *LXX–VII Congress of the International Organization for Septuagint and Cognate Studies (Leuven 1989),* Atlanta, GA: Scholars Press, 1991.

COX, C.E., ed., *LXX–VI Congress of the International Organization for Septuagint and Cognate Studies (Jerusalem 1986),* Atlanta, GA: Scholars Press, 1987.

CRANFIELD, C.E.B. *A Critical and Exegetical Comentary on the Epistle to the Romans, Vol. I* (ICC), Edinburgh: T & T Clark, 1975.

CRAIGIE, P.C. *Psalms 1–50* (WBC), Waco: Word Books, 1983.

CRIM, K.R. 'Philosophies, Theories, and Methods in Bible Translation' in Kent Harold Richards, ed. *Society of Biblical Literature 1985 Seminar Papers*, Atlanta, GA: Scholars Press, 1987, 161-7.

CRIM, K.R. 'Modern English Versions of the Bible', *NIB* Vol.1, 22-32.

CRIM, K.R. 'Versions, English', *IDB*, Supplementary Volume, Nashville: Abingdon, 1962, 962-5.

CRYSTAL, D. 'Some Current Trends in Translation Theory' *TBT* 27 (1976), 322-9.

CRYSTAL, D. *Linguistics*, Harmondsworth: Penguin Books, 1971.

CULPEPPER, R.A. 'The Gospel of John and Jews' *R&E* 80:2 (1987), 273-88.

CULPEPPER, R.A. 'The New American Standard Bible', *R&E* 26:3 (1979), 351-62.

DAGUT, M.B. 'Can Metaphor be Translated?', *Babel* 12 (1973), 167-71.

DAGUT, M.B. 'Idioms', *Babel* 19:4 (1973).

DANIELL, D. ed., *Tyndale's New Testament*, New Haven: Yale University Press, 1989.

DANKER, F.W. 'Gains and Problems in N.T. Translation', *Dialog* 24:1 (1985), 49-50.

DARLOW, T.H. and MOULE, H.F. *Historical Ctalogue of Printed Editions of the English Bible, 1525-1961,* rev'd and expanded, A.S. Herbert, London: British & Foreign Bible Society, 1968.

DAVIES, P.R. 'Was There Really a Qumran Community?', in *Currents in Research: Biblical Studies* 3 (1995), 9-35.

DAVIES, W.D. 'Reflections on Thirty Years of Biblical Studies', *SJT* 39 (1986), 43-6.

DAVIES, W.D. *Paul and Rabbinic Judaism: Some Rabbinic Elements in Pauline Theology*, 3rd ed., London: SPCK, 1970.

DE BLOIS, K. et al 'How to Translate the Name', *TBT* 43 (1992), 403-48.

DE HAMEL, C. *A History of Illuminated Manuscripts*, Oxford: Phardon, 1986.

DE VAUX, R. *The Bible and the Ancient Near East,* London: Darton, Longman and Todd, 1972.

DE WAARD, J. 'Biblical Metaphors and their Translation', *TBT* 25 (1975), 107-16.

DE WAARD, J. 'Review of Aryeh Newman: *Mapping Translation Equivalence*', *TBT* 34:3 (1983), 339-41.

DE WAARD, J.and NIDA, E.A. *From One Language to Another: Functional Equivalence in Bible Translating*, Nashville: Thomas Nelson Publishers, 1986.

DEISSMANN, A. *Licht vom Osten*, Tübingen: Mohr, 1908 (translated as *Light from the Ancient East* by L.R.M. Strachan, this edition New York: Harper, 1927).

DEISSMANN, A. *Light from the Ancient East*, New York: Harper, 1922.

DEISSMANN, A. *The New Testament in the Light of Modern Research: The Haskell Lectures, 1929*, Garden City, NY: Doubleday, Doran & Co, 1929.

DERRIDA, J. 'Living on' and 'Border Lines', tr. James Hulbert, in H. Bloom, *Deconstruction and Criticism,* New York: Seabury Press, 1979.

DIMANT, D. 'The Problem of Non Translated Biblical Greek' in COX, C.E., ed., 1987, 1-19.

DIRKSEN, P.B. 'The Old Testament Peshitta', in MULDER, M.J. and SYSLING, H., eds., 1988, 225-98.

DODD, C.H. 'Introduction', *The New English Bible with Apocrypha*, Oxford University Press & Cambridge University Press, 1970.

DODD, C.H. 'Some Problems of NT Translation', *Exp T* 72 (1960), 268-274.

DODD, C.H. 'The Translation of the Bible, Some Questions of Principle', *TBT* 11 (1960), 4-9.

DODD, C.H. *The Bible and the Greeks*, London: Hodder and Stoughton, 1935.

DODD, C.H. *The Interpretation of the Fourth Gospel*, Cambridge: Cambridge University Press, 1953.

DOLET, E. *La manière de bien traduire d'une langue en autre* (1540)

DRINKWATER, J. *The Outline of Literature*, London: George Newness, 1950

DRYDEN, J. *Preface to Ovid's Epistles*, London: Jacob Tonsin, 1680

DUFF, A.L. *The Third Language*, Oxford: Pergamon Press, 1981.

DUMBRELL, W.J. 'Daniel 7 and the Function of OT Apocalyptic', *RTR* 34 (1975), 16-23.

DUNN, J.D.G. *Romans 1-8*, (WBC), Dallas: Word Books, 1988.

DUTHIE, A.S. *How to Choose Your Bible Wisely*, rev'd ed., Swindon: Bible Society and Carlisle: Paternoster, 1995.

EAGLETON, T. *Literary Theory: An Introduction*, Oxford: Blackwell, 1983.

ELLER, V. *Language of Canaan and the Grammar of Feminism*, Grand Rapids: Wm.B. Eerdmans, 1982.

ELLINGTON, J. 'More on 'Shibboleth'', *TBT* 43 (1992), 244-5.

ELLINGTON, J. 'Translating 'Shibboleth' and 'Sibboleth'', *TBT* 41 (1990), 446

ELLINGWORTH, P 'Scope of Inclusive Language', *TBT* 43 (1992)

ELLINGWORTH, P. 'Exegetical Presuppositions in Translation', *TBT* 33 (1982), 317-23.

ELLINGWORTH, P. 'The LORD: The Final Judge of Functional Equivalence', *TBT* 41:3 (1990), 345-50.

ELLINGWORTH, P. 'Talking about Translations', *TBT* 23 (1972), 219-24.

ELLINGWORTH, P. 'Translating the Bible Inclusively', *Meta* 27 (1987)

ELLINGWORTH, P. *Commentary on Hebrews* (NIGTC), Grand Rapids: Wm.B. Eerdmans, 1993.

ELLINGWORTH, P.and NIDA, E. A. *A Translator's Handbook on Paul's Letters to the Thessalonians, Helps for Translators*, Vol. XVIII, Stuttgart: United Bible Societies, 1975.

ELLIOTT, J.K., ed. *Studies in New Testament Language and Text* Leiden: E.J. Brill, 1976.

ELLIOTT, J.K. *The Language and Style of the Gospel of Mark.* Leiden: E.J.Brill, 1993.

ELLIOTT, N. *The Rhetoric of Romans*, JSNT Supplement Series 45, Sheffield: JSOT Press, 1990.

ELLIS, E. E. 'Biblical Interpretation in the New Testament Church', in MULDER, M.J. and SYSLING, H., eds., 1988, 691-725.

ELSON, B.F., ed. *Language in Global Perspective: Papers in Honour of the 50th Anniversary of the Summer Institute of Linguistics 1935-1985*. Dallas: SIL, 1986.

EMPSON, W. *Seven Types of Ambiguity*, London: Hogarth Press, 1984.

ENKVIST, N.E. *Linguistic Stylistics*, The Hague: Mouton, 1973.

EVANS, I. *A Short History of English Literature*, London: Penguin, 1940.

EWERT, D. *From Ancient Tablets to Modern Translations: A General Introduction to the Bible*, Grand Rapids: Zondervan, 1983.

FABER, R.A. 'The Juridical Nuance in the NT Use of ΠΡΟΣΩΠΟΛΗΜΨΙΑ', *WTJ* 57 (1995), 289-297.

FALK, M. *Love Lyrics from the Bible*, Sheffield: The Almond Press, 1982.

FEHDERAU, H. 'The Role of Bases & Models in Bible Translations', *TBT* 30 (1980), 401-19

FENSHAM, F.C. *The Bible in Basic English*. Cambridge: Cambridge University Press, 1949.

FENTOR, F. *The Holy Bible in Modern English*. London: Partridge and Co., 1910.

FILSON, F. V. 'Translate the Septuagint', *Festschrift to Honour F.W. Gingrich*, ed. E.H. Barth and R. Cocraft, Leiden: E.J. Brill, 1972.

FIORENZA, E. S. 'The Ethics of Interpretation: Decentering Biblical Scholarship', *JBL* 107:1 (1988), 3-17 (S.B.L. Presidential Address).

FIRBAS, J. 'A Case Study in the Dynamics of Written Communication' in KASTOVSKY, D. and SZWEDEK, A., eds., 1986, 859-73.

FIRTH, J.R. 'Linguistic Analysis and Translation', *For Roman Jakobson: Essays on the Occasion of his Sixtieth Birthday*, The Hague: Mouton, 1956, 133-9.

FIRTH, J.R. *Papers in Linguistics 1934-51*, Oxford: Oxford University Press, 1951.

FIRTH, J.R. *Selected Papers 1952-1959*, ed. F.R. Palmer, London: Longmans, 1968.

FISHBONE, M. *Text and Texture: Close Readings of Selected Biblical Texts*, New York: Schocken, 1979.

FITZMYER, J.A. 'The Languages of Palestine in the First Century AD', *CBQ* 32 (1970), 501-31.

FITZMYER, J.A. *A Wandering Aramean: Collected Essays*, Missoula, MT: Scholars Press, 1979.

FITZMYER, J.A. *Essays on the Semitic Background of the New Testament*, London: G. Chapman, 1971.

FITZMYER, J.A. *Romans: A New Translation with Introduction and Commentary*, (Anchor Bible 33), New York and London: Doubleday, 1993.

FOWLER, R.M. *Loaves and Fishes: The Function of the Feeding Stories in the Gospel of Mark*, SBLDS 54, Chico, CA: Scholars Press, 1981.

FOX, E. 'A Buber-Rosenzweig Bible in English' *Amsterdamse cahiers voor exegese en Bijbelse theologie* 2 (1981), 9-22.

FOX, E. *Genesis and Exodus*. New York: Schocken Books, 1991.

FOX, E. *In the Beginning: A New English Rendition of The Book Of Genesis*. New York: Schocken, 1983.

FROST, D. *Making The Liturgical Psalter*, Bramcote, Notts: Grove Books, 1981.

FROST, D.L., EMERTON, J. and MACINTOSH, A. *The Psalms: A New Translation for Worship*, London: Collins, 1977.

FRY, E. 'Current Trends in Scripture Translation', *UBS Bulletin* 124/5, Stuttgart, 1981, 3-16.

FRYE, N. *The Great Code: The Bible and Literature*, San Diego: Harcourt, Brace and Jovanovich, 1983.

FRYER, N.S.L. 'The Meaning and Translation of *Hilasterion* in Romans 3:25', *EQ* 59:2 (1987), 99-116.

FUETER, P. 'The Therapeutic Language of the Bible', in *IRM* 75 (No. 299) (1986), 211-21.

FULLER, F. *The Translator's Handbook*, (2nd ed.), Gerrards Cross, Bucks.: Colin Smythe Ltd, 1984.

FULLER, R.C. 'The Douay Bible', *Scripture Bulletin* 15:1, (1984)

GEHMAN, H.S. 'The Hebraic Character of Septuagint Greek', *VT* 1 (1951), 82-90.

GENTZLER, E. *Contemporary Translation Theories*. London and New York: Routledge, 1993.

GINGRICH, F.W. 'The Greek New Testament as a Landmark in the Course of Semantic Change', *JBL* (1954), 189-196.

GLEASON, H.A. Jr. *Linguistics and English Grammar*, New York: Holt, Rinehart and Winston, 1965.

GOODING, D.W. 'Text and Versions: The Septuagint', *NBD*, 1258-61.

GRANT, F.C. *An Introduction to the Revised Standard Version of the New Testament*, L.A. Weigle, ed., New York: International Council of Religious Education, 1946.

GRANT, F.C. and ROWLEY, H.H., eds. *Hastings Dictionary of the Bible,* 2nd ed., revised, Edinburgh: T & T Clark, 1963.

GRANT, F.C. *Translating the Bible,* Greenwich Conn.: Seabury Press, 1961.

GRANT, R. (with David Tracy) *A Short History of the Interpretation of the Bible* (2nd edition), London: S.C.M, 1984.

GREEN, J.B., MCKNIGHT, S., and MARSHALL, I.H., eds., *Dictionary of Jesus and the Gospels,* Downers Grove, Illinois: InterVarsity Press, 1992.

GREENFIELD, S.B. and CALDER, D.G. *A New Critical History of Old English Literature*, New York and London: New York University Press,1986.

GREENSLADE, S.L., ed. *Cambridge History of the Bible, Vol. III: The West from the Reformation to the Present Day*, London: Cambridge University Press, 1963.

GREENSTEIN, E.L. 'Biblical Narratology', *Proof texts* 1.2 (1981), 201-8.

GREENSTEIN, E.L. 'Theories of Modern Bible Translation', *Prooftexts* 3.1 (1983).

GUELICH, R.A. *Mark 1-8:26*, (WBC) Dallas: Word Books, 1989.

GUNDRY, R.H. *Mark: A Commentary on his Apology for the Cross*, Grand Rapids: Wm.B. Eerdmans, 1993.

GUNKEL, H. *Einleitung in die Psalmen*, Göttingen, 1966.

GUNN, D.M. and FEWELL, D.N. *Narrative in the Hebrew Bible,* Oxford: Oxford University Press, 1993.

GUTT, E-A., 'What is the Meaning we Translate?', *Occasional Papers in Translation and Text Linguistics,* No.1 (1987), 31-58.

GUTT, E-A. *Relevance Theory: A Guide to Successful Communication in Translation,* Dallas and New York: Summer Institute of Linguistics and United Bible Societies, 1992.

GUTT, E-A. *Translation and Relevance: Cognition and Context.* Oxford: Blackwell, 1991.

HAAS, W. 'The Theory of Translation', in *The Theory of Meaning,* G.H.R. Parkinson, ed., Oxford: Oxford University Press, 1968, 86-108.

HADAS, M. *Aristeas to Philocrates*, New York and London: Harper and Row, 1951.

HAGEGE, C. 'Translating, the linguist and the meeting of cultures', (tr. J. Ferguson), *Diogenes* 137 (1987), 26-38.

HAGNER, D.A. *The Jewish Reclamation of Jesus*, Grand Rapids: Zondervan, 1984.

HALLIDAY, M.A.K. 'Language Structure and Language Functions' in LYONS, J.H., ed., 1970, 140-65.

HALLIDAY, M.A.K. 'Some Notes on "Deep Grammar"', *Journal of Linguistics* 2 (1966), 57-68.

HALLIDAY, M.A.K. 'The Linguistic Study of Literary Texts', in *Essays on the Language of Literature*, S. Chatman and S.R. Levin, eds., Boston: Houghton Mifflin Co., 1967.

HALLIDAY, M.A.K. *An Introduction to Functional Grammar,* London: Edward Arnold, 1985.

HALLIDAY, M.A.K. *Explorations in the Functions of Language*, London: Edward Arnold, 1973.

HALLIDAY, M.A.K. *Halliday: System and Function in Language*, G.R. Kress, ed., Oxford: Oxford University Press, 1976.

HALLIDAY, M.A.K. and HASAN, R. *Cohesion in English,* London: Longmans, 1976.

HARBISON, E.H. *The Christian Scholar in the Age of the Reformation*, Grand Rapids: Wm.B. Eerdmans, 1983 (reprint of 1956 ed.).

HARGREAVES, C. *A Translator's Freedom: Modern English Bibles and Their Language,* Sheffield: JSOT Press, 1993.

HATIM, B. 'Text Worlds in Transition: Orality and Text Structure in Translation', unpublished address to Applied Linguistics Association of Australia Conference, Sydney, October 1996.

HATIM, B and MASON, I. *Discourse and the Translator,* London and New York: Longman, 1990.

HAUGERUD, J. *The Word For Us,* Seattle: Coalition on Women and Religion, 1977.

HAWTHORNE, G.F., MARTIN, R.P., and REID, D.G., eds. *Dictionary of Paul and His Letters,* Downers Grove, Illinois: InterVarsity Press, 1993.

HEFNER, P. et al 'A Theological Colloquium on 'An Inclusive Language Lectionary", *Dialog* 24:1 (1985), 41-51.

HEMER, C. 'Reflections on the Nature of New Testament Greek Vocabulary', *TB* 38 (1987), 65-92.

HENN, T.R. *The Bible as Literature*, New York: Lutterworth and Oxford University Press, 1970.

HESS, R.S.and TSUMURA, D.T. *'I Studied Inscriptions from Before the Flood': Ancient Near Eastern, Literary, and Linguistic Approaches to Genesis 1–11,* Winona Lake: Eisenbrauns, 1994.

HILL, D.W. *Greek Words and Hebrew Meanings: Studies in the Semantics of Soteriological Terms,* SNTSMS 5, Cambridge: Cambridge University Press, 1967.

HILLS, M.T. *The English Bible in America*, New York: American Bible Society, 1962.

HJELMSLEV, L. "Structural Analysis of Language" *Studia Linguistica* 1 (1947), 69-78.

HJELMSLEV, L. *Prolegomena to a Theory of Language* (trans F.J.Whitfield), Indiana University Publications in Anthropology and Linguistics Memoir 7.

HOCKETT, C.F. 'Chinese Versus English: An Exploration of the Whorfian Theses', in HOIJER, H., ed., 1954, 106-23.

HOCKETT, C.F. *The View from Language: Selected Essays 1948-1974*, Athens, GA: University of Georgia Press, 1977.

HOGG, W.R. 'The Scriptures in Christian World Mission', *Missiology* 12:4 (1984), 389-404.

HOIJER, H., ed. *Language in Culture*, Chicago: University of Chicago Press, 1954.

HOLLANDER, J. and KERMODE, F. *The Oxford Anthology of English Literature*, London: Oxford University Press, 1973.

HOLMES, J.S., LAMBERT, J., and VAN DEN BROEK, R. *Literature and Translation,* Louvain: Acco, 1978.

HOOK, S. *Language and Philosophy*, Ithaca, NY: Cornell University Press,1963.

HORSLEY, G.H.R. 'Divergent Views on the Nature of the Greek of the Bible', *Bib* 65 (1984), 393-403.

HORSLEY, G.H.R. *New Documents Illustrating Early Christianity,* Vols 1-5. Sydney: Macquarie University, 1981-89.

HOWARD, G. 'Romans 3:21-31 and the Inclusion of the Gentiles', *HTR* 63 (1970), 223-33.

HOWARD-HILL, T.H. *Literary Concordances*, Oxford: Pergamon, 1979.

HUDSON, A. *English Wycliffe Writings,* Cambridge: Cambridge University Press, 1978.

HUDSON, R.A. *Arguments for a Non Transformational Grammar,* Chicago: University of Chicago Press, 1976.

HUMBOLDT, W. *Über die Verschiedenheit des menschlichen Sprachbaues*, Berlin: Dumon Ier, 1836.

HURTADO, L.W. 'Gospel (Genre)', in GREEN, J.B., McKNIGHT, S., and MARSHALL, I.H., eds., 1992, 276-82.

ILSON, R., ed. *Lexicography,* Manchester University Press in association with Fulbright Commission, 1986.

IVIR, V. 'Formal Correspondence Vs Translation Equivalence Revisited', *Poetics Today*, 2:4 (1981).

JAKOBSON, R. 'Language in Relation to other Communication Systems', in *Selected Writings*, Vol.II, The Hague: Mouton, 1971, 259-70.

JAKOBSON, R. 'Linguistics and Poetics', in SEBEOK, T.,ed., 1960, 350-77.

JAKOBSON, R. 'On Linguistic Aspects of Translation' in BROWER, R.A., ed., 1966, 232-9.

JELLICOE, S., ed. *Studies in the Septuagint: Origins, Recensions and Interpretations*, New York: Ktav, 1974.

JELLICOE, S. *The Septuagint and Modern Study*, Oxford: Clarendon Press, 1968.

JEROME Letter 57 to Pammachius on "The Best Method of Translating" (395AD) in SCHAFF, P. and WACE, H., eds. *The Nicene and Post Nicene Fathers*, second series, Vol VI, New York: Christian Literature Company, 1893, 114-6.

JERVIS, L.A. and RICHARDSON, P., eds. *Gospel in Paul: Studies in Corinthians, Galatians, and Romans for Richard Longenecker*, JSNTS Supplement Series 108, Sheffield: Sheffield Academic Press, 1994.

JOHNSTON, G. 'The Language of the New Testament' in *A Companion to the Bible*, T.W. Manson and H.H. Rowley, eds., Edinburgh: T & T Clark, 1963, 19-26.

JORDAN, C. *The Cotton Patch Version of Luke and Acts,* New York: Association Press, 1969.

KAHLE, P. *The Cairo Geniza*, 2nd ed., Oxford: Basil Blackwell, 1959.

KANYORO, M. 'Indigenizing Translation', *TBT* 42 (1991) 47-56.

KÄSEMANN, E. *Commentary on Romans*, tr. and ed., G.W. Bromiley, Grand Rapids: Wm.B. Eerdmans, 1980.

KASSÜHLKE, R. 'Linguistic and Cultural Implications of Bible Translation', in BRISLIN, R.W., ed., 1976, 279-301.

KASSÜHLKE, R. 'Problems of Bible Translating in Europe Today', *TBT* 22:3 (1971), 121-7.

KASTOVSKY, D. and SZWEDEK, A., eds. *Linguistics Across Historical and Geographic Boundaries*, Vols. I and II (Trends in Linguistics Studies and Monographs 32), Berlin: Mouton de Gruyter, 1986.

KATOPPO, P.G. 'Translating NOMOS in Simplified Indonesian', *TBT* 42 (1991), 420-6.

KATZ, J.J. and FODOR, J.A. 'The Structure of a Semantic Theory', *Language* 39 (1963), 170-210.

KEDAR, B. 'The Latin Translations', in MULDER, M.J. and SYSLING, H., eds., 1988, 299-338.

KEE, H.C. *The Bible in the Twenty First Century*, ABS Symposium Papers, New York: American Bible Society, 1993.

KELLY, B.H. and MILLER, D.G. *Tools for Bible Study*, Richmond, VA: John Knox Press, 1956.

KELLY, J.N.D. *Jerome: His Life, Writings and Controversies*, London: Duckworth, 1975.

KELLY, L.G. *The True Interpreter: A History of Translation Theory and Practice in the West*, Oxford: Blackwell, 1979.

KERMODE, F. *The Genesis of Secrecy*, Cambridge, MA: Harvard University Press, 1979.

KIKAWADA, I.M. and QUINN, A. *Before Abraham Was: The Unity of Genesis 1-11*, Nashville, TN: Abingdon, 1985.

KITTAY, E.F. and LEHRER, A. 'Semantic Fields and the Structure of Metaphor', *Studies in Language* 5 (1981)

KITTEL, G. and FRIEDRICH, G., eds. *Theological Dictionary of the New Testament.*, tr. and ed. G. Bromiley, 9 vols., Grand Rapids: Wm.B. Eerdmans, 1964-74.

KLEIN, E. *A Comprehensive Etymological Dictionary of the English Language*, Amsterdam: Eisevier, 1966.

KLEIN, W.W., HUBBARD, R.L.Jnr, and BLOMBERG, C.L. *Introduction to Biblical Interpretation*, Dallas: Word Publishing, 1993.

KNOX, R. *On Englishing the Bible*, London: Burns and Oates, 1949.

KUBO, S. and SPECHT, W.F. *So Many Versions?*, rev. ed., Grand Rapids: Zondervan, 1983.

KUGEL, J. L. *The Idea of Biblical Poetry*, New Haven: Yale University Press, 1982.

KÜMMEL, W. G. *Introduction to the New Testament*, Nashville/New York: Abingdon Press, 1973.

LACHENMEYER, C.W. 'Literary, Conventional and Scientific Language Systems', *Journal of Literary Semantics* 1 (1972).

LAKOFF, G., JOHNSON, G. and JOHNSON, M. *Metaphors We Live By*, Chicago: Chicago University Press, 1980.

LAMPE, G.W.H., ed. *Cambridge History of the Bible, Vol. II: The West from the Fathers to the Reformation*, London: Cambridge University Press, 1969.

LANE, W. *The Gospel According to Mark* (NICNT), Grand Rapids: Wm.B. Eerdmans, 1974.

LAPIDE, P. *Hebrew in the Church* (translated from *Hebräisch in den Kirchen* 1976), Grand Rapids: Wm.B.Eerdmans, 1984.

LARSON, M.L. 'Indigenizing the Translation Process', *TBT* 42 (1991), 34-40.

LARSON, M.L. 'The Summer Institute of Linguistics and Translation', *TBT* 42:2 (1991), 27-34.

LARSON, M.L. *Meaning Based Translation: A Guide to Cross-Language Equivalence*, New York: University Press of America,, 1984.

LEANEY, A.C.R. *The Jewish and Christian World 200 BC - AD 200*, Cambridge: Cambridge University Press, 1984.

LEE, J.A.L. *A Lexical Study of the Septuagint Version of the Pentateuch*, Chico, CA: Scholars Press, 1983

LEECH, G. *Principles of Pragmatics*, London: Longmans, 1985.

LEECH, G. *Semantics*, London: Penguin Books, 1975.

LEFEVERE, A. 'Programmatic Second Thoughts on 'Literary' and 'Translation'', *Poetics Today* 2:4 (1981), 39-50.

LEFEVERE, A. 'The Translation of Literature', *Babel* 16:2 (1970).

LEIBIG, J.E. 'John and 'the Jews': Theological Antisemitism in the Fourth Gospel', *Journal of Ecumenical Studies* 20:2 (1983), 209-34.

LEVI, P. *The English Bible 1534-1859*, London: Constable, 1974.

LEVINSON, S.C. *Pragmatics*, Cambridge: Cambridge University Press, 1983.

LEWIS, C.S. 'Bluspels & Flalansferes' (1939), reprinted in *The Importance of Language,* Max Black, ed., Ithaca: Cornell University Press, 1962.

LEWIS, C.S. *Reflections on the Psalms*, London: Geoffrey Bles, 1958.

LEWIS, C.S. *Selected Literary Essays,* W. Hooper, ed., Cambridge: Cambridge University Press, 1969.

LEWIS, C.S. *The Literary Impact of the Authorized Version.* London: The Athlone Press, 1950.

LEWIS, J. *A Complete History of the Translations of The Holy Bible into English*, London: W. Baynes, 1818.

LIDDICOAT, A. 'Choosing a Liturgical Language: Language Policy and The Catholic Mass', *Aust Review of Applied Linguistics* 16:2 (1993), 123-41.

LINDBERG, C. *The Middle English Bible*, 2 vols, Oslo: Universitetsforlaget, 1985.

LINDSEY, H. and CARLSON, C.C. *The Late Great Planet Earth*, Grand Rapids: Zondervan, 1970.

LIU, L.G. 'Reasoning Counterfactually in Chinese: Are There Any Obstacles', *Cognition* 21 (1985), 239-70.

LOEWEN, J. A. 'Form and Meaning in Translation', *TBT* 22:4 (1971)

LOH, I-J. and NIDA, E.A. *A Translator's Handbook on Paul's Letter to the Philippians, Helps for Translators,* London: United Bible Societies, 1977.

LOHSE, E. 'Ευαγγέλιον Θεοῦ: Paul's Interpretation of the Gospel in his Epistle to the Romans', *Bib* 76:1 (1995), 127-40.

LONG, V.P. *The Art of Biblical History,* Grand Rapids: Zondervan, 1988.

LONGMAN III, T. *Literary Approches to Biblical Interpretation*, Grand Rapids: Zondervan, 1987.

LOUW, J.P. *Lexicography and Translation*, Capetown: Bible Society of South Africa, 1985.

LOUW, J.P. *Semantics of New Testament Greek*, Philadelphia: Fortress Press, 1982.

LOUW, J.P. *Sociolinguistics and Communication*, Stuttgart: United Bible Societies Monograph Series No. 1, 1986.

LOUW, J.P. AND NIDA, E.A., eds. *Greek-English Lexicon of the New Testament Based on Semantic Domains,* 2 vols, New York: United Bible Societies, 1988.

LUND, J.A. 'The Language of Jesus', *Mishkan* 17-18 (1992-93), 130-155.

LUTHER, M. *Ein Sendbrief von Dolmetschen*, Wittenberg: Georg Rhaw, 1530.

LUZBETAK, L. 'Roman Catholics, Bible Societies and Bible Translation', *TBT* 42 (1991), 41-47.

LYALL, F. *Slaves, Citizens, Sons: Legal Metaphors in the Epistles*, Grand Rapids: Zondervan, 1984.

LYONS, J. *Introduction to Theoretical Linguistics*, Cambridge: Cambridge University Press, 1968.

LYONS, J., ed. *New Horizons in Linguistics*, Harmondsworth: Penguin, 1970.

LYONS, J. *Semantics*, 2 vols, Cambridge: Cambridge University Press, 1977.

LYS, D. 'L'impossible possibilité de la traduction ou le loi du traducteur', *ETR* 56:2 (1981), 269-279.

LYS, D. 'Traduire' in *ETR* 55:4 (1980), 594-7.

MAJOLA, A.O. 'Theories of Metaphor in Translation', *TBT* 44 (1993), 341-7.

MALINOWSKI, B. 'The Problem of Meaning in Primitive Languages', Supplement I in OGDEN, C.K. and RICHARDS, I.A., 1935, 296-346.

MARSHALL, I.H. 'The Development of the Concept of Redemption in the New Testament' in *Reconciliation and Hope*, R. Banks, ed., Exeter: Paternoster Press, 1974, 153-69.

MARSHALL, I.H., ed. *New Testament Interpretation*, Exeter: Paternoster Press, 1977.

MARSHALL, I.H. 'Culture and the New Testament', an unpublished paper, 1977.

MARTIN, R.P. *Accuracy of Translation and the New International Version*, Edinburgh: The Banner of Truth Trust, 1989.

MARTY, M. 'America's Iconic Book' in TUCKER, G.N. and KNIGHT, D.A., eds., 1982.

MASTERMAN, M. 'Bible Translation by Kernel', in *Times Literary Supplement*, 19.3.1970, 299-301.

MASTERMAN, M. 'Translating the Bible',*Theoria to Theory* 4 (1970), 7f.

MATERA, F.J. *What are They Saying about Mark?*, New York: Paulist Press, 1987.

McCARTER, P.K., Jr. *II Samuel: A New Translation, with Introduction, Notes and Commentary* (Anchor Bible), New York: Doubleday, 1984.

McKAY, K.L. 'Syntax in Exegesis', *TB* 23 (1972), 39-57.

McKNIGHT, E.V. 'Is the NT Written in 'Holy Ghost' Greek?' *TBT* 16 (1965), 87-93.

MESCHONNIC, H. *Pour la Poetique II*, Paris: Gallimard,1973.

METZGER, B.M. 'The Language of the New Testament' in *The Interpreter's Bible, VII*, New York/Nashville: Abingdon-Cokesbury Press, 1951, 43-59.

METZGER, B.M. and COOGAN, M.D. *The Oxford Companion to the Bible*, New York: Oxford University Press, 1992.

METZGER, B.M. *The Early Versions of the New Testament*, Oxford: Clarendon Press, 1977.

METZGER, B.M. *The Text of the New Testament*, 3rd ed., New York: Oxford University Press, 1992.

METZGER, B.M., ed. *A Textual Commentary in the Greek New Testament: A Companion Volume to the UBS Greek New Testament (4th Revised Edition)*, Suttgart: United Bible Societies, 1994.

METZGER, B.M., ed. *A Textual Commentary on the Greek New Testament: A Companion Volume to UBS Greek New Testament (3rd edition)*, London: United Bible Societies, 1971.

METZGER, B.M., DENTON, R.C., and HARRELSON, W. *The Making of the New Revised Standard Version of The Bible*. Grand Rapids: Wm.B. Eerdmans, 1991.

MOFFATT, J. *A Critical and Exegetical Commentary on the Epistle to the Hebrews* (ICC), Edinburgh: T & T Clark, 1924.

MOO, D. *Romans 1–8*, Chicago: Moody Press, 1991.

MOODY, D. 'The Good News Bible', *R&E* 76:3 (1979), 409-16.

MOORE, R.K. 'The Doctrine of 'Justification' in the English Bible', *TBT* 45 (1994), 101-16.

MORRIS, L. *Revelation,* 2nd ed., Tyndale NT Commentaries, Leicester: IVP and Grand Rapids: Wm.B. Eerdmans, 1987.

MORRIS, L. *The Apostolic Preaching of the Cross*, London: Tyndale Press, 1955.

MOULE, C.F.D. *An Idiom-Book of New Testament Greek*, 2nd ed., Cambridge: Cambridge University Press, 1959.

MOULTON, H.K. *The Challenge of the Concordance*, London: Samuel Bagster, 1977.

MOULTON, J.H. *A Grammar of NT Greek, 1 Prolegomena.* Edinburgh: T & T Clark, 1908.

MOULTON, J.H. and MILLIGAN, G. *The Vocabulary of the Greek Testament*, Edinburgh: T & T Clark, 1930.

MOULTON, J.H. *From Egyptian Rubbish Heaps.* London: Chas. Kelly, 1916.

MOUNCE, R.H. *The Book of Revelation* (NICNT), Grand Rapids: Wm.B. Eerdmans, 1977.

MUDHENK, N. 'The Subjectivity of Anachronism' in BLACK, M. and SMALLEY, W., eds., 1974, 259-73.

MULDER, M.J. 'The Transmission of the Biblical Text', in MULDER, M.J. and SYSLING, H., eds., 1988, 87-135.

MULDER, M.J. and SYSLING, H., eds. *Mikra: Text, Translation, Reading and Interpretation of the Hebrew Bible in Ancient Judaism and Early Christianity* (*Compendium Rerum Iudaicarum ad Novum Testamentum*), Maastricht: Van Gorcum and Philadelphia: Fortress Press, 1988.

MULLEN, P. *The New Babel*, London: SPCK, 1987.

MURPHY, F.J. 'The Book of Revelation', *Currents in Research: Biblical Studies* 2, (1994), 181-225.

NADEN, T. 'Understandest Thou What Thou Readest?', *TBT* 33:3 (1982), 333-5

NEILL, S. and WRIGHT, N.T. *The Interpretation of the New Testament 1861-1986*, 2nd ed., New York: Oxford University Press, 1988.

NEWMAN, A. 'Componential Analysis and Functional Ambiguity Equivalence: Translating Exodus 32, 17-18', *Babel* 21:1 (1975), 29-35.

NEWMAN, A. 'Evaluating Bible Translation: A Linguistic Approach', *Forum* 5 (1978), 28-29, 160-72.

NEWMAN, A. 'Genesis 2:2: An Exercise in Interpretative Competence and Performance', *TBT* 27:1 (1976), 101-4.

NEWMAN, A. 'Semantic Mapping of a Text (Exodus 23:8)', *Meta* 23: 2 (1978), 158-64.

NEWMAN, B.M. 'Some Suggested Restructurings', *TBT* 25:2 (1974), 240-5.

NEWMAN, B.M. 'The Old Way and the New Way', *TBT* 28 (1977), 201-7.

NEWMAN, B.M. 'Translating "The Kingdom Of God" Outside The Gospels', *TBT* 29:2 (1978), 225-31.

NEWMAN, B.M. and ARICHEA, D.C. *Teori Terjemahan Dinamis*, Penyunting: P.G. Katoppo, Jakarta: Lembaga Alkitab Indonesia, 1987.

NEWMAN, B.M. and NIDA, E.A. *A Translator's Handbook on Paul's Letter to the Romans, Helps for Translators*, London: United Bible Societies, 1973.

NEWMAN, B.M. and NIDA, E.A. *A Translator's Handbook on the Acts of the Apostles, Helps for Translators*, London: United Bible Societies, 1972.

NEWMAN, B.M. and NIDA, E.A. *A Translator's Handbook on the Gospel of John, Helps for Translators*, London: United Bible Societies, 1980.

NEWMAN, J.H. *The Idea of a University*, London: Longmans Green & Co., 1852, 1923.

NEWMARK, P. 'An Approach to Translation', *Babel* 19:1 (1973), 3-19.

NEWMARK, P. 'The Theory and Craft of Translation', *Language Teaching and Linguistic Abstracts* 9:1 (1976).

NEWMARK, P. 'The Use of Systemic Linguistics in Translation Analysis and Criticism', in *Language Topics: Essays in Honour of Michael Halliday, Vol. 1*. Steele, R. and Threadgold, T., eds., Amsterdam: John Benjamins, 1987.

NEWMARK, P. *About Translation*. Clevedon: Multilingual Matters, 1991.

NEWMARK, P. *Approaches to Translation*, Oxford: Pergamon, 1981.

NEWMARK, P. *A Textbook of Translation*, London: Prentice Hall, 1988.

NICHOLS, A.H. 'Bible Translation and Gender Introduction: Modern Trends in Bible Translation', *Interchange* 45 (1989), 25-34.

NICHOLS, A.H. 'Dynamic Equivalence Bible Translations', *Colloquium* 19:1 (1986), 43-53.

NICHOLS, A.H. 'Explicitation in Translation and the Westernization of Scripture', *RTR* 47:3 (1988), 78-88.

NICHOLS, A.H. 'The Fate of 'Israel' in Recent Versions of the Bible', *In The Fullness of Time*, D. Petersen and J. Pryor, eds. Sydney: Lancer Press, 1992, 111-30.

NICOLE, R. "Hilaskesthai' Revisited', *EQ* 49:3 (1977), 173-7.

NIDA, E.A. 'A Framework for the Analysis and Evaluation of Theories of Translation' in BRISLIN, R.W., ed., New York: Gardner Press, 1976, 47-91.

NIDA, E.A. 'A New Methodology in Biblical Exegesis', *TBT* 3 (1952), 97-111.

NIDA, E.A. 'Communication and Translation', *TBT* 23 (1972), 309-16.

NIDA, E.A. 'Formal Correspondence', *TBT* 21 (1970), 105-13.

NIDA, E.A. 'Implications of Contemporary Linguistics for Biblical Scholarship', *JBL* 91 (1972), 73-89.

NIDA, E.A. 'Intelligibility and Acceptability in Bible Translating', *TBT* 39 (1988), 301-8.

NIDA, E.A. 'Language and Psychology', *TBT* 26 (1975), 308-13.

NIDA, E.A. 'Linguistics and Translators', *TBT* 23 (1972), 225-33.

NIDA, E.A. 'Paradoxes of Translating', *TBT* 42 (1991), 5-26.

NIDA, E.A. 'Rhetoric and Style: A Taxonomy of Structures and Functions', *Linguistic Studies* 6 (1984), 287-305.

NIDA, E.A. 'The Bible Translator's Use of Receptor-Language Texts', *TBT* 11 (1960), 82-6.

NIDA, E.A. 'The Nature of Dynamic Equivalence in Translating', *Babel* 23:3 (1977).

NIDA, E.A. 'Translating Means Communication' in *Linguistics and Anthropology* M. Saville-Troike, ed., Washington, DC: Georgetown University Press, 1977

NIDA, E.A. 'Translation or Paraphrase', *TBT* 1 (1950), 97-106.

NIDA, E.A. 'Translation' in SEBEOK, T., ed., 1974, 1045-68.

NIDA, E.A. 'UBS Trends in Translating', *TBT* 42 (1991), 2-5.

NIDA, E.A. *Bible Translating*, London: United Bible Societies, 1947/1961.

NIDA, E.A. *Componential Analysis of Meaning*, The Hague: Mouton, 1975.

NIDA, E.A. *Exploring Semantic Structures*, Munich: Fink Verlag, 1975.

NIDA, E.A. *God's Word in Man's Language*, New York: Harper & Brothers, 1952.

NIDA, E.A. *Good News for Everyone: How to Use the Good News Bible*, Waco: Word Books, 1977.

NIDA, E.A. *Language Structure and Translation*, Stanford: Stanford University Press, 1975.

NIDA, E.A. *Message and Mission*, New York: Harper and Row,1960.

NIDA, E.A. *Morphology: The Descriptive Analysis of Words*, Ann Arbor: University of Michigan Press, 1949.

NIDA, E.A. *Religion Across Cultures*, Pasadena, CA.: William Carey Library, 1968.

NIDA. E.A. *Signs, Sense, Translation*, Capetown: Bible Society of South Africa, 1984.

NIDA, E.A. *The Book of a Thousand Tongues*, 2nd ed., New York: United Bible Societies, 1972.

NIDA, E.A. *The Theory and Practice of Translation, Helps for Translators, Vol. VII*, Leiden: E.J. Brill, 1969.

NIDA, E.A. *Toward a Science of Translating: with Special Reference to Principles and Procedures Involved in Bible Translating*, Leiden: E.J. Brill, 1964.

NIDA, E.A. and DE WAARD, J. *From One Language to Another: Functional Equivalence in Bible Translating*, Nashville: Thomas Nelson, 1986.

NIDA, E.A. and LOUW, J.P. *Lexical Semantics of the Greek New Testament*, Atlanta: Scholars Press, 1992.

NIDA, E.A., LOUW, J.P., SNYMAN A.H. and CRONJE, J. *Style and Discourse*. Cape Town: Bible Society of South Africa, 1983.

NIDA, E.A. and REYBURN, W.D. *Meaning Across Cultures*, American Society of Missiology Series, No. 4, Maryknoll, NY: Orbis Books, 1981.

NIDA, E.A. and TABER, C.R. *The Theory and Practice of Translation, Helps for Translators, No. 8*, Leiden: E.J. Brill, for the United Bible Societies, 1969.

NOCK, A.D. 'The Vocabulary of the New Testament', *JBL* 52 (1933), 131-9.

NORRIS, C. *Contest of Faculties*, London: Methuen, 1985.

O'BRIEN, P.T. 'The Gospel in Philippians', in *God who is Rich in Mercy: Essays presented to Dr D.B. Knox*, P.T. O'Brien and D.G. Peterson, eds., Homebush West, NSW: Lancer Books, 1986, 213-33.

OGDEN, C.K. and RICHARDS, I.A. *The Meaning of Meaning*, 8th ed., London: Routledge and Kegan Paul, 1946 (1st ed. 1923).

OLAFSSON, S. *The LXX Version: A Guide to the Translation Technique of the Septuagint*, Coniectanea Biblica (OT) Series 30, Stockholm: Almqvist and Wiksell, 1991.

OLFORD, D. L. *An Exegetical Study of Major Texts in Romans which Employ Cultic Language in a Non-Literal Way*, Ph.D thesis, University of Sheffield, 1985.

OMANSON, R.L. 'Anti Jewish Bias of the NT', *TBT* 43 (1992), 301-13.

ONIONS, C.T., FRIEDRICHSEN, G.W.S., and BURCHFIELD, R.W., eds. *The Oxford Dictionary of English Etymology*, Oxford: Clarendon Press, 1966.

OSGOOD, C.E., SUCI, G.J., and TANNENBAUM, P.H., *The Measurement of Meaning*, 2nd ed., Urbana: University of Illinois Press, 1967.

PEI, M. *The Story of Language*, New York: Mentor, 1949.

PERLMUTTER, D.M. *Studies in Relational Grammar 1*, Chicago: Chicago University Press, 1985.

PETERSEN, D.L. *Haggai and Zechariah 1-8*, Philadelphia: Westminster and London: SCM, 1984.

PICCHIO, R. and GOLDBLATT, H., eds., *Aspects of the Slavic Language Question, Vol. 1*, Russian and East European Publications No. 4a, New Haven, Yale University Press, 1984.

PIKE, K. L. 'The Linguist and Axioms Concerning the Language of Scripture', *Interchange* 3:2 (1971), 77-84.

PIKE, K. L. and EVELYN, G. *Grammatical Analysis*, Arlington: University of Texas, 1977.

PONS, J. 'Traduire encore La Bible' *ETR* 58:3 (1983), 369-74.

PORTER, S.E. 'Did Jesus Ever Teach in Greek?', *TB* 44 (1993) 199-235.

PORTER, S.E. 'The Language of the Apocalypse in Recent Discussion', *NTS* 35 (1989), 582-603.

PORTER, S.E. *Idioms of the Greek New Testament,* Sheffield: Sheffield Academic Press, 1992.

PORTER, S.E. *Verbal Aspect in the Greek of the New Testament, with reference to Tense and Mood.* New York: Lang, 1993.

PORTER, S.E., ed. *The Language of the Greek New Testament: Classic Essays*, JSNT Supplement Series 60, Sheffield: Sheffield Academic Press, 1991.

PORTER, S.E. and CARSON, D.A. *Biblical Greek Language and Linguistics,* Sheffield: JSOT Press, 1993.

PORTER, S.E. and OLBRICHT, T.H. *Rhetoric and the New Testament*, JSNT Supplement Series 90, Sheffield: JSOT Press, 1993.

PORTER, S.E. and TOMBS, D., eds. *Approaches to New Testament Study,* JSNT Supplement Series 120, Sheffield: Sheffield Academic Press, 1995.

POYTHRESS, V.S. *Science and Hermeneutics*, Grand Rapids: Zondervan, 1988.

PRICKETT, S. 'The Status of Biblical Narrative', *Pacifica* 2:1 (1989), 26-46.

PRICKETT, S. 'What do the Translators Think They are Up To?', *Theology* 80 (1977), 403-10.

PRICKETT, S. *Words and 'The Word': Language, Poetics and Biblical Interpretation,* Cambridge: Cambridge University Press, 1986.

RABIN, C. 'Cultural Aspects of Bible Translation', *Babel* 18:3 (1972), 16-20.

RABIN, C. 'The Translation Process and the Character of the Septuagint', *Annual of the Hebrew University Bible Project*, S. Talmon, ed., Jerusalem: Hebrew University, 1968, 1-26.

RAUBER, D.F. 'Regii Sanguinis Clamor Ad Coelum: The Condition of Modern Translation', *CBQ* 32 (1970), 25-42.

RAY, V. 'The Formal vs the Dynamic Equivalent Principle in N.T. Translation', *Restoration Quarterly* 25:1 (1982), 46-55.

REBERA, B. 'Text to be spoken and heard', *TBT* 43 (1992), 230-5.

REISS, K. 'Adequacy and Equivalence in Translation', *TBT* 34:3 (1983), 301-8.

REUMANN, J. H. P. *The Romance of the Bible Scripts and Scholars: Chapters in the History of Bible Transmission and Translation,* Englewood Cliffs, NJ: Prenctice-Hall, 1965.

REUTHER, R. 'Feminism and Patriarchical Religion', *JSOT* 22 (1982)

RICOEUR, P. 'The Bible and the Imagination', *The Bible as a Document of the University*, H.D. Betz, ed. Chicago: Scholars Press, 1981, 49-75.

RIDDERBOS, N.H. 'Is het Hebreuws één van de bronnen van de openbaring?', *Geref. Theol. Tijdschrift* 8 (1964), 2-8.

RIEU, E.V. 'Translating the Gospels', *TBT* 6:4 (1955), 150-9.

ROBINS, R.H. *General Linguistics*, London: Longmans, 1964.

ROBINSON, D.W.B. 'Charismata versus Pneumatika: Paul's Method of Discussion', *RTR* 31 (1972), 49-55.

ROBINSON, D.W.B. '"Faith of Jesus Christ": A New Testament Debate', *RTR* 29 (1970), 71-81.

ROBINSON, D.W.B. 'The Distinction Between Jewish and Gentile Believers in Galatians', *ABR* 13 (1965), 29-48.

ROBINSON, D.W.B. 'The Priesthood of Paul in the Gospel of Hope', in *Reconciliation and Hope*, R.Banks, ed., Grand Rapids: Wm.B. Eerdmans, 1974, 321-45.

ROBINSON, D.W.B. 'Who were "the Saints"?', *RTR* 22 (1963), 45-53.

ROBINSON, D.W.B. *A Translation of the Bible for Public Worship,* Australian Anglican Bishops' Conference, April 1979.

ROBINSON, I. *The Survival of English* , Cambridge: Cambridge University Press, 1973.

ROBINSON, J.A.T. *Redating the New Testament,* London: S.C.M, 1976.

ROETZEL, C.J. 'Paul and the Law: Whence and Whither?', in *Currents in Research: Biblical Studies* 3 (1995), 249-75.

ROGERSON, J.W. *Beginning Old Testament Study.* London: SPCK, 1983.

ROGERSON, J.W. and DAVIES, P. *The Old Testament World.* Cambridge: Cambridge University Press, 1989.

ROGERSON, J., ROWLAND, C. and LINDARS, B., *The Study and Use of the Bible,* Basingstock: Marshall Pickering and Grand Rapids: Wm.B. Eerdmans, 1988.

ROGERSON, J.W. and STANTON, G.N. 'The Revised English Bible: New Wine in Old Wineskins?', *Theology* (1990), 38-45.

ROSE, M. G. *Translation Spectrum: Essays in Theory and Practice*, Albany: State University of New York Press, 1981.

RYDBECK, L. 'What Happened to NT Greek after Albert Debrunner?', *NTS* 21 (1975), 424-7.

SAFRAI, S. and STERN, M., eds. *The Jewish People in the First Century*, (2 vols), Assen/Amsterdam: Van Gorcum (for the Foundation Compendia Rerum Iudaicarum ad Novum Testamentum), 1976.

SAKENFELD, K.D. *The Meaning of Hesed in the Hebrew Bible: A New Inquiry*, HSM 17, Missoula, MT: Scholars Press, 1978.

SANDAY, W. and HEADLAM, A.C. *A Critical and Exegetical Commentary on the Epistle to the Romans,* 5th ed.(ICC), Edinburgh: T & T Clark , 1902.

SANDERS, E.P. 'Torah and Paul', in *God's Christ and His People: Studies in Honor of Nils Alstrup Dahl,* J. Jervell and W.A. Meeks, eds., Oslo: Universtitetsforlaget, 1977, 132-40.

SANDERS, E.P. *Paul and Palestinian Judaism,* Philadelphia: Fortress, 1977.

SANDERS, E.P. *Paul, the Law, and the Jewish People.* Philadelphia: Fortress Press, 1985.

SANDMEL, S. *A Jewish Understanding of the New Testament,* New York, 1974

SANNEH, L. *Translating the Message: The Missionary Impact on Culture,* Maryknoll, NY: Orbis Books, 1989.

SAUSSURE, F. de *A Course in General Linguistics*, London: Peter Owen, 1960

SAVOURY, T. *The Art of Translation* , 2nd ed., London: Jonathan Cape, 1968.

SAWYER, J. F.A. *Semantics in Biblical Research*, London: S.C.M, 1972.

SCHOEPS, H.J. *Paul: The Theology of the Apostle in the Light of Jewish Religious History,* Philadelphia: Westminster Press, 1961.

SCHONFIELD, H.J. *The Original New Testament.*, New York: Harper & Row, 1985.

SCHRAM, T. L. *The Use of the Word 'Ioudaios' in the Fourth Gospel: an Application of some Linguistic Insights to a New Testament Problem,* ThD Thesis, University of Utrecht, Ann Arbor: University Microfilms, 1974.

SCHULZE, G. *Effective Impact in Dynamic Equivalence Translation with Special Reference to the Imbabura New Testament* , Ph.D dissertation for Fuller Theological Seminary, Pasadena, 1979.

SCHUSSLER-FIORENZA, E. *The Book of Revelation: Justice and Judgement.* Philadelphia: Fortress Press, 1985.

SCHWARZ, W. *Principles and Problems of Biblical Translation: Some Reformation Controversies and their Background*, Cambridge: Cambridge University Press, 1955.

SEARLE, J. 1979. *Expression and Meaning*, Cambridge: Cambridge University Press,

SEARLE, J. *Intentionality*, Cambridge: Cambridge University Press, 1983.

SEARLE, J. *Speech Acts*, Cambridge: Cambridge University Press, 1969.

SEBEOK, T., ed. *Current Trends in Linguistics, Vol 12*, The Hague: Mouton, 1974

SEBEOK, T. *Style in Language*, Cambridge, MA: MIT Press, 1960.

SEVENSTER, J.N. *Do You Know Greek? How Much Greek Could the First Jewish Christians Have Known?* Nov T Sup 19, Leiden: E.J. Brill, 1968.

SHAW, R. D. *Transculturation: the Cultural Factor in Translation and Other Communication Tasks*, Pasadena, CA: William Carey, 1988.

SHIGEO, T. 'Levels of Style in Japanese', *TBT* 22 (1971), 49-57.

SHIRES, H. M. *Finding the Old Testament in the New*, Philadelphia: Westminster Press, 1974.

SHUGER, D.K. *The Renaissance Bible: Scholarship, Sacrifice and Subjectivity*. Berkeley: University of California Press, 1994.

SIERTSEMA, B. 'Language and World View', *TBT* 20 (1969), 3-20.

SIERTSEMA, B. 'Linguistic De-Stigmatization?' in BLACK, M. and SMALLEY, W., eds., 1974, 315-36.

SILVA, M. 'Bilingualism and the Character of Palestinian Greek', *Bib* 61(1980), 198-219.

SILVA, M. 'Contemporary Theories of Biblical Interpretarion', *NIB* Vol.1, 1994, 107-24.

SILVA, M. 'Semantic Borrowing', *NTS* 22 (1976), 104-10.

SILVA, M. *Biblical Words and Their Meaning: An Introduction to Lexical Semantics,* rev'd ed., Grand Rapids: Zondervan, 1994 (1st ed., 1983).

SILVA, M. *God, Language and Scripture: Reading the Bible in the Light of General Linguistics,* Grand Rapids: Zondervan,1990.

SILVA, M. *Has the Church Misread the Bible?* Grand Rapids: Zondervan, 1987

SIMON, M. *Verus Israel,* 3rd ed., tr. H. McKeating, Oxford: Oxford University Press, 1986.

SIMPSON, E.K. *Words Worth Weighing in the Greek New Testament,* London: Tyndale Press, 1944.

SKILTON, J.H. and LADLEY, C. A., eds., *The New Testament Student and Bible Translation*, Phillipsburg, NJ: Presbyterian and Reformed, 1978.

SMALLEY, W. A. 'The Place of Linguistics in Bible Translation', *TBT* 16 (1965), 105-11.

SMALLEY, W. A. 'Translating the Psalms as Poetry', in BLACK, M. and SMALLEY, W., eds., 1974, 336-71.

SMALLEY, W.A. *Translation as Mission: Bible Translation in the Modern Missionary Movement*t, Macon, GA: Mercer University Press, 1991.

SMITH, C.R. 'The Structure of the Book of Revelation in Light of Apocalyptic Literary Conventions', *NovT* 36 (1994), 373-93.

SMITH, R.L. *Micah–Malachi* (WBC), Waco: Word Books, 1984.

SMITH, V. and KLEIN-BRALEY, C. *In Other Words: Arbeitsbuch Übersetzung*. München: Max Hüber Verlag, 1985.

SMITH, W. C. *Islam in Modern History*, New York: Princeton University Press, 1957.

SNELL-HORNBY, M. *Translation Studies: An Integrated Approach,* Amsterdam/Philadelphia: John Benjamins Publishers, 1988.

SOEPOMO, G. 'Problems in Translation', unpublished paper, Salatiga, Indonesia, 1977.

SOESILO, D. 'Poetic Sections of Daniel', *TBT* 41 (1990), 432-6.

SOESILO, D. 'Satu Alkitab Berbagai Terjemahan', *Gerakan Oikumeme: Buku Peringatan* 40, 1990.

SOESILO, D. and UGANG, H. 'Are Honorific Terms of Address Necessary in the Indonesian Bible?', *TBT* 42 (1991), 442-6.

SPARKS, H.F.D. *On Translations of the Bible*, London: Athlone Press, 1973.

SPERBER, D. and WILSON, D. *Relevance: Communication and Cognition*, Oxford: Basil Blackwell, 1986.

STANTON, E.C. *The Women's Bible*, Seattle: Coalition on Women and Religion, 1985.

STEINBERG, D.D. and JAKOBOVITS, L.A., eds. *Semantics,* Cambridge: Cambridge University Press, 1971.

STEINER, G. *After Babel: Aspects of Language and Translation,* London: Oxford University Press, 1975 (2nd ed. 1992).

STEINER, G. *Language and Silence,* New York: Atheneum Press, 1970.

STEINER, G. *On Difficulty and Other Essays,* Oxford: Oxford University Press, 1978.

STENDAHL, K. *Meanings: The Bible as Document and Guide*, Philadelphia: Fortress Press, 1984.

STERK, J. 'Translation as Recreation', *TBT* 45 (1994), 129-39.

STIENSTRA, N. *YHWH is the Husband of His People*, Kampen: Kok Pharos, 1993.

STINE, P. 'Trends in Translation', *TBT* 46:1 (1995), 141-6.

STINE, P.C., ed. *Bible Translation and the Spread of the Church in the Last 200 Years*, Leiden: E.J. Brill., 1990.

STOTT, J.R.W. *The Epistles of John*, 2nd ed., Tyndale NT Commentaries, Leicester: Inter-Varsity Press and Grand Rapids: Wm.B. Eerdmans, 1988.

STUHLMUELLER, C. *Haggai and Zechariah: Rebuilding with Hope*, Grand Rapids: Wm.B. Eerdmans, 1988.

SUPARDAN, and KATOPPO, P.G., eds. *Firman Allah Harapan Bagi Semua: 360 Tahun Penerbitan Pertama Bagian Alkitab dalam Bahasa Indonesia*, Jakarta: Lembaga Alkitab Indonesia, 1989.

SUWITO, E. T. 'Translating the New Testament' in *Theology and Ministry in South East Asia*, Yeow Choo Lak, ed., Singapore: Trinity Theological College, 1978.

SUWITO, E. T. *Some Basic Problems in the Analysis and Communication of the Biblical Message through Translation in a Malaysian Milieu*, Unpublished MTh Thesis, SE Asian Graduate School of Theology, Singapore, 1981.

SVEJKOVSKY, F. 'The Conception of the 'Vernacular' in Czech Literature and Culture of the Fifteenth Century', in PICCHIO, R. and GOLDBLATT, H., 1984.

SWELLENGREBEL, J. L. 'The Bible in Bahasa Indonesia', *TBT* 5:3 (1954), 130-6.

SWELLENGREBEL, J.L. *In Leijdeckers Voetspoor, Vols. I (1820-1900) and II (1900-1970)*, Harlem: Nederlands Bijbelgenootschap, 1974,1978.

TABER, C. 'Dynamic Equivalence Revisited' *NOT* 2:3 (1988), 52-4.

TABER, C. 'Explicit and Implicit Information in Translation', *TBT* 21 (1970), 1-9.

TABER, C. 'Semantics', in *IDB* Supplementary Volume, Nashville: Abingdon, 1976, 800-7.

TABER, C. 'Translation as Interpretation', *Interpretation* 32 (1978), 130-43.

TAL, A. 'The Samaritan Targum of the Pentateuch', in MULDER, M.J. and SYSLING, H., eds., 1988, 189-216.

TALBERT, C.H. 'What is a Gospel?', *Semeia* 43 (1988), 53-73.

TCHERIKOVER, V. *Hellenistic Civilization and the Jews*, tr.S. Applebaum , New York: Atheneum, 1959.

TEEUW, A. *A Critical Survey of Studies on Malay and Bahasa Indonesia*, Den Haag, 1961.

TERASAWA, Y. 'Hebrew loan words in English' in KASTOVSKY, D. and SZWEDEK, A., eds., 1986, 661-8.

THISELTON, A. C. 'Semantics and New Testament Interpretation', in MARSHALL, I.H., ed., 1977, 75-104.

THOMPSON, S. *The Apocalypse and Semitic Syntax*, SNTSMS 52, Cambridge: Cambridge University Press, 1985.

TOMSON, P.J. 'The Names of "Israel" and "Jew" in Ancient Judaism and in the New Testament, I', *Bijdragen* 47 (1986), 120-40.

TOMSON, P.J. 'The Names of "Israel" and "Jew" in Ancient Judaism and in the New Testament, II', *Bijdragen* 47 (1986), 266-89.

TOV, E. 'The Nature and Study of the Translation Technique of the LXX in the Past and the Present' in COX, C.E., ed., 1987, 337-59.

TOV, E. 'The Representation of the Causative Aspects of the Hiph'il in the LXX', *Bib* 62 (1982), 417-24.

TOV, E. 'The Septuagint', in MULDER, M.J. and SYSLING, H., eds., 1988, 161-87.

TOV, E. 'Three Dimensions of Septuagint Words', *Revue Biblique* 4 (1983), 76.

TOV, E. *Textual Criticism of the Hebrew Bible*, Minneapolis: Fortress Press, 1992

TRANSLATOR'S NEW TESTAMENT, London: British and Foreign Bible Society, 1973.

TRITES, A.A. *The New Testament Concept of Witness*, SNTSMS 31, Cambridge: Cambridge University Press, 1977.

TSUMURA, D.T. 'The Earth in Genesis 1', in HESS, R.S. and TSUMURA, D.T., eds., 1994, 310-28.

TUCKER, G.M. and KNIGHT, D.A., eds. *Humanizing America's Iconic Book*, Chico, CA.: Scholars Press, 1982.

TURNER, N. 'The Literary Character of New Testament Greek', *NTS* 20 (1974), 107-14.

TURNER, N. *A Grammar of New Testament Greek, Vol. III: Syntax*, Edinburgh: T & T Clark, 1963.

TURNER, N. *A Grammar of New Testament Greek, Vol. IV:Style*, Edinburgh: T & T Clark, 1976.

TURNER, N. *Christian Words*, Edinburgh: T & T Clark, 1980.

TURNER, N. *Grammatical Insights into the New Testamen*t, Edinburgh: T & T Clark, 1965.

TURNER, N. 'The Language of the New Testament', in *Peake's Commentary on the Bible*, BLACK, M. and ROWLEY, H.H., eds. London: Thomas Nelson, 1962, 659-62.

TURRO, J. C. *The Trend and Character of German Bible Translation*, New York University PhD, University Micro Films International, London,1980.

TYTLER, A.F. *Essay on the Principles of Translation*, London: Dent, 1790.

UGANG, H. and SOESILO, D. 'Are Honorific Terms Necessary in the Indonesian Bible?' *TBT* 42:4 (1991), 442-7.

UHLENBECK, E.M. *A Critical Survey of Studies on the Languages of Java and Madura*, Den Haag, 1964.

UHLENDORFF, E. *Ethiopia and the Bible*, London: Oxford University Press,1968.

ULLMANN, S. *Semantics*, Oxford: Blackwell, 1962.

VAN BRUGGEN, J. *The Future of the Bible*, Nashville: Thomas Nelson, 1978.

VENUTI, L., ed. *Rethinking Translation: Discourse, Subjectivity, Ideology*, London and New York: Routledge, 1992.

VINAY, J.P. and DARBELNET, J. *Stylistique Comparée du Francais et de l'Anglais*, Paris: Didier, 1958.

VLASTO, A.P. *A Linguistic History of Russia to the End of the Eighteenth Century*, Oxford: The Clarendon Press, 1986.

VON RAD, G. *The Problem of the Hexateuch and Other Essays*, London: SCM, 1984.

WADSWORTH, M., ed. *Ways of Reading the Bible*, London: Harvester Press, 1981.

WALLS, A.F. 'The Translation Principle in Christian History' in STINE, P.C., ed., 1990, 24-39.

WARNER, M., ed., *The Bible as Rhetoric: Studies in Biblical Persuasion and Credibility*, London & New York: Routledge, 1990.

WEEKS, N. K. 'Some Points for Defenders of Translation' in SKILTON, J.H. and LADLEY, C.A., 1978, 120-6.

WEEKS, N.K. *The Sufficiency of Scripture*, Edinburgh: The Banner of Truth Trust, 1988.

WEIGLE, L.A. *An Introduction to the Revised Standard Version of the New Testament.* New York: International Council of Religious Education, 1949.

WENDLAND, E. R. 'Receptor Language Style and Bible Translation, I: A search for language which "grabs the heart"', *TBT* 32:1 (1981), 107-24.

WENDLAND, E. R. 'Receptor Language Style and Bible Translation, II: The problem of control in restructuring', *TBT* 32:3 (1981), 319-28.

WENDLAND, E. R. *The Cultural Factor in Bible Translation,* Hong Kong: United Bible Societies Monograph Series No. 2, 1987.

WENHAM, G.J. *Genesis 1-15* , (WBC), Waco, TX: Word Books, 1987.

WESTCOTT, B.F. *A General View of the History of the English Bible,* New York: Macmillan, 3rd ed., rev. by W.A. Wright, 1927.

WEVERS, J.A. *LXX: Notes on the Greek Text of Genesis*, Septuagint and Cognate Studies 35, Atlanta, GA: Scholars Press, 1993.

WHORF, B.L. *Language Thought and Reality: Selected Papers*, ed. J.B. Carroll, Wiley: New York, 1956.

WIDDOWSON, H. *Explorations in Applied Linguistics*, Oxford: Oxford University Press, 1979.

WIFSTRAND, A. 'A Problem Concerning the Word Order in the NT', *Studia Theologica* 3 (1949), 172-84.

WILLIAMSON, L. 'Translations and Interpretation: New Testament', *Interpretation* 32 (1978), 158-70.

WILSS, W. *The Science of Translation*, Tübingen: Gunter Nav Verlag, 1982.

WITTE, P.W. 'Three Thousand Languages without the Bible: A Catholic Response', *Bible Today* 22:5 (1984), 306-10.

WITTGENSTEIN, L. *Philosophical Investigations*, Oxford: Blackwell, 1953.

WONDERLY, W.L. 'Some Principles of 'Common-Language' Translation', *TBT* 21 (1970), 126-37.

WONDERLY, W. L. 'The Bible in the Church', *TBT* 37:2 (1986), 212-6.

WONDERLY, W. L. *Bible Translation for Popular Use, Helps for Translators*, Vol. VII, London: United Bible Societies, 1968.

WORTH, R.H. *Bible Translations: A History Through Source Documents*, Jefferson, NC and London: McFarland & Co., 1992.

YALLOP, C 'Communication Through Language', unpublished paper delivered at Focus Conference, 1980.

YALLOP, C. 'The Lord is my Goatherd; I Don't Want Him', *Interchange* 16 (1974), 214-20.

YOUNG, N. 'C.H. Dodd, 'Hilaskesthai' and His Critics', *EQ* 48:2 (1976), 67-78.

ZLATEVA, P. ed. and trans., *Translation as Social Action: Russian and Bulgarian Perspectives*, London and New York: Routledge, 1993.