UNIVERSITY OF LEEDS

Acceptance of Shared Automated Vehicles

by

Patrick Dichabeng

Submitted in accordance with the requirements for the degree of
Doctor of Philosophy

The University of Leeds
Institute for Transport Studies

September 2025

Acknowledgements

I would like to express my deepest gratitude and appreciation to my supervisors, Prof. Natasha Merat and Prof. Gustav Markkula, for their unwavering support, guidance, and encouragement throughout my research journey. Their expertise, insightful feedback, and constant motivation have been invaluable to the completion of this thesis. I was truly lucky to have them in my corner.

I extend a special thank you to Dr. Zia Wadud, the former Director of Postgraduate Research, and to Rachel Furniss, the Doctoral College Officer - Student Support, for their outstanding assistance and dedication to looking after my well-being throughout this difficult doctoral journey.

This thesis would not have been possible without the support, guidance, and encouragement of all those mentioned above. I am truly indebted to each of them for their invaluable contributions to my academic journey.

Dedication

This thesis is dedicated to my father, David S. Dichabeng, who passed away on 1 March 2019, early in the second year of my PhD. He was my compass and best friend. His loss left me aimless, lonely and empty inside.

Publications

The following publications were prepared during the course of this research:

Journal Papers

Dichabeng, P., Merat, N., & Markkula, G. (2021). Factors that influence the acceptance of future shared automated vehicles – A focus group study with United Kingdom drivers. *Transportation Research Part F: Traffic Psychology and Behaviour, 82*, 121-140. doi: https://doi.org/10.1016/j.trf.2021.08.009

Dichabeng, P., Merat, N., & Markkula, G. (2025). Service Quality and Trust in Shared Automated Vehicle Acceptance: An Extended UTAUT2 Analysis. *Transportation Research Part F: Traffic Psychology and Behaviour. Under Review.*

Book Chapters

Dichabeng, P., Merat, N., & Markkula, G. (2024). Shifting gears toward net zero: Exploring user acceptance of shared automated vehicles. In K. Sung, P. Isherwood, & R. Moalosi (Eds.), Research Journeys to Net Zero - Current and Future Leaders (1st ed.). London: Routledge. doi: https://doi.org/10.4324/9781003380566

Contents

Acknowledgements ii

Dedication iii

Publications iv

Contents v

List of Tables xiii

List of Figures xv

List of Abbreviations xvii

Chapter 1 Introduction 2

1.1. Research Problem and Gap 5

1.2. Theoretical Framework 7

1.2.1. Unified Theory of Acceptance and Use of Technology (UTAUT) 7

1.2.2. UTAUT2 8

1.2.3. Adapting UTAUT2 for High-Speed SAVs 8

1.2.4. Utilising Theories and Models for Investigating User Acceptance of High-Speed Shared Automated Vehicles (SAVs) 9

1.3. Methodological Approach 10

1.3.1. Plan A: Original Research Plan for Study 2 Before Covid-19 12

1.3.2. Plan B: Revised Methodology for Study 2 13

1.3.3. Research Methods: Focus Groups and Online Surveys 15

1.4. Scope of the Research 15

1.5. Research Objectives and Questions 16

1.6. Thesis Outline 17

Chapter 2 Literature Review 20

2.1. Automated Vehicles 21

2.2. Shared Mobility 24

2.2.1. The benefits of Shared Mobility 26

2.2.1.1. Reduces traffic congestion: 26
2.2.1.2. Promotes sustainability 27
2.2.1.3. Increases access to transportation 28
2.2.1.4. Cost saving benefits 29
2.2.1.5. Enhanced mobility 30
2.2.1.6. Support for local economies 31
2.2.2. Challenges facing shared mobility 33
2.2.2.1. Regulation 33
2.2.2.2. Competition 34
2.3. Shared Automated Vehicles 36
2.3.1. Types of Shared Automated Vehicles 37
2.3.2. Benefits of Shared Automated Vehicles 38
2.3.3. Challenges facing Shared Automated Vehicles 41
2.3.4. The impact of Shared Automated Vehicles on traffic congestion and parking space 43
2.3.5. The impact of Shared Automated Vehicles on the cost of transportation 45
2.3.6. Passenger willingness to share trips with strangers in Shared Automated Vehicles 46
2.3.7. Passenger attitudes towards SAVs 48
2.4. Private Vehicle Ownership 49
2.4.1. Private Vehicle Ownership in the UK 50
2.4.2. Typical trip types for private vehicles in the UK 53
2.4.3. The impact of SAVs on private vehicle ownership 55
2.5. Acceptance 56
2.5.1. Measuring Acceptance 57
2.5.1.1. Technology Acceptance Model (TAM) 57
2.5.1.2. Unified Theory of Acceptance and Use of Technology (UTAUT) 57

2.5.1.3. Instrumental vs. Affective Dimensions in Technology Acceptance 59
2.5.2. Use Behaviour vs Intention to Use 61
2.5.3. Existing Acceptance Models for SAVs 62
2.5.4. Acceptance of Shared Vehicles 64
2.5.5. Acceptance of Shared Automated Vehicles 65
2.5.6. Limitations of Technology Acceptance Research in Vehicle Automation 66
2.6. Virtual Reality as a Research Methodology for SAV Acceptance 67
2.6.1. Prior Applications of VR in Automated Vehicle Research 67
2.6.1.1. Using VR to study human-vehicle interactions 67
2.6.1.2. Training and Education 68
2.6.2. Key Concepts in Virtual Reality Environments 69
2.6.2.1. Visual and Psychological Fidelity in Virtual Reality 69
2.6.2.2. Visual Fidelity 70
2.6.2.3. Psychological Fidelity 71
2.6.2.4. Immersion and its Impact on Virtual Reality Experiences 72
2.6.2.5. Factors Affecting Immersion 72
2.6.2.6. The Role of Immersion in Virtual Reality Research and Applications 74
2.6.3. The Significance of Presence in Virtual Reality Experiences 75
2.6.3.1. Components of Presence 75
2.6.3.2. The Influence of Immersion and Visual Fidelity on Presence 76
2.6.3.3. Implications for VR Applications 77
2.6.3.4. Implications of Presence for Different User Populations 78
2.6.4. Measuring Presence: The Igroup Presence Questionnaire (IPQ) 79
2.6.4.1. The use of IPQ Presence Questionnaire to measure presence in virtual reality research 80
2.6.4.2. Examples of the IPQ Presence Questionnaire being used to measure presence when using passive monoscopic VR environments 81

2.7. Conclusion 82

Chapter 3 Study 1: Factors that influence the acceptance of future shared automated vehicles – a focus group study with United Kingdom drivers 85

3.1. Introduction 85

3.2. Study Aims 86

3.3. Methods 87

3.3.1. Participant recruitment 88

3.3.2. Instrument and sample questions 90

3.3.3. Procedure 91

3.3.4. Analysis of responses 92

3.4. Results 94

3.4.1. Participants 94

3.4.2. Main categories and subcategories 97

3.4.3. Main category 1: Service Quality 99

3.4.3.1. Availability 99

3.4.3.2. Comfort 100

3.4.3.3. Convenience 101

3.4.3.4. Flexibility 101

3.4.3.5. Reliability 102

3.4.3.6. Shared Space Quality 103

3.4.4. Main category 2: Trust 104

3.4.4.1. Trusting automated vehicles 104

3.4.4.2. Preference for supervision 105

3.4.4.3. Trialability 105

3.4.4.4. Perceived risks 106

3.4.4.5. Security 107

3.4.4.6. Trusting co-passengers 108

3.4.5. Main category 3: Price Value 110
3.4.5.1. Cost 110
3.4.5.2. Perceived benefits 111
3.5. Discussion 111
3.5.1. Service Quality 112
3.5.2. Trust 114
3.5.3. Price Value 116
3.5.4. Conceptual technology acceptance model for shared automated vehicles 117
3.6. Limitations of this study 118
3.7. Conclusions 119
Chapter 4 Study 2: The Role of Service Quality and Trust in Shaping British Drivers' Intentions to Use Shared Automated Vehicles - A PLS-SEM Analysis of an Extended UTAUT2 Model 122
4.1. Introduction 122
4.2. Study Aims 123
4.3. Definitions and Taxonomy 123
4.4. Conceptual Mapping 125
4.5. Method 127
4.5.1. Target Participants and recruitment 128
4.5.2. Treatment Scenarios 129
4.5.2.1. Segmented ride-sharing 130
4.5.2.2. Scenario 1: Private Ride-Sharing (PRS) 131
4.5.2.3. Scenario 2: Communal Ride-Sharing (CRS) 132
4.5.2.4. Scenario 3: Flexible Ride-Sharing (FRS) 132
4.5.3. Procedure 133
4.5.4. Instrument 136
4.5.4.1. Research Model, Study Variables and Questionnaire Items 136

4.5.4.2. Hypotheses 141
4.5.4.3. Pre-test 142
4.5.5. Data Analysis 143
4.6. Results 144
4.6.1. Initial measurement model 145
4.6.1.1. Internal consistency reliability 145
4.6.1.2. Indicator reliability 145
4.6.1.3. Convergent validity 146
4.6.1.4. Discriminant validity 146
4.6.1.5. Resolving measurement model issues 147
4.6.1.6. Goodness of model fit 149
4.6.2. Initial structural model 149
4.6.2.1. Initial hypotheses testing 150
4.6.2.2. Revising the structural model 151
4.6.2.3. Revised structural model hypotheses testing 152
4.6.3. Scenario Differences 154
4.6.4. Final measurement model 158
4.6.4.1. Internal consistency reliability 158
4.6.4.2. Indicator reliability 158
4.6.4.3. Convergent validity 159
4.6.4.4. Discriminant validity 159
4.6.4.5. Goodness of model fit 162
4.6.5. Final structural model 162
4.6.5.1. Final Hypothesis testing 163
4.7. Discussion 164
4.8. Conclusions 166

Chapter 5 Study 3: Presence in using passive monoscopic virtual reality environments to study segmented shared spaces in highly automated vehicles 169

5.1. Introduction 169

5.1.1. Research Aim 170

5.2. Method 171

5.2.1. Participants 172

5.2.2. Research Design 173

5.2.3. Video Scenarios 174

5.2.4. Questionnaire: 175

5.2.5. Procedure 176

5.2.6. Measures 177

5.2.7. Data Analysis 177

5.3. Results 178

5.3.1. General Effect of Screen Size 178

5.3.2. Device-Specific Effects on Presence Dimensions 181

5.4. Discussion 184

5.5. Implications 188

5.6. Conclusions 189

5.6.1. Limitations 191

5.6.2. Strengths 192

Chapter 6 Conclusions 196

6.1. Addressing Research Objectives 196

6.2. Contribution to Knowledge and Practice 200

6.3. Limitations of the research 201

6.4. Future research 202

6.5. Concluding Statement 204

List of References 205

Appendices **224**

Appendix A – Study 1 Daily Activity Guide 224

Appendix B – Study 1 Sample Questions 225

List of Tables

Table 1: Summary of key benefits offered by shared mobility 32

Table 2: Summary of shared mobility challenges 35

Table 3: Key benefits of Shared Automated Vehicles 40

Table 4: Summary of challenges facing SAVs 43

Table 5: Top three barriers and benefits of car-sharing and ride-sharing (Yakovlev and Otto, 2018) 65

Table 6: Codebook with factors from Nordhoff et al. (2019) and UTAUT2 (Venkatesh et al., 2012) 93

Table 7: Participant information 95

Table 8: Coded references per main category in descending order 97

Table 9: Number of participants and number of coded references in each category 98

Table 10: Coded Sentiment for Shared Space in SAVs, number of participants. 110

Table 11: Key defining attributes and features of each scenario 126

Table 12: Measurement of study variables 138

Table 13: Study variables 140

Table 14: Pre-test questionnaire items 143

Table 15: Round 1 participant information 144

Table 16: Fornell and Larcker's criterion from SmartPLS 146

Table 17: Heterotrait-Monotrait Ratio (HTMT) results 147

Table 18: Initial measurement model results, after resolving measurement model issues 148

Table 19: Model fit results 149

Table 20: Initial hypotheses testing results 150

Table 21: Revised structural model hypotheses testing results 153

Table 22: Repeated Measures ANOVA - Pairwise Comparisons 156

Table 23: Fornell and Larcker's criterion from SmartPLS – second dataset 159

Table 24: Heterotrait-Monotrait Ratio (HTMT) results – second dataset 160

Table 25: Heterotrait-Monotrait Ratio (HTMT) results using latent variable scores – second dataset 160

Table 26: Final measurement model results 161

Table 27: Final structural model hypotheses testing results 163

Table 28: Participant information 172

Table 29: IPQ Questionnaire Items 176

Table 30: Descriptive Statistics and Independent Samples t-test Results Comparing IPQ Presence Dimensions Between Large Screen and Small Screen 181

Table 31: Analysis of Variance for Dependent Variables by Device Type 181

Table 32: ANOVA and Post Hoc Comparisons of Dependent Variables by Device Type 183

Table 33: Study 1 Sample questions 225

List of Figures

Figure 1: SAE J3016 Level of Driving Automation (SAE, 2021a) 23

Figure 2: Private Vehicle Dominance in the UK 54

Figure 3: Extended Unified Theory of Acceptance and Use of Technology (Venkatesh et al., 2012) 59

Figure 4: The evolution of the acceptance models from TAM to CTAM 64

Figure 5: Venn diagram model for quality of VR experience (Jung and Lindeman, 2021) 77

Figure 6: Flowchart on research method 90

Figure 7: Geographical spread of recruited participants 97

Figure 8: Main categories and subcategories by the number of coded references. 99

Figure 9: A conceptual acceptance model for SAVs developed by combining UTAUT2 with findings from this study as extended model predictors 117

Figure 10: Taxonomy on shared mobility (Jin et al., 2018) 124

Figure 11: Expected ubiquity of ridesourcing for SAVs 125

Figure 12: Four-quadrant conceptual mapping model of use cases for future SAVs 126

Figure 13: SAV commuting configurations derived from the four-quadrant conceptual model 127

Figure 14: Modified Dosch Design Concept Autonomous Car 130

Figure 15: Participant view within Private Ride-sharing (PRS), with virtual passengers 132

Figure 16: Participant view within Communal Ride-sharing, with virtual passengers. 132

Figure 17: Participant view within Flexible Ride-sharing, with virtual passengers..... 133

Figure 18: Example trip for each use case 133

Figure 19: Snapshots from the scenario trip (FRS) 134

Figure 20: Scenarios travel route - trip 134

Figure 21: Counterbalanced repeated measures 135

Figure 22: Research Model (Dichabeng et al., 2021) used as the PLS-SEM model for results analysis, in SmartPLS 140

Figure 23: Revised structural model 152

Figure 24: Final structural model 154

Figure 25: Estimated Marginal Means 158

Figure 26: Using the construct scores as indicators - the embedded two-stage approach 161

Figure 27: Result from final Structural Model 164

Figure 28: IPQ Questionnaire Results 179

List of Abbreviations

ARTS	Automated Road Transport Systems
AVs	Automated Vehicles
BI	Behavioural Intention
CRS	Communal Ride-Sharing
CTAM	Car Technology Acceptance Model
EE	Effort Expectancy
EVs	Electric Vehicles
FC	Facilitating Conditions
FRS	Flexible Ride Sharing
HM	Hedonic Motivation
HMIs	Human-Machine Interface
IDT	Innovation Diffusion Theory
IT	Information Technology
ITF	International Transport Forum
MaaS	Mobility As A Service
MPCU	Model Of PC Utilization
PE	Performance Expectancy
PRS	Private Ride-Sharing
PT	Public Transit

PV	Price Value
SAE	Society Of Automotive Engineers
SAVs	Shared Automated Vehicles
SCT	Social Cognitive Theory
SI	Social Influence
SMMT	Society Of Motor Manufacturers And Traders
TAM	Technology Acceptance Model
TPB	Theory Of Planned Behaviour
TRA	The Theory Of Reasoned Action
UTAUT	Unified Theory Of Acceptance And Use Of Technology
UTAUT2	Unified Theory Of Acceptance And Use Of Technology 2
V2I	Vehicle-To-Infrastructure
V2V	Vehicle-To-Vehicle
VMT	Vehicle Miles Travelled

Chapter 1

Introduction

Chapter 1 Introduction

Currently, car-sharing schemes such as Uber and Lyft provide Mobility as a Service (MaaS), defining their main value proposition (mobility) as a result, instead of buying a car (Hildebrandt et al., 2015). These are car-sharing schemes in which ownership of the product remains with the manufacturer/service provider, and the user pays for using the services, in this case, mobility. Since users pay only for the actual use of cars under MaaS (mileage or time), shared and automated vehicles are expected to be more economical than privately owned cars (Fagnant, D. and Kockelman, 2014), with acquisition and maintenance costs shifting from the users to the service providers.

Many studies have been conducted on the acceptance of Society of Automotive Engineers (SAE) Level 4 Shared Automated Vehicles (SAVs). In these previous studies (Madigan et al., 2016; Nordhoff et al., 2017; Salonen, 2018), the automated vehicles were confined to a fixed route, have typically been driverless low-speed pods/shuttles, with a supervisor/operator present, with seats for 8 to 12 passengers in what is essentially a small shuttle bus. Salonen (2018) found that the presence of a supervisor/operator is key to the perception of security and for emergency management on-board; features that will not be available in future high-speed SAVs. Salonen (2018) also found that passenger perception of personal in-vehicle security was worse than that of a regular bus (maximum 50km/h in Finland), even though vehicle safety was rated higher. This result is important because it shows the psychological impact of the absence of a human driver on passengers. To mitigate this, the implementation of emergency buttons has been suggested to provide users with a sense of control (Hohenberger et al., 2016), thereby reducing anxiety.

Reducing traffic congestion through the adoption of SAVs is a challenge, as some users are more readily open to accepting future high-speed SAVs, whereas others are not. Previous research has found that younger, more educated and more tech-savvy commuters are more likely to be the early adopters of SAVs (Krueger, Rico et al., 2016; Haboucha et al., 2017; Lavieri, Patrícia S. et al., 2017). However, individuals who have a low opinion of current Public Transit (PT) offerings and do not use PT are less likely to choose SAVs (Haboucha et al., 2017). The findings by Zmud and Sener (2017) suggest that likely users focus on personal benefits rather than societal benefits, such that the predicted societal benefits of SAVs, such as reduced traffic congestion and reduced pollution, are not likely to influence user preference unless they are perceived as individual benefits. While traffic congestion can be reduced in numerous ways, drawing travellers away from private cars to public transit can be effective (Abdulkareem et al., 2020), together with the implementation of ride-sharing strategies (Jrew et al., 2019). However, Nordhoff et al. (2017) found that car use is negatively correlated with a positive attitude towards automated vehicles; that is, the more people make use of privately owned cars, the less likely they are to have positive attitudes towards Automated vehicles (AVs), let alone toward SAVs. This lack of acceptance needs to be understood by examining users' intentions to use SAVs. Researchers often use acceptance models to investigate users' intentions to use a product or service.

One of the most widely applied models is the Technology Acceptance Model, which posits that users' perceived usefulness and perceived ease of use are key determinants of their attitude toward using a technology and ultimately, their intention to use it (Dirsehan and Can, 2020). Recently, the Unified Theory of Acceptance and Use of Technology (UTAUT) has been used by some researchers (Madigan et al., 2016; Nordhoff et al., 2017;

Zmud and Sener, 2017) to assess drivers' and passengers' acceptance of vehicle automation, and shared vehicle automation. Even more recently, UTAUT2 has been used by Nordhoff et al. (2020a) to assess the acceptance of Level 3 automated vehicles. Since UTAUT was developed to understand user acceptance of information technology, other researchers, such as Geldmacher et al. (2017) have created a modified version of UTAUT. Similarly, Osswald et al. (2012) created a modified version of the Technology Acceptance Model (TAM) called the Car Technology Acceptance Model (CTAM) as they reasoned important factors such as perceived safety were not in TAM. While these modified versions of TAM and UTAUT brought the acceptance models closer to the transportation research context, they excluded constructs that were later added in the domain-general UTAUT2 by Venkatesh et al. (2012) such as habit, price value and hedonic motivation. In a study comparing seven acceptance of technology models, Rondan-Cataluña et al. (2015) found that, for mobile internet users, UTAUT2 obtains a better explanatory power than the other models; 4.5% better than UTAUT.

To investigate and describe user acceptance of future high-speed SAVs, it would be helpful to create a modified version of UTAUT2 that integrates factors and constructs that are relevant to future high-speed SAVs and relevant to the specific users expected to adopt high-speed SAVs, that is, owners and drivers of private cars. There is a lack of research specifically focusing on the acceptance of high-speed SAVs, and there is a need for a modified UTAUT2 model to better understand user acceptance in this context.

1.1. Research Problem and Gap

SAVs promise a significant transformation to the transportation landscape, offering Mobility as a Service (MaaS) alongside potential benefits such as reducing traffic congestion, vehicle ownership, and emissions. However, achieving widespread acceptance and adoption of high-speed SAVs remains a complex issue, given that public willingness to embrace this technology varies considerably across different segments of the population. Indeed, much of the prior research has tended to focus on SAVs operating at low speeds or with a supervisor/operator on board, typically within contained trial or pilot schemes. Consequently, a notable gap persists in our understanding of user acceptance for fully autonomous, high-speed SAVs intended for operation without human intervention in more diverse and demanding real-world conditions (Madigan et al., 2016; Nordhoff et al., 2017; Salonen, 2018). This research gap thus raises critical questions about the factors that might truly influence the acceptance and adoption of these more advanced, future high-speed SAVs, and it is these very questions that form the central focus of this thesis.

The present study aims to bridge this research gap. It begins by qualitatively exploring the factors at play, the insights from which then inform the development of a modified version of the Unified Theory of Acceptance and Use of Technology 2 (UTAUT2). This extended model, as will be detailed in later parts of this thesis (particularly in Chapter 4), seeks to incorporate relevant factors and constructs specific to high-speed SAVs and the unique perspectives of key potential user groups. Of particular interest are owners and drivers of private cars – a demographic whose engagement is undeniably crucial if the anticipated societal benefits of SAVs, notably mode shift, are to be realised. By doing so, the study aims to provide a more nuanced and contextually-grounded

understanding of SAV acceptance and the factors likely to influence intentions to adopt this emerging transportation technology.

Understanding user acceptance of high-speed SAVs is crucial for several interconnected reasons. Firstly, and perhaps most obviously, successful implementation and adoption of SAVs holds the promise of delivering significant societal, environmental, and economic benefits, including reduced traffic congestion, lower emissions, and decreased transportation costs (Fagnant and Kockelman, 2014; Krueger, Rico et al., 2016; Jrew et al., 2019). Secondly, a clear understanding of user acceptance equips policymakers, planners, and industry stakeholders to devise targeted strategies that address potential user concerns and barriers, thereby helping to pave the way for a smoother transition to SAV-based transportation systems (Lavieri, Patrícia S. et al., 2017; Haboucha et al., 2017).

Investigating the acceptance of a technology that is not yet publicly available presents a clear methodological challenge. Virtual Reality (VR) is an established tool for simulating such future scenarios, but the onset of the COVID-19 pandemic made traditional lab-based studies infeasible. This research therefore pivoted to a remote methodology, using passive monoscopic VR simulations that participants could view on their own devices. This necessary adaptation raises a critical question about the method's validity: can a consistent and meaningful user experience be achieved across a diverse range of personal devices, from smartphones to desktops? As the psychological 'presence' a user feels is key to the validity of VR research, evaluating the suitability of this remote VR approach became a secondary, but essential, objective of this thesis.

Finally, insights into user acceptance can directly inform the design and development of high-speed SAVs and their associated services. This helps ensure that

they meet the needs and preferences of potential users, ultimately resulting in greater adoption rates and more significant benefits (Nordhoff et al., 2020a; Hohenberger et al., 2016). This thesis, through the multi-study approach detailed in Chapters 3, 4, and 5, therefore seeks to contribute to this understanding by specifically investigating these critical acceptance dynamics.

1.2. Theoretical Framework

The present investigation into the user acceptance of high-speed SAVs is predicated upon established theoretical frameworks developed to elucidate technology adoption and utilisation. Two pertinent models, the UTAUT and its subsequent extension, UTAUT2, form the foundational basis for this research.

1.2.1. Unified Theory of Acceptance and Use of Technology (UTAUT)

UTAUT, developed by Venkatesh et al. (2003), serves as a prominent model designed to explicate and predict user acceptance and utilisation of novel technologies. The model itself constitutes a synthesis, integrating constructs from eight established technology acceptance theories, including the Technology Acceptance Model (TAM) (Davis, 1989) and the Theory of Planned Behaviour (TPB) (Ajzen, 1991). Fundamentally, UTAUT posits that four principal constructs determine user intention and subsequent usage behaviour: (1) Performance Expectancy, (2) Effort Expectancy, (3) Social Influence, and (4) Facilitating Conditions. Furthermore, the model incorporates four moderating variables: gender, age, experience, and voluntariness of use, which are hypothesised to influence the relationships between the core constructs and behavioural intention (BI) or use.

1.2.2. UTAUT2

Subsequently, Venkatesh et al. (2012) introduced UTAUT2, an extension of the original UTAUT framework specifically adapted for application within consumer contexts. While retaining the original constructs, UTAUT2 incorporates three additional determinants: Hedonic Motivation, Price Value, and Habit. The inclusion of these constructs renders UTAUT2 particularly apposite for investigating technology acceptance in consumer settings, as it explicitly considers factors such as perceived enjoyment, the cognitive trade-off between perceived benefits and monetary cost, and learned automatic responses influencing individual adoption decisions.

1.2.3. Adapting UTAUT2 for High-Speed SAVs

For the investigation of user acceptance pertinent to high-speed SAVs, UTAUT2 provides a robust foundational framework, primarily due to its emphasis on consumer adoption of emergent technologies. Nevertheless, it is acknowledged that SAVs introduce unique considerations distinct from previously studied consumer technologies. Consequently, the adaptation of the model through the integration of factors and constructs specifically relevant to high-speed SAVs and their prospective user groups, particularly private car owners and drivers, is deemed essential. Such modifications are anticipated to encompass factors including, but not limited to, perceived safety, trust in automated systems, and environmental concerns.

By utilising the UTAUT2 model as a foundational structure and systematically incorporating these additional, contextually relevant factors, the present research endeavours to formulate a comprehensive model capable of capturing the nuanced determinants of user acceptance in the specific domain of high-speed SAVs. This tailored theoretical framework is designed to guide the empirical exploration undertaken in this

study and to furnish valuable insights for policymakers, industry stakeholders, and researchers engaged in promoting SAV adoption and maximising their potential societal, environmental, and economic benefits.

1.2.4. Utilising Theories and Models for Investigating User Acceptance of High-Speed Shared Automated Vehicles (SAVs)

The decision to employ established theories and models, such as the UTAUT and its modified version, UTAUT2, brings several advantages to an investigation into user acceptance of high-speed SAVs.

First and foremost, both UTAUT and UTAUT2 provide a robust conceptual lens for understanding the factors influencing user acceptance of new technologies. These factors – performance expectancy, effort expectancy, social influence, facilitating conditions, hedonic motivation, price value, and habit – offer a structured way to approach the problem. Grounding the investigation in these models helps to structure the inquiry, ensuring that key factors affecting high-speed SAV adoption are systematically considered.

Furthermore, the flexibility of these models is a key strength. Specifically, modifying the UTAUT2 model to incorporate additional factors relevant to high-speed SAVs (e.g., perceived safety, trust in technology, environmental concerns, as explored in this thesis) allows for the development of a tailored model capturing unique aspects of user acceptance in this specific context. This adapted model, it is hoped, will facilitate a clearer understanding and prediction of adoption behaviour among potential users, such as private car owners and drivers.

Beyond conceptual guidance, UTAUT and UTAUT2 models also play a practical role in shaping the research methodology itself. They assist in identifying crucial variables and the relationships between them, which in turn informs the design of research instruments, such as survey item selection or experimental conditions. The aim here is to ensure that the investigation captures essential aspects of user acceptance and allows for the drawing of meaningful conclusions about high-speed SAV adoption.

Using established theories and models as the basis for investigation also strengthens the research by enabling direct comparison with the extensive body of existing literature on technology acceptance and adoption. This allows for contextualising results, assessing generalisability, and identifying any unique aspects of user acceptance in the high-speed SAV context.

Ultimately, understanding the factors influencing user acceptance of high-speed SAVs, as guided by the UTAUT and UTAUT2 models, helps identify potential strategies for promoting adoption. For example, research findings could inform marketing campaign design, user-friendly interface development, or policy intervention and incentive implementation.

1.3. Methodological Approach

This study investigated the acceptance of SAVs using a comprehensive and multifaceted methodological approach. The approach was designed to capture the complex interplay of factors that influence user perceptions and attitudes. The research methodology integrated qualitative and quantitative methods to provide a thorough understanding of the key drivers and barriers to the adoption of SAVs. An extended overview of the methodological approach is provided here, in Chapter 1, followed by

detailed explanations and justifications at the start of each study chapter (Chapters 3, 4, and 5).

The first step involved a systematic review of existing literature on technology acceptance models, specifically their application to the context of automated vehicles (Rahman et al., 2017). This review established the theoretical foundation, identifying salient factors that may influence user acceptance of high-speed SAVS, such as performance expectancy, effort expectancy, social influence, etc. Building on this theoretical groundwork, a mixed-methods approach was employed, beginning with focus groups to explore the lived experiences, concerns, and perceptions of potential users of SAVs (Then et al., 2014). The nuanced understanding gained from the systematic review of existing literature informed the development of qualitative research instruments, such as focus group questions and guides.

The research design aligned with the study's research question, objectives, and the nature of the data required for a comprehensive understanding of user acceptance of high-speed SAVs. A mixed-methods design was selected, as it enabled the collection of both quantitative and qualitative data, ensuring a holistic understanding of the factors that influence the acceptance of high-speed SAVs. Quantitative data provided breadth, while qualitative data offered depth, enhancing the validity and reliability of the findings through triangulation.

A qualitative method, focus groups, was used to gather in-depth insights into participants' thoughts, opinions, and experiences related to high-speed SAVs (Creswell, 2014; Then et al., 2014). Semi-structured interviews were conducted to uncover underlying reasons, motivations, and concerns that might not have been captured by quantitative methods. An interview guide containing open-ended questions based on the

research objectives was developed, allowing flexibility to explore emerging topics during the interviews. Qualitative data were analysed using thematic analysis to identify common themes and patterns. This iterative process of data collection and analysis allowed the research questions and hypotheses to be refined. Moreover, the insights gained from qualitative data provided context and depth to the quantitative findings.

The focus group discussions offered a platform for participants to share their views and experiences, facilitating a dynamic exchange of ideas and perspectives. This method revealed group dynamics, social norms, and collective opinions that might influence user acceptance of high-speed SAVs. The focus group data were also analysed using thematic or content analysis to identify common themes and patterns. The interactive nature of focus groups fostered a rich dialogue, uncovering complex social and psychological factors. These discussions also highlighted areas of consensus and disagreement, which were valuable for understanding the diversity of user perspectives in Study 1 (See Chapter 3).

1.3.1. Plan A: Original Research Plan for Study 2 Before Covid-19

The initial research plan for Study 2 (See Chapter 4) sought to examine public acceptance of high-speed SAVs through the use of an immersive VR experience for data collection. Drawing upon insights from (Farooq et al., 2018), who demonstrated that participants interacting in a virtual environment exhibited a greater preference for automated vehicles compared to those responding to hypothetical scenarios, this study intended to employ a VR Head Mounted Display (HMD) to deliver a highly immersive and direct experience. By allowing participants to engage with the scenario as realistically as possible, the approach aimed to minimise hypothetical bias. Unlike traditional survey methodologies, VR technology offers enhanced visualisation capabilities, detailed

experiential settings, and a more accurate depiction of choice scenarios. Through the VR experiment, participants would experience both the interior of an automated vehicle and its external environment, facilitating a realistic and engaging response.

An integral component of the initial plan included monitoring participants for Virtual Reality-Induced Side Effects (VRISE) using the Misery Scale developed by (Emmerik et al., 2011). This precaution was critical due to the known side effects associated with the use of HMDs, such as cyber-sickness. Ensuring the safety and comfort of participants was a key consideration in the design of this experiment.

The outbreak of the Covid-19 pandemic imposed severe limitations on face-to-face interactions and the use of shared VR equipment, rendering the original plan (Plan A) infeasible. Physical distancing requirements and safety concerns necessitated a significant shift in the research methodology, resulting in the development of an alternative approach, referred to as Plan B.

1.3.2. Plan B: Revised Methodology for Study 2

Under Plan B, the methodology was adapted to comply with pandemic-related restrictions. The immersive VR experience using HMDs was replaced by monoscopic VR videos presented on flat screens, coupled with an online survey to capture participant responses. Participants viewed these videos on standard computer or mobile screens; bypassing the need for shared VR equipment. To create these monoscopic VR videos, there was a need to acquire skills in animation development and camera movement simulation to replicate participants' head movements, thus providing a dynamic visual experience.

While this revised approach enabled the continuation of data collection under restrictive conditions, it introduced certain limitations. The immersive quality of the original VR experience was significantly diminished, likely reducing the realism and sense of presence experienced by participants. Presence, defined as the subjective feeling of "being there," is a critical factor in VR studies, as it influences the authenticity of participants' responses to stimuli. The absence of full immersion may have weakened the study's ability to replicate real-world reactions. These concerns became a research objective in the thesis (Objective 3) and further led to development of Chapter 5.

Survey research was employed to collect quantitative data on participants' attitudes, preferences, and perceptions of high-speed SAVs. A questionnaire was designed based on the constructs from the modified UTAUT2 model and additional factors specific to SAVs. This method allowed for the collection of data from a larger sample than would have been possible with Plan A, which was then analysed using descriptive and inferential statistics (Structural Equation Modelling) to identify patterns and relationships between variables. The robust nature of quantitative data analysis enabled the derivation of generalisable conclusions, while also identifying key variables for further exploration through qualitative methods.

Designing a comprehensive and well-structured questionnaire was crucial for obtaining reliable and valid data. Care was taken to ensure the survey items accurately measured the constructs of interest and were worded clearly to avoid ambiguity or misinterpretation. A mix of closed and open-ended questions was used to capture both numerical data and detailed personal insights.

A mixed-methods research design, incorporating both qualitative focus groups and quantitative survey research, was chosen for this study. This approach was selected

to enable a comprehensive investigation into user acceptance of high-speed SAVs. The initial qualitative phase is intended to explore user perceptions in-depth, while the subsequent quantitative phase is designed to test the emerging hypotheses on a larger scale, allowing for triangulation of the findings.

1.3.3. Research Methods: Focus Groups and Online Surveys

To investigate user acceptance of high-speed SAVs, this research employed a mixed-methods approach using online asynchronous focus groups and online surveys. The focus groups were designed to qualitatively explore the underlying factors, concerns, and preferences of UK drivers in depth. The findings from this exploratory phase were then used to develop and test a quantitative model via online surveys administered to a larger sample. This sequential design was chosen to first identify novel constructs relevant to SAV acceptance and then to statistically validate their influence. This two-phase approach ensures that the quantitative model being tested is grounded in the lived experiences and genuine concerns of its target users, thereby strengthening its relevance and validity.

1.4. Scope of the Research

The scope of the study on user acceptance of high-speed SAVs was defined by several factors, including the specific population, geographic region, and timeframe. This section outlines the scope of the study and provides a rationale for the choices made.

The study primarily targeted private car owners as the population of interest. Focusing on this group enables the exploration of factors that influence their acceptance of high-speed SAVs and the identification of potential barriers or facilitators to adopting this new mode of transportation. This population is particularly relevant, as

understanding and addressing their concerns and preferences can help drive the adoption of SAVs and reduce reliance on privately owned vehicles.

The research concentrated on the United Kingdom as the geographic region of interest. This choice allowed for consideration of the unique context and characteristics of the UK transportation landscape, including the existing infrastructure, public transit options, and cultural attitudes towards car ownership and usage. By focusing on the UK, the research was tailored to address specific regional challenges and opportunities, ensuring that findings are more relevant and applicable to the local context.

The timeframe for the study depends on the research design, data collection methods, and the specific objectives of the research. For instance, the study was conducted over a period of several months or a year, allowing for the collection of sufficient data, but without monitoring any changes in user acceptance over time. The selected timeframe aligned with the research objectives and the practical constraints of data collection and analysis.

These choices ensured that the research is tailored to address the unique context and challenges of the region and the targeted population, ultimately providing meaningful insights and actionable recommendations for promoting high-speed SAV adoption

1.5. Research Objectives and Questions

The objectives of the research are:

- To identify key factors, beyond the standard UTAUT2 constructs, that influence potential user acceptance of high-speed SAVs, particularly

focusing on the perspectives of UK private car owners and drivers through qualitative exploration.

- To develop and empirically test an extended UTAUT2 model that integrates the factors identified in the qualitative phase (specifically Service Quality and Trust), analysing the significance and interplay of these factors alongside original UTAUT2 predictors in explaining behavioural intention to use high-speed SAVs.

- To assess the methodological suitability of passive monoscopic VR, viewed on different user devices, for studying user acceptance of future SAVs by evaluating the level of presence elicited in simulated SAV interior environments.

The research question that this thesis seeks to answer is:

- What key factors influence user acceptance of high-speed SAVs among UK drivers, and what is the explanatory significance of integrating these factors (particularly Service Quality and Trust) into a modified UTAUT2 model?

1.6. Thesis Outline

This thesis is comprised of six chapters, each addressing a distinct aspect of the research project. Chapter 1 serves as the Introduction, setting the research context and offering a concise overview of the key concepts that will be utilized throughout the thesis.

In Chapter 2, the Literature Review, we delve into an extensive examination of the relevant literature in the research area, providing a solid foundation for the subsequent chapters.

Chapter 3 presents the first study conducted during this PhD project, detailing the findings from a focus group study that ultimately proposes a new acceptance model.

Chapter 4 builds upon the first study by presenting the findings from the second study, which involved data collection through an online survey instrument. This chapter tests the acceptance model proposed in the previous chapter and further develops our understanding of the subject.

Chapter 5 continues the analysis of the findings from the second study, but shifts its focus to the measured presence of monoscopic VR as a research tool, expanding our comprehension of this particular aspect.

Finally, in Chapter 6, Conclusions, we summarise the key findings from this research, exploring their implications and providing suggestions for future research in the field.

Chapter 2

Literature Review

Chapter 2 Literature Review

This chapter provides a comprehensive literature review on the acceptance of Shared Automated Vehicles (SAVs), a subject of growing importance given the swift advancements in mobility technologies and their potential to reshape urban transport systems.

The scope of this review extends over several interrelated areas that underpin the research, structured into two primary categories: descriptive context and theoretical frameworks. The initial sections of the chapter are intended to serve primarily as descriptive technical and operational context. Specifically, the review examines: (1) the Society of Automotive Engineers (SAE) levels of vehicle automation (Section 2.1), which delineate varying degrees of autonomy and offer a technical reference point for conceptualising SAVs; (2) the concept of shared mobility (Section 2.2), highlighting its capacity to provide alternatives to private car ownership as well as its associated benefits and challenges; and (3) the evolving domain of SAVs (Section 2.3), considering their potential to influence urban travel patterns, mitigate environmental burdens, and shape societal behaviour. Within these descriptive sections, assertions from established literature and industry standards are largely accepted without critical debate. This approach is intentionally adopted because these standards provide the universally accepted operational definitions, technical lexicons, and baseline parameters required to appropriately conceptualise and study future mobility paradigms.

Building upon this descriptive foundation, the later sections transition to a critical evaluation of the theoretical frameworks. This includes an examination of established models such as the Technology Acceptance Model (TAM) and the Unified Theory of Acceptance and Use of Technology (UTAUT), which guide the theoretical lens through

which SAV acceptance is examined. Furthermore, the review critically considers private vehicle ownership in relation to these emerging paradigms, particularly regarding how the advent of SAVs may disrupt prevailing models of car ownership. The final sections discuss Virtual Reality (VR) as a research tool, the methodological significance of presence, and its measurement within the context of this study.

The literature base for this review encompasses a wide range of sources, including peer-reviewed journal articles, conference proceedings, industry analyses, and government documents. Emphasis has been placed on materials published over the last decade to decade-and-a-half to ensure that the insights presented reflect current technological developments, societal shifts, and policy considerations. Where necessary, older seminal works are incorporated to supply historical context or foundational theoretical constructs. In recognition of the substantial transformations in mobility practices and travel behaviours - accelerated in many respects by the COVID-19 pandemic - recent studies have been prioritised so as to present the most relevant and up-to-date perspective on the evolving landscape of SAV acceptance.

2.1. Automated Vehicles

Automated vehicles (AVs) represent a significant technological development in the transportation sector, with the potential to revolutionise mobility systems. To provide a framework for understanding the different stages of vehicle automation, the Society of Automotive Engineers (SAE) developed a classification system that Levels of vehicle autonomation defines six levels of vehicle automation ranging from Level 0, with no automation, to Level 5, with full automation (SAE, 2021a).

These classifications of vehicle automation have allowed for more focused research and for researchers to have a common language. Within these six levels of driving automation, there are two main groups; (1) drivers monitor the driving task, for the first three levels 0 to 2, and (2) the system monitors the driving task, for levels 3 to 5. For level 3, as shown in Figure 1, the system can request the driver to take over control; i.e. the driver is the fallback in case the system encounters a task it cannot handle. For levels 4 and 5, the system is the fallback and is expected to handle all driving tasks.

The adoption of the SAE J3016 taxonomy in this thesis is entirely descriptive, and its definitions are accepted without question. It is appropriate to rely on these assertions because the SAE classification is the universally recognised industry standard (Nhtsa, 2020; Trypuz et al., 2024), utilised globally by regulators, governments, and automotive manufacturers (Hopkins and Schwanen, 2021) to benchmark technological progress. Rather than critically debating the nuances of these engineering definitions, this research utilises them as a necessary, objective baseline. Specifically, the formal definition of Level 4 (High Driving Automation) provides the exact technical boundaries required to situate the concept of SAVs within a realistic future context; one where the human driver is entirely removed from the dynamic driving task, which subsequently triggers the complex user acceptance dynamics investigated in this study.

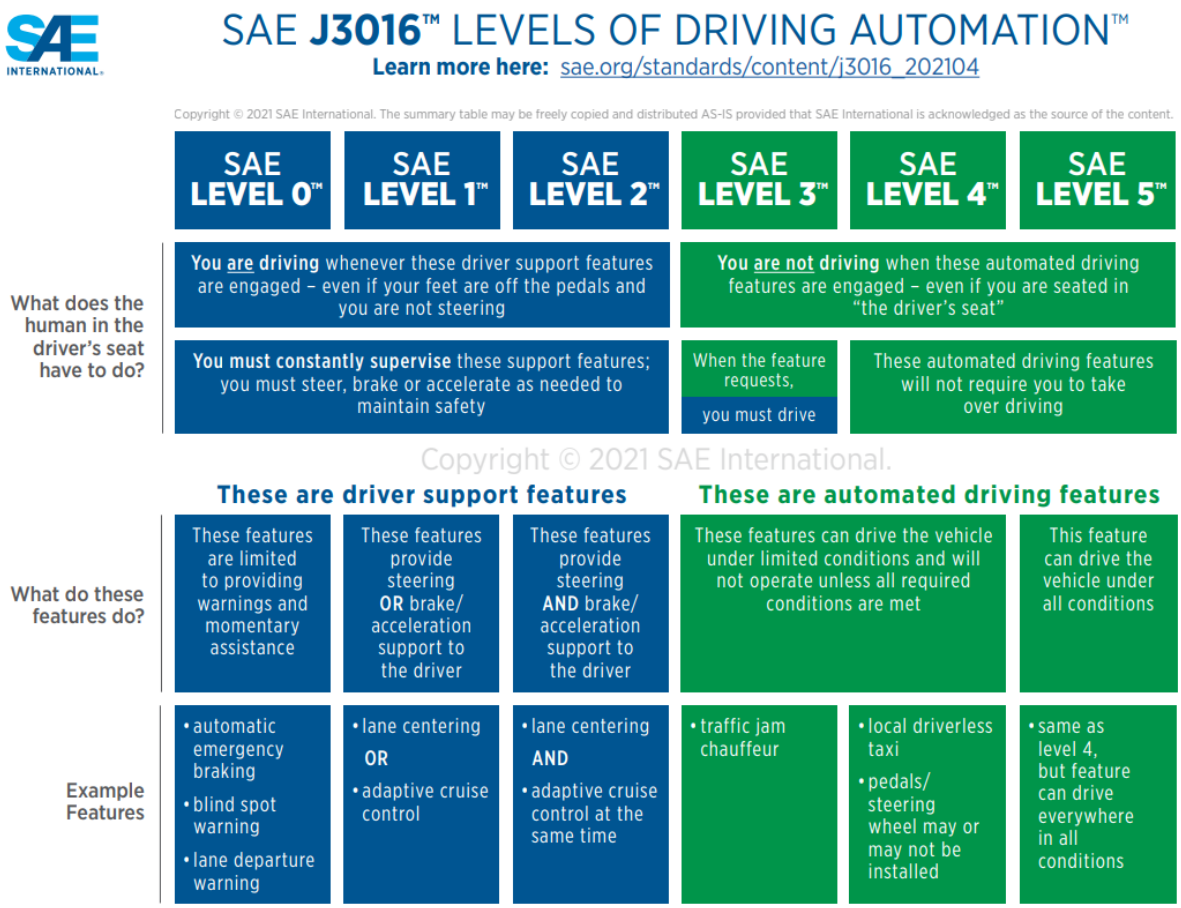

Figure 1: SAE J3016 Level of Driving Automation (SAE, 2021a)

Level 0 – No Driving Automation: The driver performs all the driving tasks with the aid of a few warning systems if necessary.

Level 1 – Driver Assistance: The system assists the driver by performing longitudinal driving tasks, while the driver performs the dynamic driving tasks.

Level 2 – Partial Driving Automation: The system assists the driver by performing both longitudinal and lateral dynamic driving tasks under defined use cases. The driver monitors the system's driving and the driving environment while remaining fully engaged in the driving tasks.

Level 3 – Conditional Driving Automation: The system performs both longitudinal and lateral dynamic driving tasks under certain use cases, and may initiate take over requests that require the driver to respond within a given time limit. The driver does not need to monitor the driving task.

Level 4 – High Driving Automation: The system performs both longitudinal and lateral dynamic driving tasks in all situations, for a given use case. This is the first level at in which the driver is not the fall-back.

Level 5 – Full Driving Automation: The system performs both longitudinal and lateral dynamic driving tasks in all situations, for the entire journey, up to the limits of human drivers.

The advancement of Automated Vehicle (AV) technology has stimulated extensive investigation across various disciplines, encompassing safety, user acceptance, and the broader social ramifications of transport automation. Studies indicate that as AV technology advances, especially at Levels 3 and beyond, it becomes increasingly imperative to address factors such as public trust in automation, the establishment of appropriate regulatory frameworks, and the development of supportive infrastructure (Bansal, Prateek et al., 2016; Milakis et al., 2017). These considerations are instrumental in shaping the rate at which AVs can be seamlessly integrated into mainstream mobility ecosystems.

Comprehending these levels is essential, with Level 4 automation being a cornerstone of the SAVs concept that is central to this research. By delineating this evolutionary trajectory of vehicle autonomy, this section supplies the technical groundwork necessary to inform subsequent discussions on the potential impacts and adoption hurdles associated with SAVs.

2.2. Shared Mobility

Shared mobility refers to the use of a vehicle by multiple individuals. This could be a car, mini-van, scooter, bicycle or any other vehicle that is typically used by individuals. It is an alternative transport strategy that provides users with short-term

access to a specific mode of transportation as and when needed, which could be either sequentially or concurrently (SAE, 2021b). Shared mobility can also increase the use of multimodal transport, reduce vehicle ownership, reduce vehicle miles travelled (VMT) in certain circumstances, and provide new ways to access goods and services (Shaheen, S. et al., 2016).

In a broader context, Shared Mobility refers to travel options that attempt to optimise the use of mobility resources that a society can afford, while decoupling their usage from their ownership. This term also refers to creative efforts that promote access to transportation as opposed to ownership of vehicles; in which individuals share material assets and intangible resources in order to provide mobility services to reach locations. The goal of Shared Mobility is to provide a variety of mobility options, hence boosting multimodality and decreasing transportation costs (Vecchio, 2018).

Recent popularity of shared mobility services is a result of technological advancements in mobile phones with location systems and mobile payment, economic shifts, and social and environmental issues associated with car ownership in urban areas (Shaheen, S. et al., 2017). The change from ownership to service usage, which is frequently advocated in sustainability ideas, is available in the majority of the world's cities through shared mobility networks. Although significant psychological dynamics based in Western society encourage vehicle ownership, the field of individual mobility is among the first in which companies have established the notion of shared mobility and the introduction of car-sharing organizations (Prettenthaler and Steininger, 1999).

Shared mobility is a broad term that refers to a wide range of new modes of transportation with varying use cases, business structures, and travel behaviour effects.

2.2.1. The benefits of Shared Mobility

Shared mobility offers an efficient and sustainable transportation system, providing numerous benefits for individuals, communities, and the environment. It several benefits such as reducing traffic congestion, promoting sustainability, increasing access to transport, etc. Shared mobility offers several key benefits, which are explained below:

These benefits underscore the growing importance of shared mobility as a solution to urban transportation challenges. By reducing the need for private vehicles, shared mobility can alleviate pressure on infrastructure, cut greenhouse gas emissions, and provide equitable access to transportation services. Furthermore, as automated technologies are increasingly integrated into shared mobility systems, these benefits are expected to be amplified, particularly through improved efficiency and reduced operational costs (Nemoto et al., 2021).

2.2.1.1. Reduces traffic congestion:

By reducing the number of privately owned vehicles on the road and encouraging the use of shared vehicles, shared mobility can help to reduce traffic congestion, leading to a faster and smoother flow of traffic (Alisoltani et al., 2021). By promoting transportation options that allow multiple individuals to use the same vehicle at different times, such as ride-hailing services, car-sharing programs, and bike-sharing systems, individuals can reduce the number of privately owned vehicles on the road, which in turn can lead to a reduction in traffic congestion (Overtoom et al., 2020). Traffic congestion occurs when there are too many vehicles on the road at the same time, resulting in slower speeds and longer travel times. By reducing the number of cars on the road through shared mobility, there will be fewer cars competing for the same road space, which can

result in faster and smoother flow of traffic. Moreover, shared mobility options can also help to reduce the overall demand for parking spaces, especially in urban areas where parking is limited (Overtoom et al., 2020). This can help to reduce the amount of space dedicated to parking, and instead repurpose it for other uses such as bike lanes, green spaces, or additional housing.

2.2.1.2. Promotes sustainability

Shared mobility has emerged as a potent concept that can promote sustainable and environmentally-friendly modes of transportation. By advocating for shared transportation options, such as electric cars or bicycles, shared mobility can play a pivotal role in reducing carbon emissions and other pollutants that exacerbate climate change and air pollution (Khattak and Khattak, 2023). The growing popularity of electric cars and e-bikes in shared mobility programs has enabled individuals to access these vehicles without the need for owning them, and this has contributed significantly to reducing the reliance on fossil-fuel-powered cars (Silva et al., 2022), which are a primary source of greenhouse gas emissions.

Furthermore, shared bikes and e-scooters have become a sustainable and convenient alternative to driving for short trips, minimising the number of car trips taken and, therefore, curbing emissions. Shared mobility programs can also incentivise and reward users for opting for more sustainable modes of transportation, such as offering discounts or rewards for using electric vehicles or for using shared mobility instead of driving alone. However, these incentives only attract users in the short term, and over a long period of time incentivised use was found to decline, as found by Hu, S. et al. (2021). By promoting sustainable modes of transportation and reducing the number of cars on the road, shared mobility can significantly enhance air quality and mitigate the

deleterious effects of transportation on the environment (Prettenthaler and Steininger, 1999).

Shared mobility is a crucial tool for reducing carbon emissions and fostering a more sustainable transportation system (Nemoto et al., 2021). Its impact on curbing carbon emissions and reducing reliance on fossil fuels is significant and merits greater attention. Therefore, promoting shared mobility options and sustainable transportation practices should be a top priority for policymakers and stakeholders in the transportation industry. The need to prioritise sustainable transportation practices cannot be overstated, given the urgent need to address the pressing environmental challenges of our time.

2.2.1.3. Increases access to transportation

Shared mobility can be particularly beneficial for individuals who do not have access to a personal vehicle, or who cannot afford to own a vehicle, as it provides a convenient and affordable alternative to private car ownership. By increasing access to transportation and providing affordable and convenient alternatives to private car ownership, shared mobility can help to reduce transportation inequities and improve accessibility for all individuals (Machado et al., 2018). This can be particularly important for low-income communities and individuals with limited mobility options (Kodransky and Lewenstein, 2014). In this way, shared mobility has the potential to improve transportation equity and provide a more inclusive transportation system for all individuals.

2.2.1.4. Cost saving benefits

One of the primary cost-saving benefits of shared mobility is that it allows individuals to save money on vehicle expenses that would otherwise be incurred by owning a personal vehicle (Shaheen & Cohen, 2013). Shared mobility options, such as car-sharing, ride-hailing, bike-sharing, and e-scooter rentals, can help individuals to save money in several ways (Fishman, Elliot et al., 2013; Clewlow and Mishra, 2017; Hollingsworth et al., 2019). Firstly, shared mobility reduces the need for individuals to purchase and maintain their own personal vehicle, which can be a significant cost-saving (Shaheen, S.A. and Cohen, 2013). Owning a vehicle typically involves a range of expenses such as vehicle purchase, insurance, maintenance, repairs, fuel, and parking fees. By using shared mobility services, individuals can avoid these expenses altogether or reduce them significantly (Litman, 2017). Secondly, shared mobility can provide a more affordable and flexible option for transportation (Clewlow and Mishra, 2017). For example, ride-hailing services like Uber or Lyft can provide a more cost-effective and flexible option than traditional taxis or owning a car (Clewlow and Mishra, 2017). Similarly, bike-sharing or e-scooter rentals can provide an affordable and convenient way to travel short distances, reducing the need for more expensive transportation options (Fishman, Elliot et al., 2013; Hollingsworth et al., 2019). Thirdly, shared mobility can reduce the cost of parking, which can be a significant expense in urban areas (Litman, 2017). By using shared mobility services, individuals can avoid the need to pay for parking or reduce the amount of time and money spent on finding a parking spot (Litman, 2017). Overall, shared mobility offers a range of cost-saving benefits for individuals, including reduced vehicle expenses, more affordable transportation options, and reduced parking costs (Shaheen, S.A. and Cohen, 2013; Clewlow and Mishra, 2017). By reducing the financial burden associated with

private car ownership, shared mobility can provide a more accessible and equitable transportation option for individuals from all income levels (Litman, 2017).

2.2.1.5. Enhanced mobility

Shared mobility can provide greater mobility options for people with disabilities, older adults, and those who live in areas with limited transportation options (Shaheen, Susan and Cohen, 2020). By providing accessible and affordable transportation options, shared mobility can help to improve the mobility and independence of these individuals, enabling them to access a wider range of activities and services (Ricci, 2015). For people with disabilities, shared mobility options such as ride-hailing services, wheelchair-accessible vehicles, and specialised transportation services can provide a more convenient and accessible option for getting around (Uber, 2022). These services can be particularly important in areas where public transportation is limited or inaccessible (Shaheen, Susan and Cohen, 2020). Older adults can also benefit from shared mobility options, which can provide a more convenient and cost-effective way to access transportation (Kim and Ulfarsson, 2019). Shared mobility options such as ride-hailing services or car-sharing programs can be a safer and more reliable option for older adults who may have difficulty driving or who no longer own a personal vehicle (Kim and Ulfarsson, 2019). Overall, shared mobility can provide greater mobility options for individuals who may otherwise have limited transportation choices, such as those with disabilities, older adults, or those living in areas with limited transportation options (Shaheen, S.A. et al., 2016). By providing accessible and affordable transportation options, shared mobility can help to improve the quality of life and independence of these individuals (Ricci, 2015).

2.2.1.6. Support for local economies

Shared mobility can provide new opportunities for local businesses and create new jobs in the transportation sector (Rayle et al., 2016). By promoting shared transportation options, shared mobility can help to support local businesses, particularly those that provide transportation services or related products (Fishman, Elliot et al., 2013; Hollingsworth et al., 2019). For example, ride-hailing services like Uber or Lyft can create opportunities for drivers to earn income by providing transportation services (Rayle et al., 2016). Similarly, car-sharing programs like Zipcar or car2go can create jobs in car maintenance and management (Shaheen, S.A. and Cohen, 2013). Moreover, shared mobility options such as bike-sharing or e-scooter rentals can create opportunities for local businesses that provide bike repair services or other related products (Fishman, Elliot et al., 2013). In addition, the operation and management of shared mobility systems require technical expertise, providing opportunities for employment in the technology and engineering sector (Shaheen, S.A. and Cohen, 2013). By promoting shared mobility, local governments can also support the growth of local transportation businesses and create new jobs in the transportation sector (Rayle et al., 2016). This can help to stimulate economic growth and support the development of more sustainable and equitable transportation systems. Furthermore, shared mobility can create new opportunities for entrepreneurship, particularly for individuals from underrepresented communities or those who may face barriers to traditional employment (Rayle et al., 2016). For example, ride-hailing services can provide opportunities for individuals who may not have access to traditional employment, such as those with disabilities or those who face discrimination in the job market (Rayle et al., 2016). Overall, shared mobility can create new opportunities for local businesses and job creation in the transportation sector,

supporting economic growth and creating new opportunities for individuals and communities (Shaheen, S.A. and Cohen, 2013)

The numerous key benefits offered by shared mobility are summarised in Table 1. These benefits underscore the growing importance of shared mobility as a solution to urban transportation challenges. By reducing the need for private vehicles, shared mobility can alleviate pressure on infrastructure, cut greenhouse gas emissions, and provide equitable access to transportation services. Furthermore, as automated technologies are increasingly integrated into shared mobility systems, these benefits are expected to be amplified, particularly through improved efficiency and reduced operational costs (Nemoto et al., 2021).

Table 1: Summary of key benefits offered by shared mobility

Benefit	Explanation	References
Reduces traffic congestion	By reducing the number of privately owned vehicles on the road, shared mobility decreases congestion and improves traffic flow.	(Overtoom et al., 2020; Alisoltani-Leclercq & Zargayouna, 2021)
Promotes sustainability	Shared mobility encourages the use of electric vehicles and reduces the need for fossil-fuel-powered cars, leading to lower carbon emissions.	(Khattak & Khattak, 2023; Silva et al., 2022)
Increases access to transportation	Provides affordable and flexible transportation options for individuals who may not have access to private vehicles, thus enhancing transportation equity.	(Machado et al., 2018; Kodransky & Lewenstein, 2014)
Cost savings	Shared mobility reduces the need for vehicle ownership, cutting costs related to vehicle purchase, maintenance, fuel, and parking.	(Shaheen & Cohen, 2013; Litman, 2017)
Enhanced mobility for vulnerable groups	Improves access for people with disabilities, the elderly, and individuals in areas with limited transport options.	(Shaheen & Cohen, 2020; Ricci, 2015)
Support for local economies	Shared mobility creates new jobs and business opportunities in transportation services and related industries.	(Fishman et al., 2013; Rayle et al., 2016)

2.2.2. Challenges facing shared mobility

Shared mobility, while offering many benefits, also faces several challenges, including:

2.2.2.1. Regulation

Diverse mobility-sharing paradigms, encompassing ride-hailing, car-sharing, and bike-sharing, grapple with diverse regulations across geographical boundaries and jurisdictions (Shaheen, S.A. and Cohen, 2013). This regulatory patchwork generates operational hurdles for enterprises with a multinational presence, simultaneously sparking perplexity among clients unsure of the governing principles for mobility-sharing within specific locales (Lavieri, P. S. and Bhat, 2019).

Spanning countries and jurisdictions, regulatory stipulations can incorporate manifold components, including licensing, insurance, safety, data privacy, and labour standards, among others (Fishman, E. and Schepers, 2016). Consequently, mobility-sharing firms operating across locations encounter a maze of divergent regulatory expectations (Kamargianni and Matyas, 2017). To further amplify confusion, customers may struggle to grasp locale-specific rules and regulations for shared mobility services (Chan and Shaheen, 2012). This obscurity can trigger miscommunications or altercations between clients and shared mobility companies, while also creating entry barriers for new market entrants unfamiliar with local regulatory landscapes (Sperling and Shaheen, 2018).

To mitigate these challenges, certain jurisdictions have created standardised regulations for shared mobility services, whereas others have embraced a more adaptable approach, accommodating local regulatory nuances (Bansal, P. and Kockelman,

2018). Complementing these efforts, some shared mobility providers have created internal policies and procedures to ensure adherence to local regulations while disseminating clear, consistent information to customers regarding governing rules and regulations within particular areas (Schaller, 2018). Ultimately, the absence of uniform regulations in the shared mobility sector can cause complications for both providers and customers. Nevertheless, by establishing standardised regulations and transparent communication strategies, local governments and shared mobility providers can cultivate a coherent and accessible ecosystem for all stakeholders (Kamargianni and Matyas, 2017).

2.2.2.2. Competition

The shared mobility market is a highly competitive industry, with a wide range of players vying for market share (Clewlow and Mishra, 2017). This competition can include both established players, such as ride-hailing giants Uber and Lyft, as well as smaller startups that focus on niche markets or specialised services (Rayle et al., 2016). This level of competition can make it challenging for companies to differentiate themselves from their competitors and attract customers, particularly in markets where multiple providers offer similar services (Zervas et al., 2017).

One of the key challenges of competition in the shared mobility market is the potential for price wars. With numerous providers competing for market share, companies may be tempted to lower prices in order to attract customers. However, this can create a race to the bottom, where companies are forced to lower prices to unsustainable levels in order to remain competitive (Shaheen, Susan and Cohen, 2019). This can lead to decreased profitability and a reduced ability to invest in new technologies or expand into new markets.

Another challenge of competition in the shared mobility market is the need for continuous innovation and differentiation. As the market becomes more crowded, it can be difficult for companies to stand out from their competitors and attract customers (Cohen & Sundararajan, 2015). This can require companies to continuously develop new and innovative services or technologies that differentiate them from their competitors and provide added value to customers. Furthermore, the high level of competition in the shared mobility market can create challenges for new entrants. Established players may have an advantage in terms of brand recognition and market share, making it difficult for new companies to gain a foothold in the industry. Overall, the high level of competition in the shared mobility market can create challenges for companies, particularly in terms of profitability and differentiation. To succeed in this competitive industry, companies must continuously innovate, differentiate themselves from their competitors, and remain agile in response to changing market conditions.

The challenges faced by shared mobility are summarised below in Table 2. Shared mobility systems require careful management and coordination among stakeholders, including local governments, transportation companies, and users, to overcome these challenges. Furthermore, as shared mobility services expand, the need for clear regulatory frameworks and investments in infrastructure becomes increasingly important to ensure their long-term viability and success.

Table 2: Summary of shared mobility challenges

Challenge	**Explanation**	**References**
Regulation	Shared mobility services face diverse regulations across jurisdictions, complicating their operation and scalability.	(Shaheen & Cohen, 2013; Lavieri & Bhat, 2019)
Competition	The highly competitive nature of the shared mobility market creates pressure on companies to differentiate themselves and maintain profitability.	(Clewlow & Mishra, 2017; Zervas, Proserpio & Byers, 2017)

Challenge	Explanation	References
Infrastructure requirements	Adequate infrastructure, such as charging stations and designated parking, is crucial for the successful implementation of shared mobility services.	(Milakis et al., 2017; Fagnant & Kockelman, 2014)
User acceptance	Public acceptance of shared mobility, particularly in relation to trust, safety, and convenience, remains a barrier to widespread adoption.	(Hohenberger et al., 2016; Hulse et al., 2018)

2.3. Shared Automated Vehicles

The intersection of shared mobility and automated vehicle technologies represents a significant opportunity for enhancing urban transportation systems. SAVs, discussed in detail in this section, combine the benefits of shared mobility with the advanced capabilities of automated driving systems. By removing the need for a human driver, SAVs can further reduce operational costs and increase efficiency, potentially transforming the future of transportation. However, the adoption of SAVs will depend on addressing the challenges facing shared mobility, such as regulation, infrastructure, and public acceptance, which are critical to the widespread deployment of these systems.

SAVs are a socio-technical solution for efficiently meeting mobility demands. It has been argued that they can contribute to enhanced sustainable transportation through on-demand shared mobility (Bojkovic, 2018), as well as reducing private car ownership by selling mobility rather than vehicles. Other advantages of SAVs include reduced traffic congestion, increased safety (Piao et al., 2016), and enhanced mobility for non-drivers such as the elderly and disabled (Alessandrini et al., 2015). Reducing traffic congestion through the use of SAVs is a difficult task since certain users are less ready to embrace future high-speed SAVs than others.

SAVs combine components of traditional carsharing and ride-sharing with vehicle automation (Fagnant, D. and Kockelman, 2014); mixing shared vehicles with complete

self-driving automation (the highest levels of vehicle automation, Levels 4 and 5). At these levels, the system, rather than the driver, is the fallback in the event of a breakdown, and the vehicle handles all safety-critical driving activities. As a result, the system may be monitored even without a driver. A SAV is a vehicle that would not be owned by the passengers it transports, similar to a taxi, but it is also an automated vehicle. Due to present early prototype restrictions, SAVs are often called RoboTaxis, which are slow-moving vehicles with a peak speed of 24km/h (Maghraoui et al., 2020).

2.3.1. Types of Shared Automated Vehicles

SAVs can be categorised into different types based on their operation, ownership, and service models (Fagnant, D. and Kockelman, 2014). The main types of SAVs include:

Shared Autonomous Cars: These are traditional passenger cars equipped with autonomous driving technology, allowing them to operate without human intervention (Fagnant and Kockelman, 2014). Users can access these vehicles through a carsharing platform, where multiple individuals share the use of a single vehicle (Shaheen, S. et al., 2016). According to (Shaheen, S. et al., 2016), this type of SAV can be further divided into two sub-categories:

- Station-based carsharing: Vehicles are picked up and dropped off at designated stations or parking spots.
- Free-floating carsharing: Vehicles can be picked up and dropped off anywhere within a defined service area, offering more flexibility to users.

Shared Autonomous Microtransit: This type of SAV refers to small, multi-passenger vehicles such as shuttles or vans that provide on-demand or fixed-route

transportation services within a defined area (Alessandrini et al., 2015). Passengers share the vehicle and may have to walk a short distance to reach pick-up or drop-off points.

Shared Autonomous Ridesharing: In this model, autonomous vehicles are used for on-demand ridesharing services, similar to current non-autonomous ridesharing services like Uber or Lyft (Fagnant, D. and Kockelman, 2014). Passengers can request a ride through a smartphone app, and the SAV picks them up at their location and drops them off at their destination. Passengers may share the vehicle with other riders who have similar routes, leading to increased vehicle occupancy and reduced traffic congestion.

Shared Autonomous Buses: Autonomous buses can operate on fixed routes or as demand-responsive transit services (Alessandrini et al., 2015). They can provide public transportation services in urban or rural areas, with the potential for increased service frequency and efficiency due to the automation technology.

2.3.2. Benefits of Shared Automated Vehicles

SAVs have been heralded as a transformative solution with the potential to revolutionise urban transportation systems. By combining vehicle automation with shared mobility, SAVs promise to deliver a range of benefits that could contribute to more efficient, safe, and sustainable transportation. This section explores the key advantages of SAVs, including reduced traffic congestion, increased safety, enhanced mobility for non-drivers, and potential environmental benefits.

Firstly, one of the most significant benefits of SAVs is their potential to alleviate traffic congestion. By promoting shared mobility, SAVs can increase vehicle occupancy

rates and reduce the overall number of vehicles on the road, thus mitigating congestion and reducing travel times (ITF, 2015; Dia and Javanshour, 2017). Furthermore, the advanced communication and navigation systems in SAVs can enable more efficient routing and traffic management, further contributing to reduced congestion (Fagnant and Kockelman, 2014).

Secondly, SAVs have the potential to enhance road safety. The integration of autonomous driving technology can eliminate human error, which is responsible for a large proportion of traffic accidents (Piao et al., 2016). By leveraging advanced sensors, machine learning algorithms, and real-time data processing, SAVs can quickly react to dynamic traffic conditions, make informed decisions, and execute safe manoeuvres, thus reducing the likelihood of collisions and improving overall traffic safety (Alessandrini et al., 2015).

Thirdly, SAVs can provide improved mobility for individuals who are unable to drive or have limited access to private vehicles, such as the elderly, disabled, and economically disadvantaged populations. By offering on-demand, accessible transportation services, SAVs can enhance mobility options for these groups and contribute to more inclusive and equitable transportation systems (Alessandrini et al., 2015).

Lastly, SAVs hold the potential for significant environmental benefits. By optimising vehicle use and promoting shared mobility, SAVs can contribute to reduced energy consumption and lower greenhouse gas emissions (Greenblatt and Shaheen, 2015; Wadud et al., 2016). Additionally, the potential integration of electric vehicles within SAV fleets can further amplify these environmental benefits by reducing

dependence on fossil fuels and promoting the use of renewable energy sources (Wadud et al., 2016).

In conclusion, SAVs present numerous advantages that can contribute to more efficient, safe, and sustainable transportation systems. However, realising these benefits will require addressing the various challenges facing SAVs, including technological, legal, regulatory, infrastructure, and user acceptance issues. By tackling these challenges, SAVs have the potential to significantly improve urban transportation and contribute to the creation of more liveable and sustainable cities.

The key benefits of SAVs discussed in this section are summarised in Table 4 below.

Table 3: Key benefits of Shared Automated Vehicles

Benefit	Explanation	References
Reduced Traffic Congestion	By increasing vehicle occupancy, optimizing routing, and reducing the total number of vehicles on the road, SAVs can mitigate traffic jams and shorten travel times.	(ITF, 2015; Dia and Javanshour, 2017; Fagnant and Kockelman, 2014)
Increased Road Safety	SAVs can eliminate human error, a leading cause of traffic accidents, by using advanced sensors and algorithms to navigate traffic and avoid collisions safely.	(Piao et al., 2016; Alessandrini et al., 2015)
Enhanced Mobility & Accessibility	They provide on-demand, accessible transport for non-drivers, such as the elderly, disabled, and economically disadvantaged individuals, promoting more inclusive transportation.	(Alessandrini et al., 2015)
Environmental Benefits	Through optimized use, shared models, and the integration of electric powertrains, SAVs can lower energy consumption and greenhouse gas emissions.	(Greenblatt and Shaheen, 2015; Wadud et al., 2016)

However, realising these benefits will require addressing the various challenges facing SAVs, including technological, legal, regulatory, infrastructure, and user acceptance issues. By tackling these challenges, SAVs have the potential to significantly

improve urban transportation and contribute to the creation of more liveable and sustainable cities.

2.3.3. Challenges facing Shared Automated Vehicles

SAVs hold great potential for transforming urban transportation systems, but they also face several challenges that need to be addressed before widespread adoption can occur. Some of the key challenges include:

Technological challenges: Developing reliable, safe, and efficient autonomous driving technology is a significant challenge. Issues such as sensor fusion, machine learning, decision-making algorithms, and fail-safe mechanisms need to be perfected to ensure safe and smooth operation in various traffic and weather conditions (Bansal et al., 2016).

Legal and regulatory challenges: The legal and regulatory frameworks for SAVs are still under development in many countries. Policymakers need to establish clear rules and standards for vehicle testing, certification, liability, and insurance, as well as address issues related to data privacy and cybersecurity (Anderson et al., 2014).

Infrastructure challenges: SAVs may require dedicated infrastructure, such as charging stations for electric vehicles, pick-up and drop-off zones, and communication systems for vehicle-to-vehicle (V2V) and vehicle-to-infrastructure (V2I) connectivity. Investments in infrastructure and coordination among various stakeholders will be necessary to support the operation of SAVs (Milakis et al., 2017).

User acceptance challenges: As mentioned in the previous response, factors such as perceived safety, trust, perceived usefulness, ease of use, and cost can influence user acceptance of SAVs. Addressing these factors and ensuring that SAVs cater to the diverse

needs of users is essential for their successful adoption (Hohenberger et al., 2016; Hulse et al., 2018).

Environmental challenges: While SAVs have the potential to reduce energy consumption and greenhouse gas emissions, they may also lead to increased vehicle miles travelled and a rebound effect that could offset their environmental benefits. Policymakers and industry stakeholders need to promote sustainable adoption strategies and develop policies that maximise the environmental benefits of SAVs (Wadud et al., 2016).

Social and equity challenges: There is a risk that the benefits of SAVs may not be equally distributed among different socio-economic groups, leading to potential disparities in access to and affordability of these services. Ensuring that SAVs are accessible and affordable to all users, including those with low incomes, disabilities, and those living in rural areas, is critical for achieving equitable transportation systems (Rigolon et al., 2018).

Labour market challenges: The widespread adoption of SAVs could lead to job displacement in the transportation sector, particularly for drivers in taxi, ridesharing, and public transportation services. Policymakers need to develop strategies to support workforce transition and retraining to help affected workers adapt to the changing labour market (Frey and Osborne, 2017).

The challenges facing SAVs are summarised in Table 4 below. Addressing these challenges will require a coordinated effort from policymakers, industry stakeholders, and researchers to ensure that SAVs can fulfil their potential for enhancing sustainable transportation systems.

Table 4: Summary of challenges facing SAVs

Challenge	Explanation	References
Technological Development	Issues such as sensor fusion, machine learning algorithms, and safety mechanisms need to be perfected to ensure reliable and safe operation.	(Bansal et al., 2016)
Regulatory Frameworks	Legal and regulatory systems governing SAV deployment are still under development in many countries, creating uncertainty for stakeholders.	(Anderson et al., 2014)
Infrastructure Needs	The success of SAVs depends on the availability of dedicated infrastructure, including charging stations and V2X (vehicle-to-everything) communication systems.	(Milakis et al., 2017)
User Acceptance	Public trust in autonomous technology, perceptions of safety, and willingness to share rides with strangers are critical factors in SAV adoption.	(Hohenberger et al., 2016; Piao et al., 2016)
Environmental Impact	While SAVs could reduce emissions, they may also lead to increased vehicle miles travelled (VMT) if poorly managed, offsetting environmental benefits.	(Wadud et al., 2016)
Equity and Accessibility	SAVs need to be accessible to all socio-economic groups to ensure equitable transportation systems. Otherwise, there is a risk of widening transportation inequality.	(Rigolon et al., 2018)

2.3.4. The impact of Shared Automated Vehicles on traffic congestion and parking space

SAVs have the potential to significantly affect both traffic congestion and parking space requirements in urban areas. The following sections will discuss the impact of SAVs on congestion and parking space in greater detail.

SAVs can potentially reduce traffic congestion in several ways:

Increased vehicle occupancy: By promoting shared mobility, SAVs can increase vehicle occupancy rates, which leads to a reduction in the overall number of vehicles on the road. This reduction in vehicle numbers can result in decreased traffic congestion (ITF, 2015; Dia and Javanshour, 2017).

Efficient routing and traffic management: Advanced communication and navigation systems in SAVs can enable more efficient routing, traffic management, and coordination between vehicles. This optimization can help minimise traffic jams, reduce delays, and improve overall traffic flow (Fagnant and Kockelman, 2014).

Reduced demand for on-street parking: Since SAVs can be summoned on-demand, they can potentially reduce the need for on-street parking, which can free up road space and contribute to decreased congestion (Zhang et al., 2015).

However, it is essential to consider that SAVs could also lead to increased vehicle miles travelled (VMT) due to the convenience and accessibility of these services, potentially offsetting the congestion reduction benefits (Wadud et al., 2016). Therefore, policies and strategies that manage VMT and promote the sustainable use of SAVs will be crucial to maximising their potential for reducing congestion.

SAVs have the potential to significantly reduce the demand for parking spaces in urban areas:

Reduced need for private vehicle ownership: By providing convenient and affordable transportation alternatives, SAVs can potentially reduce private car ownership, leading to decreased demand for residential and workplace parking spaces (Bojkovic, 2018).

Efficient parking management: Since SAVs can operate autonomously, they can park themselves in designated parking areas when not in use, optimising the use of available parking spaces and reducing the need for large parking lots or structures (Zhang and Wang, 2020).

Re-allocation of urban space: As the demand for parking decreases, valuable urban land currently occupied by parking lots and structures can be repurposed for other uses, such as green spaces, commercial developments, or housing, contributing to more efficient and sustainable urban planning (Zhang and Wang, 2020).

2.3.5. The impact of Shared Automated Vehicles on the cost of transportation

The widespread adoption of SAVs is expected to have a significant impact on the cost of transportation for both individuals and society as a whole. The following sections discuss the various factors influencing the cost of transportation and how they may change with the introduction of SAVs.

Vehicle ownership and operating costs: As SAVs promote shared mobility and reduce the need for private vehicle ownership, individuals can potentially save on vehicle purchase costs, insurance, maintenance, and depreciation (Bojkovic, 2018). Additionally, SAVs can enable more efficient use of vehicles, which can lead to lower operating costs per mile for fleet operators and service providers (Fagnant and Kockelman, 2014).

Fuel and energy costs: SAVs are likely to be electric or powered by alternative fuels, which can offer lower fuel costs compared to traditional gasoline or diesel vehicles (Wadud et al., 2016). Moreover, the efficient routing and traffic management capabilities of SAVs can lead to reduced energy consumption and further contribute to lower fuel costs (Fagnant and Kockelman, 2014).

Parking costs: With SAVs providing on-demand transportation services, the need for parking spaces, particularly in urban areas, may decrease. This reduction in parking demand can translate into cost savings for individuals who would no longer need to pay

for parking or for cities that can repurpose or reduce parking infrastructure (Zhang and Wang, 2020).

Public transportation costs: The integration of SAVs into public transportation systems, such as demand-responsive transit services and autonomous buses, can potentially lead to more efficient and cost-effective public transportation operations (Alessandrini et al., 2015). This efficiency can result in lower costs for public transportation providers and, potentially, reduced fares for passengers.

However, it is essential to consider that some factors may counteract these potential cost savings. For example, the initial capital costs of acquiring and deploying SAVs may be high, particularly for advanced autonomous driving technology and electric vehicle components (Bansal, Prateek et al., 2016). Additionally, there may be costs associated with upgrading and maintaining the necessary infrastructure, such as charging stations and communication systems (Milakis et al., 2017). Finally, regulatory and policy measures aimed at managing the potential negative impacts of SAVs, such as increased vehicle miles travelled, may introduce new costs or taxes that could influence the overall cost of transportation (Wadud et al., 2016).

2.3.6. Passenger willingness to share trips with strangers in Shared Automated Vehicles

Passenger willingness to share trips with strangers in SAVs is an important factor influencing the adoption and success of these services. While some passengers may be open to sharing rides with others to save on travel costs and contribute to reduced traffic congestion, others may prefer the privacy and comfort of a private vehicle. The extent to which passengers are willing to share trips in SAVs can vary depending on several factors,

such as individual preferences, socio-demographic characteristics, trip characteristics, and perceived benefits.

Individual preferences: Passengers' willingness to share rides can be influenced by their attitudes towards sharing, social interaction, and personal space. Some passengers may be more comfortable with sharing rides than others, depending on their personality traits, cultural background, and previous experiences (Schoettle and Sivak, 2014).

Socio-demographic characteristics: Age, gender, income, and other socio-demographic factors can also influence passengers' willingness to share rides in SAVs. For example, younger passengers may be more open to sharing rides, as they may be more familiar with and accepting of sharing economy services (Hohenberger et al., 2016). Additionally, passengers with lower incomes may be more inclined to share rides to save on transportation costs.

Trip characteristics: The nature of the trip, such as the distance, purpose, and time of day, can also impact passengers' willingness to share rides. For instance, passengers may be more open to sharing rides for shorter trips, while longer trips may be perceived as less desirable for sharing due to potential discomfort (Hohenberger et al., 2016). Similarly, passengers may be more willing to share rides for commuting or leisure trips, compared to trips where they need privacy or have time-sensitive appointments.

Perceived benefits: Passengers' willingness to share trips in SAVs can also be influenced by their perception of the benefits associated with ride-sharing, such as cost savings, reduced travel times, and environmental sustainability (Hohenberger et al.,

2016). Those who perceive these benefits as significant and important may be more likely to share rides in SAVs.

2.3.7. Passenger attitudes towards SAVs

Passenger attitudes towards SAVs can play a crucial role in their adoption and widespread use. These attitudes can be influenced by various factors, including trust in technology, perceived safety, convenience, cost, privacy, and environmental concerns. It is essential to recognise that attitudes can vary significantly among individuals and populations, and may change over time as technology evolves and becomes more familiar. Here, we outline some general passenger attitudes towards SAVs:

Trust in technology: Trust in the autonomous driving technology of SAVs is a significant factor affecting passenger attitudes. Some passengers may be sceptical of the technology's ability to safely navigate complex traffic situations, while others may be more trusting and accepting (Kyriakidis et al., 2015). Familiarity with and exposure to autonomous vehicles can help build trust over time (Hohenberger et al., 2016).

Perceived safety: Concerns about the safety of SAVs, both for passengers and other road users, can influence attitudes towards their adoption. Ensuring that SAVs can demonstrate a strong safety record through rigorous testing and validation can help address these concerns and improve passenger acceptance (Piao et al., 2016).

Convenience and accessibility: The potential for SAVs to provide on-demand, door-to-door transportation services can be appealing to many passengers, particularly those with limited access to private vehicles or public transportation (Alessandrini et al., 2015). However, concerns about service reliability, wait times, and the ability of SAVs to

serve passengers with special needs, such as the elderly and disabled, can influence attitudes (Hohenberger et al., 2016).

Cost: Passenger attitudes towards SAVs can also be influenced by the perceived affordability of these services. If SAVs are seen as a cost-effective alternative to private vehicle ownership or other transportation options, they may be more attractive to potential users (Bojkovic, 2018).

Privacy and social interaction: Some passengers may have concerns about privacy and the prospect of sharing rides with strangers in SAVs. These concerns can influence attitudes and the willingness to use shared mobility services (Schoettle and Sivak, 2014).

Environmental concerns: Passengers who are environmentally conscious may have a positive attitude towards SAVs, particularly if they perceive them as contributing to reduced traffic congestion, lower greenhouse gas emissions, and increased use of renewable energy sources (Wadud et al., 2016).

2.4. Private Vehicle Ownership

Private vehicle ownership has long been associated with personal freedom, convenience, and status in many societies around the world. However, in recent years, the drawbacks of personal car ownership have become increasingly apparent, prompting discussions about more sustainable and efficient transportation alternatives (Sperling & Gordon, 2009).

One of the primary concerns surrounding private vehicle ownership is its contribution to traffic congestion. As the number of privately-owned vehicles increases, traffic congestion in urban areas worsens, leading to longer commutes and reduced productivity (Small & Verhoef, 2007). According to the Texas A&M Transportation

Institute, American drivers wasted an average of 54 hours in traffic in 2019, costing the U.S. economy $166 billion in wasted time and fuel (Schrank, Eisele & Lomax, 2021).

Another critical issue is the environmental impact of private vehicles. Personal cars are responsible for a significant portion of greenhouse gas emissions, contributing to climate change and air pollution. In 2019, the transportation sector accounted for 29% of total U.S. greenhouse gas emissions, with the majority of these emissions coming from cars and light trucks (U.S. EPA, 2021). Moreover, air pollution from vehicle exhaust has been linked to various health problems, including respiratory diseases and premature deaths (World Health Organization, 2018).

Despite these concerns, private vehicle ownership remains popular due to its perceived benefits, such as convenience, comfort, and personal freedom. However, alternative transportation options, such as public transit, ridesharing, and cycling, have gained traction in recent years (Shaheen, Cohen & Zohdy, 2016). These alternatives can help alleviate congestion, reduce greenhouse gas emissions, and improve overall urban liveability.

Furthermore, emerging technologies, such as electric vehicles (EVs) and autonomous vehicles (AVs), have the potential to revolutionise personal transportation, offering more sustainable and efficient solutions (Hawkins et al., 2013; Fagnant & Kockelman, 2015). However, the widespread adoption of these technologies will require significant investments in infrastructure, regulatory frameworks, and public acceptance.

2.4.1. Private Vehicle Ownership in the UK

Private vehicle ownership in the UK has experienced significant growth over the past few decades, with over 31.7 million cars registered in 2020 (Department for

Transport, 2021). However, the increasing number of privately-owned vehicles has led to concerns regarding traffic congestion, air pollution, and climate change.

In the UK, road transport is responsible for 27% of total greenhouse gas emissions, with private vehicles accounting for a considerable proportion of this figure (Department for Business, Energy & Industrial Strategy, 2020). Consequently, the UK government has set ambitious targets for reducing emissions, including a ban on the sale of new petrol and diesel cars by 2030 and a commitment to achieve net-zero emissions by 2050 (Prime Minister's Office, 2020).

To promote greener transportation, the UK has seen a surge in the adoption of electric vehicles (EVs), with registrations increasing from 3,500 in 2013 to over 300,000 by the end of 2020 (SMMT, 2021). Furthermore, the UK government has introduced various incentives, such as the Plug-in Car Grant and the Electric Vehicle Homecharge Scheme, to encourage EV uptake (OLEV, 2021).

Despite the growth in EV adoption, private vehicle ownership still presents challenges regarding traffic congestion and air quality, particularly in urban areas. Therefore, efforts to promote public transportation, cycling, and walking as alternatives to private cars remain crucial for addressing these issues (Department for Transport, 2017).

The COVID-19 pandemic introduced further complexity to the issue of vehicle ownership. While an initial surge in demand for private vehicles emerged during the pandemic due to apprehensions regarding the safety of public transportation (OICA, 2021), emerging post-pandemic trends suggest that this increase may be transitory. Many urban areas are now making significant investments in alternative transport

infrastructures and actively encouraging the uptake of shared mobility services (Shaheen, Cohen & Zohdy, 2021). The long-term repercussions of the pandemic on vehicle ownership remain uncertain, but it has undoubtedly accelerated discussions surrounding the future trajectory of urban mobility and the potential roles of shared and automated transport systems.

Private vehicles constitute a substantial source of greenhouse gas emissions and air pollution. In 2019, the transportation sector accounted for 29% of total U.S. greenhouse gas emissions, with the majority attributable to cars and light-duty trucks (U.S. EPA, 2021). Likewise, in the United Kingdom, road transport contributed 27% of overall greenhouse gas emissions, with private vehicles playing a pivotal role (Department for Business, Energy & Industrial Strategy, 2020). These emissions exacerbate climate change and carry serious public health implications, including heightened risks of respiratory ailments and premature mortality (World Health Organization, 2018).

The environmental ramifications of widespread private vehicle ownership have prompted governmental interventions aimed at curtailing emissions. In the UK, for example, the government has outlined ambitious targets to prohibit the sale of new petrol and diesel cars by 2030, as part of its broader strategy to achieve net-zero emissions by 2050 (Prime Minister's Office, 2020). Such policy measures are incentivising both consumers and manufacturers to embrace more sustainable alternatives, including electric vehicles (EVs) and shared mobility platforms.

In recent years, shifts in consumer preferences have begun to challenge the traditional car ownership model, particularly among younger demographics and urban dwellers. Rising costs of owning and maintaining private vehicles, coupled with an expanding menu of alternative transport options and a growing collective consciousness of environmental issues, have all contributed to this trend (Shaheen et al., 2016). Shared mobility services, such as car-sharing and ride-hailing, offer flexible, cost-effective substitutes that allow users to access vehicles as needed, without the financial and ecological encumbrances of individual ownership.

Technological advancements, notably in the fields of electric and autonomous vehicles, further strengthen this shift. As EVs become more affordable, and as charging networks expand, increasing numbers of consumers view them as viable, eco-friendly replacements for conventional petrol- or diesel-powered cars (SMMT, 2021). In a similar vein, the advent of SAVs has the potential to radically alter the concept of private vehicle ownership by offering on-demand, autonomous transport services that deliver the convenience and personalisation of private cars, yet without the necessity of maintaining individual ownership.

2.4.2. Typical trip types for private vehicles in the UK

Despite the proliferation of shared mobility services, private vehicles continue to dominate many types of trips in the United Kingdom. According to the National Travel Survey (2019), 68% of commuting journeys in England are undertaken by car, either as driver or passenger. This pattern persists despite ongoing efforts to encourage alternative transport options such as public transport, cycling, and walking (Department for Transport, 2020). Notably, the most recent data from the 2023 National Travel Survey

indicate that car use for commuting has actually risen, with 70% of commuting trips in urban areas outside London and 81% in rural areas now made by car.

Private vehicles remain the preferred means of transport for shopping, with 61% of shopping trips in England undertaken by car (Mackett, 2014). The 2023 National Travel Survey figures for the UK show this proportion has since grown to approximately 67%, underscoring an enduring dependence on private cars for shopping purposes. The prevalence of out-of-town retail parks, coupled with the decline of the traditional high street, has reinforced this reliance. A similar pattern emerges for social and recreational outings, where 63% of these journeys are made by car (Chatterjee et al., 2018). In fact, the latest data from the UK's 2023 National Travel Survey show that this figure has now risen to about 65%, confirming the continued importance of private vehicles for activities where flexibility and convenience are paramount. These figures on typical trip types are summarised in Figure 2 below.

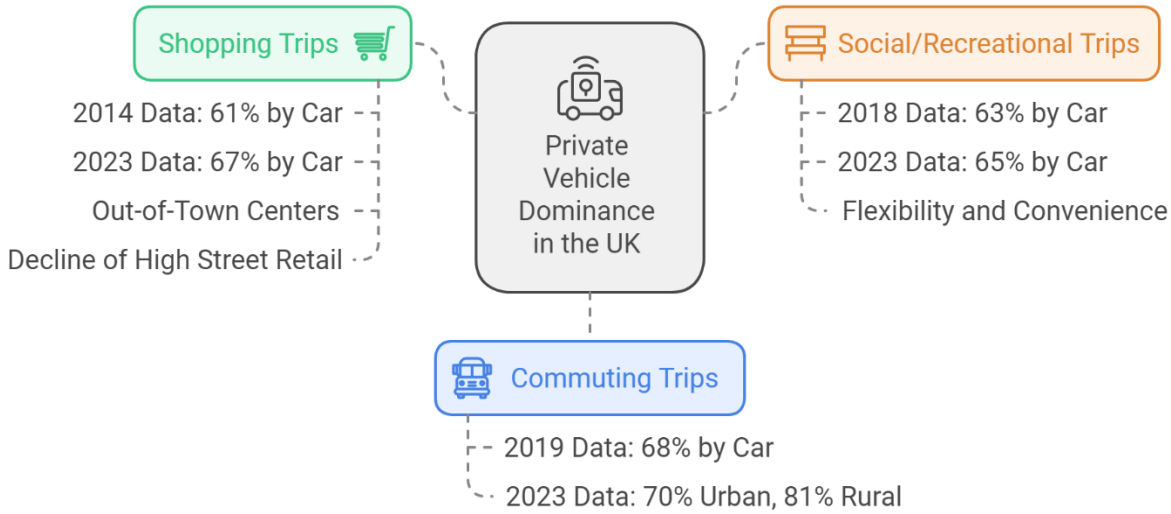

Figure 2: Private Vehicle Dominance in the UK

2.4.3. The impact of SAVs on private vehicle ownership

The introduction of SAVs has the potential to significantly impact private vehicle ownership patterns. By offering a convenient, cost-effective, and flexible mode of transportation, SAVs could reduce the need for individual car ownership, leading to a shift towards a shared mobility model. However, the extent of this impact will depend on several factors, including the cost of SAV services, accessibility, public acceptance, and regulatory frameworks.

One of the primary reasons for private vehicle ownership is the convenience and flexibility it provides. SAVs have the potential to replicate or even surpass this level of convenience by offering on-demand mobility services, without the need for users to drive, park, or maintain a vehicle (Fagnant & Kockelman, 2015). This could make SAVs an attractive alternative to private car ownership, particularly for urban dwellers and those with limited access to public transportation.

The cost of using SAVs compared to owning a private vehicle will also play a crucial role in determining their impact on private vehicle ownership. Shared mobility services could reduce the overall cost of transportation by eliminating upfront vehicle purchase costs, maintenance expenses, and insurance fees (Zhang et al., 2018). Additionally, the efficient use of resources in shared mobility systems could lead to reduced congestion and increased utilisation of vehicles, further lowering transportation costs (Burns et al., 2013).

However, several challenges and uncertainties could influence the adoption of SAVs and their effect on private vehicle ownership. Public acceptance of SAVs will depend on factors such as trust in automated driving technology, perceived safety, data privacy,

and the willingness to share rides with strangers (Krueger et al., 2016). Moreover, the development and implementation of appropriate regulatory frameworks, infrastructure, and cybersecurity measures will be necessary to facilitate the widespread adoption of SAVs (Fagnant & Kockelman, 2015).

2.5. Acceptance

In the context of technology acceptance, acceptance refers to the willingness of individuals or groups to adopt, use, and integrate a new technology into their daily lives or work processes (Davis, 1989). It encompasses the factors that influence an individual's decision to adopt a technology, including perceived usefulness, ease of use, social influence, and compatibility with existing practices or values. Technology acceptance is a crucial aspect to consider when introducing new technologies, as it can impact the rate of adoption, user satisfaction, and the overall success of the technology in achieving its intended purpose. Acceptance is some times confused with acceptability.

While acceptance and acceptability are related, they are distinct concepts within the context of technology adoption. As already discussed above, acceptance refers to the willingness of individuals or groups to adopt, use, and integrate new technology into their daily lives or work processes (Davis, 1989; Venkatesh et al., 2003). It encompasses factors that influence an individual's decision to adopt a technology, such as perceived usefulness, ease of use, and social influence. On the other hand, acceptability concerns the extent to which a technology is deemed suitable, appropriate, or desirable by users or stakeholders (Adell et al., 2014). Acceptability can be influenced by factors like safety, ethics, privacy, and the overall impact of the technology on society. While acceptance focuses on an individual's actual adoption and use of technology, acceptability addresses the broader attitudes and perceptions that shape the technology's reception within a

particular social context. Understanding both acceptance and acceptability is crucial to ensuring the successful implementation and long-term sustainability of new technologies.

2.5.1. Measuring Acceptance

2.5.1.1. Technology Acceptance Model (TAM)

The Technology Acceptance Model (TAM) was developed by Davis (1989) to help predict the adoption and use of information technology (IT). Davis suggested that individuals formed a conscious intention to use IT, through rational cognitive processes. The intention to use is influenced by the extent to which the individual believes the IT would improve their performance (perceived usefulness) and the degree to which the individual believes using the IT would be easy or difficult to use (perceived ease of use).

2.5.1.2. Unified Theory of Acceptance and Use of Technology (UTAUT)

Venkatesh et al. (2003) expanded on TAM by creating UTAUT, which integrated the Theory of Reasoned Action (Ajzen & Fishbein, 1980), Technology Acceptance Model (Davis, 1989), the Theory of Planned Behaviour (TPB) (Ajzen, 1991), the Model of PC Utilisation (Thompson et al., 1991), Motivational Model (Davis, et al., 1992), a combined model of TAM and TPB (Taylor and Todd, 1995), Social Cognitive Theory (Compeau & Higgins, 1995) and, finally, the Innovation Diffusion Theory (Rogers, 1995). UTAUT 'unified' the eight most significant models of individual acceptance. Just like the Theory of Planned Behaviour, UTAUT assumes that technology acceptance is the result of rational processes, through controlled and deliberate reasoning (Venkatesh et al., 2003).

Below are descriptions of the UTAUT constructs that influence BI, taken from Venkatesh et al. (2003), but explained in the context of vehicles:

Performance Expectancy (PE) – the degree to which an individual believes that using the system will help to reach driving performance goals. The constructs used to build performance expectancy are: (1) perceived usefulness from the Technology Acceptance Model (TAM), (2) relative advantage from the Innovation Diffusion Theory (IDT) and (3) outcome expectations from the Social Cognitive Theory (SCT). The PE construct is the strongest predictor of intention (Venkatesh et al., 2003) which was confirmed by Madigan et al. (2016) when investigating acceptance of SAVs, or Automated Road Transport Systems (ARTS) as was referred to in their paper.

Effort Expectancy (EE) - the degree of ease associated with the use of a system. The constructs used to build EE are (1) perceived ease of use from TAM and (2) ease of use from the IDT.

Social Influence (SI) - the degree to which an individual believes that the opinion of people who are important to the individual will influence their decision to use a new system. The constructs used to build SI are (1) subjective norm from the Theory of Reasoned Action (TRA) and (2) social factors from the Model of PC Utilisation (MPCU).

Facilitating Conditions (FC) - the degree to which an individual believes that infrastructure exists to support in the use of the system. Examples can include a help menu, an assistant, etc. The constructs used to build FC are (1) perceived behavioural control from the Theory of Planned Behaviour (TPB) and (2) facilitating conditions from the MPCU. UTAUT was later developed further by Venkatesh.

To develop UTAUT further, Venkatesh et al. (2012) added three more constructs to UTAUT to create the Extended Unified Theory of Acceptance and Use of Technology, or UTAUT2 in short (See Figure 3). The three new constructs were hedonic motivation, price

value and habit. While these models are often used without modification, researchers can add new constructs to make them more relevant to the specific applied context (Chang, 2012; Tamilmani et al., 2017).

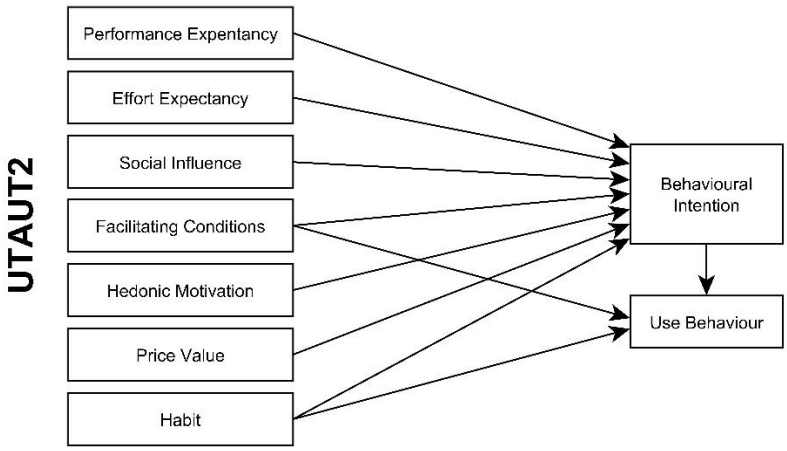

Figure 3: Extended Unified Theory of Acceptance and Use of Technology (Venkatesh et al., 2012)

2.5.1.3. Instrumental vs. Affective Dimensions in Technology Acceptance

A deeper critical consideration within these established acceptance frameworks, particularly relevant when informing methodological choices, concerns the nature and measurement of 'attitude' towards technology use. While foundational models like TAM initially conceptualised attitude somewhat broadly as a mediator, subsequent research and models like UTAUT/UTAUT2 implicitly or explicitly recognise the value in dissecting user predispositions more finely. A crucial distinction lies between instrumental (or cognitive) beliefs and affective responses (Bagozzi et al., 1999; van der Laan et al., 1997). Instrumental attitudes relate to the perceived usefulness and effectiveness of a technology in achieving practical goals, central to constructs like 'Perceived Usefulness' (TAM) and 'Performance Expectancy' (UTAUT/UTAUT2). Affective attitudes, conversely, capture the feelings, emotions (e.g., pleasure, anxiety, excitement), and overall hedonic value associated with using the technology, partially addressed by UTAUT2's 'Hedonic

Motivation' but also intertwined with aspects of trust and perceived risk, especially for technologies like AVs/SAVs.

The methodological decision of whether to measure these attitudinal facets separately or attempt to capture them within a single, unified 'attitude' construct carries significant implications. Treating them distinctly, as favoured by frameworks separating cognitive (PE) and hedonic (HM) drivers, offers a more nuanced understanding. It allows researchers to identify potentially conflicting user views; for instance, a technology perceived as highly useful but also anxiety-provoking or unenjoyable, providing valuable diagnostic information for design and implementation strategies (Brown and Venkatesh, 2005). However, this approach increases model complexity and questionnaire length. Conversely, attempting to combine them into a single attitude measure risks oversimplification, potentially masking critical underlying factors that drive acceptance or rejection, especially for complex socio-technical systems like SAVs where emotional responses (e.g., related to safety, trust, loss of control) are arguably as important as functional evaluations (Hohenberger et al., 2016; Nordhoff et al., 2018). Furthermore, the specific context dictates the relative importance; for utilitarian systems, instrumental attitudes might dominate, whereas for hedonic systems or those with significant perceived risks (like SAVs), affective dimensions gain prominence (Khalifa and Shen, 2008).

Considering the specific context of high-speed SAVs, this theoretical distinction strongly informs the methodological approach adopted in this thesis. SAVs represent a technology where both pragmatic utility (e.g., travel efficiency, cost-effectiveness – related to PE, PV) and deeply affective responses (e.g., trust in the automation, feelings of safety alongside strangers, potential enjoyment or anxiety – related to TR, HM, and

elements of SQ) are clearly anticipated to be critical drivers of acceptance. Therefore, relying on a model that only captures a single 'attitude' construct would likely be insufficient. The selection of UTAUT2 as a base, which already separates PE and HM, and the decision to further extend it with constructs like Trust (TR) and Service Quality (SQ), both containing significant affective and cognitive elements specific to the SAV experience, is therefore theoretically justified. This multifaceted approach, while more complex, is deemed necessary to adequately capture the key instrumental and affective drivers influencing user intentions towards adopting this novel form of shared mobility, thereby providing a more robust foundation for the empirical investigations in Chapters 3 and 4.

2.5.2. Use Behaviour vs Intention to Use

According to Venkatesh et al. (2003), use behaviour, refers to the way individuals interact with, utilise, and engage with a technology or system in their daily lives or work processes. It encompasses the patterns, frequency, and intensity of technology usage, as well as the user's ability to adapt to and integrate the technology into their routines. Understanding use behaviour is crucial for evaluating the success of technology adoption and determining the factors that facilitate or hinder its effective usage. This is, however, different from intention to use.

Intention to use, or behavioural intention, refers to an individual's likelihood or predisposition to adopt and utilise a technology or system in the future (Venkatesh et al., 2003; Venkatesh et al., 2012). It reflects a user's mindset or commitment to engage with the technology based on their perceptions, attitudes, and beliefs about its usefulness, ease of use, and potential benefits. In the context of technology acceptance models, intention to use is often considered an precursor to actual use behaviour, as individuals with a

stronger intention to use a technology are more likely to adopt and integrate it into their daily lives or work processes. Intention to use can translate into use behaviour.

Intention to use can translate to use behaviour through the process of individuals acting upon their predisposition to adopt and utilise a technology or system. A stronger intention to use a technology typically results in a higher likelihood of actual adoption and integration of the technology into an individual's daily life or work processes. Intention to use serves as a bridge between an individual's perceptions, attitudes, and beliefs about a technology and their actual engagement with it.

Technology acceptance models often measure intention to use or behavioural intention when the technology is not yet on the market, as is the case with SAVs. However, it is important to note that intention to use can change over time as individuals gather new information, gain experience, or encounter changes in their personal or contextual circumstances.

2.5.3. Existing Acceptance Models for SAVs

Osswald et al. (2012) reasoned that UTAUT, because of its roots in information technology, was lacking important factors for understanding vehicle acceptance. They proposed the Car Technology Acceptance Model (CTAM), which introduced four additional factors to UTAUT; (1) perceived safety, (2) attitude toward the use of technology, (3) anxiety, and (4) self-efficacy (See Figure 4). Perceived safety - the degree to which an individual believes that using a system will affect his or her well-being. When Osswald et al. (2012) proposed perceived safety as a factor, it was partly (29%) based on concerns about distraction from traffic by using onboard Human-Machine Interface

(HMI). Since distraction is not a concern for SAVs, this indicator can be dropped in this project. However, perceived safety as a factor is still important.

Attitude towards the use of technology - Within the specific context of the CTAM model, this factor emphasises the individual's overall affective reaction towards using the system. Given that the base UTAUT model already includes cognitive evaluations (Performance Expectancy, Effort Expectancy), this CTAM addition serves to capture the crucial feeling-based dimension, complementing the instrumental assessments (Osswald et al., 2012). While it may implicitly reflect user beliefs, its primary function within this extended model appears focused on affect.

Anxiety - anxiety in the car context as the degree to which a person responds to a situation with apprehension, uneasiness or feelings of arousal.

Self-efficacy - a person's belief in his/her ability and competence to use a technology (e.g. a radio) to accomplish a particular task.

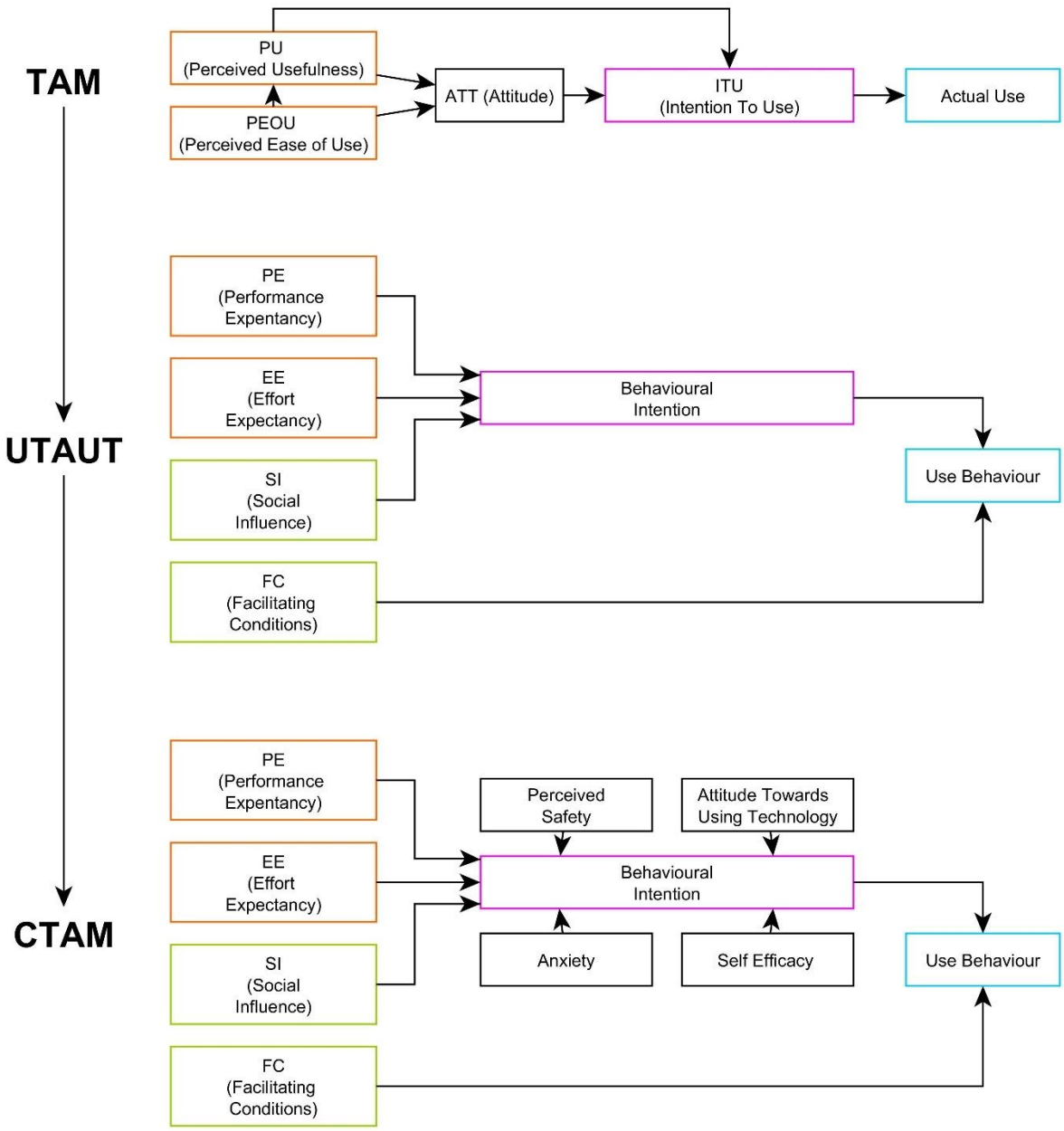

Figure 4: The evolution of the acceptance models from TAM to CTAM

2.5.4. Acceptance of Shared Vehicles

Some researchers have investigated factors specifically affecting acceptance of shared manually driven (i.e., non-automated) vehicles. Kooti et al. (2017) looked at factors that affect user participation in shared vehicles such as Uber. An interesting and important finding is that passengers prefer a smaller age difference between themselves and the driver, as indicated by a higher rating. This suggests that passengers more easily

relate to and can connect with drivers within their age group. Uber's ride matching service does not allow passengers to indicate a preference for drivers but excludes previously encountered drivers who received a very low rating from the passenger making the request (Uber, 2018). Yakovlev and Otto (2018) identified barriers and benefits to car-sharing and ride-sharing through a survey involving 105,000 car owners and 10,000 non-car owners across nine countries (See Table 5). Table 1: Top three barriers and benefits of car-sharing and ride-sharing (Yakovlev and Otto, 2018)

Table 5: Top three barriers and benefits of car-sharing and ride-sharing (Yakovlev and Otto, 2018)

	Barriers	Benefits
Car-sharing	• Don`t know enough about Car-Sharing services (40%) • Concern over the availability of vehicles / walk a long distance to the closest vehicle (36%) • High rates per hour of use (34%)	• No car ownership costs (maintenance/ repair, insurance, tax, etc.) (57%) • Do not have to purchase a vehicle (48%) • The convenience of not having to take care of vehicle (43%)
Ride-sharing	• The uncertainty of the rates (rates can change at any time depending on demand or "primetime" pricing) (36%) • Security - I do not trust ride-sharing drivers (36%) • Don`t know enough about ride-sharing services (35%)	• Cheaper than a traditional taxi (49%) • Simple ordering via-app (48%) • Short waiting time (41%)

2.5.5. Acceptance of Shared Automated Vehicles

A study by Zmud and Sener (2017) sampling 556 Austin residents, found that, given a choice between only AV and SAV, most respondents (70%) preferred owning a self-driving car instead of sharing one in a service similar to that of Car2Go or Uber. Piao et al. (2016) found a similar result. Consequently, they emphasised a reluctance to change to any form of a shared mobility solution. A similar conclusion was reached by Haboucha et al. (2017), who found that cost is an important variable in the choice to use SAVs.

However, up to 25% of respondents rejected SAVs even if they were completely free to use. This peculiar result reveals some underlying phenomena that are not yet fully understood with regards to user acceptance of SAVs. Loss aversion might well imply that car users will see the loss of their personal car, door-to-door travel and personal autonomy twice as clearly than the benefits of SAVs (Watkins, 2018).

2.5.6. Limitations of Technology Acceptance Research in Vehicle Automation

As explained under 2.5.1. UTAUT combined the eight most significant models of individual acceptance, making it quite a robust technology acceptance model, as it eliminated redundancy and repetition. However, when it comes to acceptance of vehicle automation, particularly shared vehicle automation, prototypes are either not available to the public or still in early stages of development (Nordhoff et al., 2018). As such it is not possible to measure actual use behaviour, but only the intention to use.

When applying these theories to the study of SAVs, it is important to recognise that no single model fully captures the range of factors influencing user acceptance. Instead, a multi-theory approach may be more effective in explaining the complexities of SAV adoption. For instance, the rational components of TPB and UTAUT can be combined with the emotional insights from IRT and trust-based models to create a more comprehensive framework for understanding how users perceive and adopt SAVs.

Additionally, SAV acceptance is likely to evolve over time as users become more familiar with the technology. Early adopters may rely on rational evaluations of safety and performance, while later adopters may be more influenced by social norms or emotional responses. This dynamic nature of acceptance underscores the importance of ongoing research and adaptive strategies for promoting SAV adoption.

2.6. Virtual Reality as a Research Methodology for SAV Acceptance

Investigating user acceptance of future technologies like SAVs presents unique methodological challenges, as direct real-world experience is often limited or non-existent. VR emerges as a valuable research methodology in this context, offering the potential to simulate complex SAV scenarios and interactions within controlled environments. This section explores the application and relevance of VR for studying SAV acceptance, delving into key concepts, prior uses, and measurement considerations essential for leveraging this technology effectively.

2.6.1. Prior Applications of VR in Automated Vehicle Research

The use of VR is not entirely novel within the broader field of automated vehicle research. Examining previous applications helps establish its utility and provides context for its specific use in understanding passenger acceptance of SAVs. The following subsections review how VR has been employed to study critical aspects such as human-vehicle interactions and its role in training and education related to automated driving systems.

2.6.1.1. Using VR to study human-vehicle interactions

As the role of the human driver evolves with the advent of AVs, understanding human-vehicle interaction is crucial to ensure safety and user acceptance (Rosenholtz et al., 2006). VR provides an immersive platform for simulating human-vehicle interactions in a controlled environment (NHTSA, 2020). For example, Lee et al. (2020) investigated the impact of driver distraction on the performance of a partially automated vehicle using a VR driving simulator. They found that drivers were more likely to be involved in collisions when they were engaged in non-driving tasks, highlighting the importance of maintaining situational awareness even in a partially automated vehicle. Naujoks et al.

(2016) explored the effects of using in-vehicle infotainment systems on driver behaviour in the context of Level 3 automated driving. Their VR-based study revealed that drivers who used infotainment systems had slower reaction times to take over control from the AV when necessary, emphasising the need for effective driver monitoring systems.

While these examples illustrate VR's value in driver-focused AV research, extending its application to passenger-centric SAV studies, especially concerning segmented shared spaces, requires careful validation of the VR methodology itself. A crucial aspect is understanding the factors that influence presence, the subjective feeling of 'being there,' within VR simulations of SAV environments. This sense of presence is fundamental to ensuring that participant responses in VR are valid and generalisable to real-world SAV scenarios.

2.6.1.2. Training and Education

VR-based training and education can help familiarise users with the operation and potential limitations of AVs, enhancing safety and user acceptance (Gold et al., 2015). Moreover, VR can be used to train researchers and engineers in AV development, improving their understanding of complex systems (Wang et al., 2016). Wang et al. (2016) explored the effectiveness of a VR-based training system for automotive engineers working on AV development. The participants reported improved understanding of the vehicle dynamics and system limitations, demonstrating the potential of VR as a training tool in AV development. Gold et al. (2015) used VR to train drivers on how to interact with Level 3 automated vehicles. The study found that participants who received VR-based training had better understanding of the vehicle's capabilities and limitations, as well as improved trust in the automated system, compared to a control group that received traditional training methods.

These diverse applications highlight VR's potential, yet underscore the need to validate its methodological rigor, especially when investigating nuanced aspects of passenger experience like presence in novel SAV interiors.

2.6.2. Key Concepts in Virtual Reality Environments

To effectively evaluate and utilise VR as a research tool, particularly for assessing nuanced aspects like user acceptance and experience in SAVs, it is crucial to understand the foundational concepts that define the quality and characteristics of the virtual environment itself. Concepts such as visual and psychological fidelity, along with the level of immersion, significantly shape the user's perception and interaction within the simulation. This subsection will define and discuss these key technical and experiential concepts.

2.6.2.1. Visual and Psychological Fidelity in Virtual Reality

Both visual and psychological fidelity play essential roles in the effectiveness of VR experiences. Ensuring high visual fidelity requires careful attention to graphical realism, lighting, texture quality, frame rate, and latency, as well as the accurate representation of scale. On the other hand, achieving high psychological fidelity involves creating realistic and complex environments, allowing for user interaction and control, and providing appropriate auditory and haptic feedback.

Researchers and developers must consider both aspects of fidelity when designing VR systems and applications to create immersive, believable experiences that can yield valid research findings or effectively train and prepare users for real-world situations. For VR to be an effective research tool for studying segmented shared spaces in SAVs, high visual and psychological fidelity are crucial. These aspects ensure that the virtual

environment is perceived as sufficiently realistic and believable by participants, allowing for the elicitation of authentic responses relevant to real-world SAV scenarios.

2.6.2.2. Visual Fidelity

Visual fidelity is a critical aspect of VR systems, as it defines the quality and similarity with which virtual objects or environments are reproduced compared to their real-world counterparts (Watson et al., 2001). High visual fidelity is essential for creating immersive and believable VR experiences, as it ensures that users perceive the virtual environment as an accurate representation of the real world.

Several factors contribute to visual fidelity in VR, including graphical realism, lighting, and texture quality (Bowman et al., 2012). Graphical realism refers to the level of detail and complexity in the virtual environment's geometry and objects, while lighting and texture quality impact how objects appear and interact with their surroundings. Additionally, the frame rate and latency of the VR system can influence the perception of visual fidelity, as smooth and responsive visuals can contribute to a more realistic and immersive experience (Cummings and Bailenson, 2016).

An example of the importance of visual fidelity in VR is the accurate representation of scale. When objects in the virtual environment do not maintain the correct real-world scale, users may find it difficult to interact with them, leading to a less immersive and less believable experience (Steed et al., 2016). Furthermore, a mismatch in scale can lead to spatial disorientation and potentially cause simulator sickness (Kolasinski, 1995). In the context of using VR to study SAVs, high visual fidelity is paramount for creating research environments that accurately represent the spatial characteristics of segmented shared spaces. Accurate scale, detailed visuals, and smooth rendering are necessary to ensure

participants perceive the virtual space as a plausible representation of a real vehicle cabin.

2.6.2.3. Psychological Fidelity

While visual fidelity focuses on the appearance of the virtual environment, psychological fidelity is concerned with the extent to which stimulus presentation evokes the same physiological or emotional response one would experience in real life (Wilson and Soranzo, 2015). Psychological fidelity is crucial for the success of VR applications, as it ensures that users respond to virtual stimuli as they would in real-life situations.

In the context of VR research, high psychological fidelity can lead to more valid and reliable results. For instance, VR-based training scenarios should elicit similar stress responses as real-world situations to effectively prepare individuals for real-life challenges (Rizzo et al., 2011). Similarly, in the study of human behaviour in VR, researchers must ensure that the virtual environment's psychological fidelity is sufficiently high to generalise their findings to real-world contexts (Bailenson et al., 2008).

Factors that contribute to psychological fidelity include the complexity and realism of the virtual environment, the degree of user interaction and control, and the presence of auditory and haptic feedback (Slater and Wilbur, 1997). Additionally, the degree of presence, or the subjective experience of "being there," in the virtual environment can influence psychological fidelity, as it is closely linked to the user's emotional and physiological responses (Witmer and Singer, 1998). For research on SAVs, psychological fidelity means creating virtual scenarios that evoke realistic user behaviours and responses relevant to shared mobility contexts. This includes simulating

realistic interactions within segmented spaces and ensuring that participants respond to virtual stimuli as they would in a real SAV.

2.6.2.4. Immersion and its Impact on Virtual Reality Experiences

Immersion is a critical factor in the effectiveness of VR systems, as it influences the user's sense of presence and overall experience. Although the terms "immersion" and "presence" are often used interchangeably in the literature (Grinberg et al., 2014), they are distinct concepts. Slater (2003) defines immersion as the degree to which a VR system's displays and tracking maintain fidelity concerning their real-world sensory modalities. In contrast, presence refers to the subjective experience of "being there" within the virtual environment (Witmer and Singer, 1998). Immersion is an objective characteristic of a VR system that contributes to creating a state of presence. In the context of research using VR to study SAVs, immersion is about the technical capabilities of the VR system to deliver a convincing simulation. While highly immersive systems might be ideal, this research investigates the effectiveness of using less immersive, but more accessible passive monoscopic VR, to determine if it provides sufficient immersion for valid research on segmented shared spaces in SAVs.

2.6.2.5. Factors Affecting Immersion

Several display attributes and system characteristics impact immersion in VR environments, including frame rate, resolution, field of view (FoV), stereoscopy, and the ability to look around (Alshaer et al., 2017).

<u>Frame rate</u>: The smoothness and responsiveness of the visuals in a VR system depend on the frame rate, which is the number of frames displayed per second. Higher

frame rates typically result in more fluid and realistic animations, enhancing the sense of immersion (Cummings and Bailenson, 2016).

Resolution: The clarity and detail of the virtual environment's visuals are determined by the resolution of the display. Higher resolutions offer more precise and intricate visuals, increasing the sense of immersion (Bailenson et al., 2008).

Field of view (FoV): FoV refers to the extent of the observable virtual environment that is visible at any given moment. A broader FoV allows users to see more of the virtual environment without turning their heads, contributing to a more immersive experience (Lombard and Ditton, 1997).

Stereoscopy: Stereoscopy enables the perception of depth in the virtual environment by presenting slightly different images to each eye, mimicking the way humans perceive depth in the real world. The use of stereoscopic displays can enhance the sense of immersion by creating a more realistic, three-dimensional virtual environment (Krijn et al., 2004).

The ability to look around: The degree to which users can freely explore and interact with the virtual environment also impacts immersion. Systems that allow users to look around and interact with their surroundings in a natural and intuitive manner contribute to a more immersive experience (Slater et al., 1996).

Crucially, many of these factors, particularly resolution and field of view, are influenced by the display screen characteristics. This study focuses on screen size as a key display attribute and investigates its impact on immersion and ultimately the validity of passive monoscopic VR as a research tool for SAV studies.

2.6.2.6. The Role of Immersion in Virtual Reality Research and Applications

Immersion plays a crucial role in the effectiveness of VR systems for research and practical applications. High levels of immersion can lead to more engaging and believable VR experiences, which are essential for various purposes, such as training, therapy, and entertainment (Riva et al., 2007).

In the context of research, immersive VR environments can provide more ecologically valid settings for studying human behaviour and cognition, as they closely resemble real-world situations (Blascovich et al., 2002; Bailenson et al., 2008). Additionally, high immersion levels can improve the effectiveness of VR-based training and therapy by eliciting similar emotional and physiological responses to real-world scenarios (Rizzo et al., 2011).

Immersion is a critical factor in the effectiveness of VR systems, as it influences the user's sense of presence and overall experience. Ensuring high levels of immersion requires careful attention to display attributes and system characteristics, such as frame rate, resolution, FoV, stereoscopy, and the ability to look around. By achieving a high level of immersion, researchers and developers can create more engaging and believable VR experiences for various purposes, including research, training, therapy, and entertainment.

For research on SAVs, higher immersion in the VR simulation is expected to lead to more ecologically valid findings about user behaviour and perception within segmented shared spaces. However, it's important to determine if sufficient immersion can be achieved with less technologically demanding approaches like passive monoscopic VR, and if screen size plays a significant role in reaching that sufficient level.

2.6.3. The Significance of Presence in Virtual Reality Experiences

Presence is a central concept in the field of VR, referring to the extent to which users feel as though they are "really there" within a virtual environment (Witmer and Singer, 1998). This phenomenon is a critical component of effective VR experiences, as it helps users respond to experimental stimuli in a manner similar to real-world situations (Draper et al., 1999; Slater et al., 2009; Kober et al., 2012). Understanding presence and its contributing factors is crucial for the development of immersive and impactful VR applications in various domains, including research, education, training, and therapy.

In the context of using VR as a research tool for SAVs, presence is not just about user enjoyment, but fundamentally about the validity of the research method. A higher sense of presence suggests that participants are responding to the virtual SAV environment as if it were real, increasing the confidence in generalising research findings to real-world SAV scenarios.

2.6.3.1. Components of Presence

As already mentioned, a stronger sense of presence indicates that participants are reacting to the virtual SAV environment as if it were real, bolstering confidence in generalising research findings to real-world SAV contexts. Witmer and Singer (1998) proposed a framework for presence as a normal awareness phenomenon that depends on three primary factors: (1) multisensory stimulation, (2) environmental factors within VR, and (3) individual tendencies to become involved.

<u>Multisensory stimulation</u>: The sensory input provided by a VR system, including visual, auditory, and tactile cues, is a key component of presence. The more consistent

and integrated these cues are, the more likely users are to feel present in the virtual environment (Lombard and Ditton, 1997; Makransky et al., 2017).

Environmental factors: The design of the virtual environment plays a crucial role in encouraging involvement and enabling immersion. Elements such as interactivity, realism, and consistency contribute to a sense of presence by allowing users to engage with the environment in a natural and intuitive manner (Held and Durlach, 1992; Schuemie et al., 2001).

Individual tendencies: Users' personal inclinations to become involved in the virtual environment can also impact presence. Factors such as motivation, attention, and susceptibility to immersion influence the degree to which individuals feel present within a virtual environment (Slater et al., 2003; Skarbez et al., 2017).

When using VR for SAV research, careful consideration of these components is essential to maximise presence and thus the validity of the research tool. Multisensory stimulation in this context would involve realistic visual and auditory cues representing the SAV interior. Environmental factors relate to the design of the virtual segmented spaces to be intuitive and representative of potential real-world designs. Individual tendencies highlight the need to consider participant characteristics that might influence their sense of presence in the virtual SAV environment.

2.6.3.2. The Influence of Immersion and Visual Fidelity on Presence

As Figure 5 illustrates, both immersion and visual fidelity are significant determinants of presence in virtual environments. Immersion, as previously discussed, refers to the objective characteristics of a VR system that maintain fidelity with real-world sensory modalities. A higher level of immersion contributes to an increased sense

of presence by enhancing the user's ability to engage with the virtual environment (Slater, M. et al., 2009)

Visual fidelity, on the other hand, relates to the quality and similarity of virtual objects or environments compared to their real-world counterparts (Watson et al., 2001). Improving visual fidelity enhances the believability of the virtual environment, which in turn, contributes to a heightened sense of presence (Wilson and Soranzo, 2015).

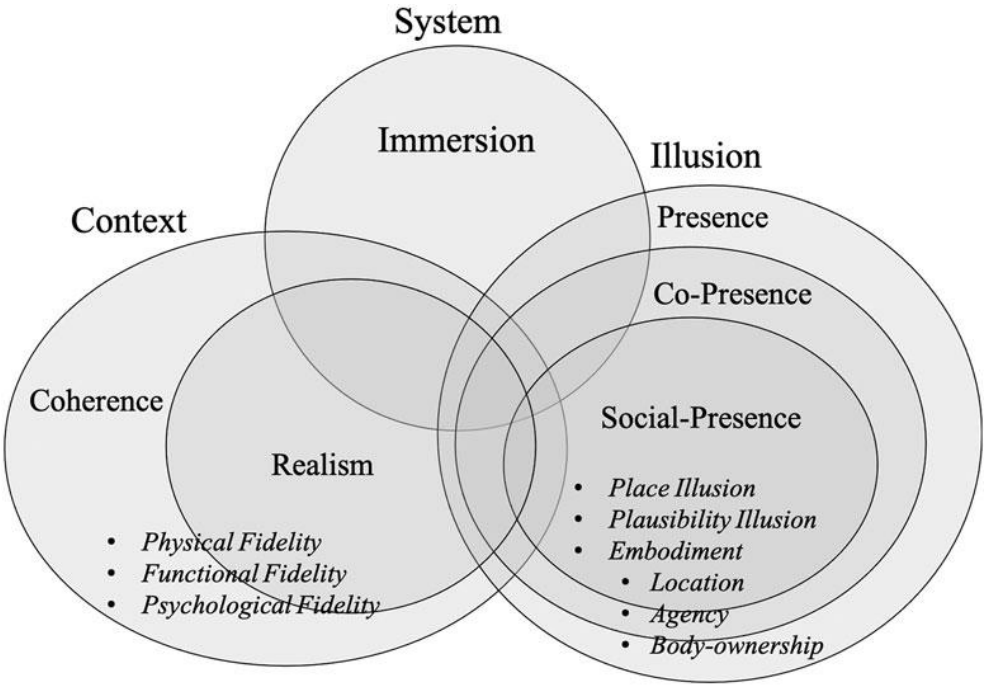

Figure 5: Venn diagram model for quality of VR experience (Jung and Lindeman, 2021)

2.6.3.3. Implications for VR Applications

The concept of presence is vital for the effectiveness of VR systems in various domains, as it influences user engagement, learning outcomes, and overall satisfaction with the experience (Ragan et al., 2010). By enhancing presence, developers can create more impactful VR applications for research, training, therapy, and entertainment. In research settings, a high level of presence can lead to more ecologically valid studies, as participants are more likely to respond to experimental stimuli as they would in real life

(Blascovich et al., 2002). In training and therapy contexts, increased presence can improve the effectiveness of interventions by eliciting similar emotional and physiological responses to real-world situations (Rizzo et al., 2011).

Presence is a critical element in the success of VR experiences, as it influences user engagement, learning outcomes, and overall satisfaction. By understanding the components of presence and the influence of immersion and visual fidelity, developers and researchers can design more effective VR applications for various purposes, including research, education, training, and therapy. In the future, as technology continues to advance, it is expected that VR systems will become increasingly immersive, providing even more realistic and engaging experiences. This evolution will further enhance the sense of presence in virtual environments, leading to more impactful applications across a wide range of fields, including using VR to study SAVs

2.6.3.4. Implications of Presence for Different User Populations

The impact of presence in VR experiences can vary depending on the target user population, as different individuals may have unique responses to virtual environments based on factors such as age, prior experience, and cultural background. For example, older adults may have more difficulty adjusting to virtual environments and may experience a reduced sense of presence compared to younger individuals (Bohil et al., 2011). On the other hand, younger users who have grown up with digital technology may be more adept at navigating virtual environments and may experience a higher sense of presence (Bracken, 2005).

Cultural factors can also impact presence, as users from different backgrounds may have varying expectations and preferences for virtual environments. Researchers

should consider cultural aspects when designing VR experiences to ensure that users from diverse backgrounds can effectively engage with and benefit from the technology (Ratan et al., 2019).

Additionally, users with disabilities may require specialised adaptations in virtual environments to experience a sense of presence. By incorporating accessible design features and customised interfaces, developers can create more inclusive VR experiences for users with a wide range of abilities (Cobb et al., 1999). For VR research on SAVs, it is important to acknowledge that presence responses may vary across participant demographics. Researchers should consider potential age, experience, or cultural biases in presence when interpreting results and generalizing findings from VR studies to diverse real-world SAV user populations.

Presence is a multifaceted concept that is influenced by numerous factors, including immersion, visual fidelity, and individual differences among users. By understanding these factors and considering the unique needs and preferences of different user populations, developers can create more engaging, impactful, and inclusive VR experiences for research, education, training, and therapy applications. Similarly, for VR research on SAVs, a careful consideration of user population characteristics is essential to ensure the robustness and generalisability of findings obtained using VR methodology

2.6.4. Measuring Presence: The Igroup Presence Questionnaire (IPQ)

As highlighted in the preceding discussion (Section 2.6.3.), the subjective feeling of "presence" is a critical factor determining the effectiveness and validity of VR experiences, especially in research contexts. Accurately quantifying this sense of 'being

there' is therefore essential. While various methods exist, the Igroup Presence Questionnaire (IPQ) stands out as a widely adopted and validated instrument specifically designed for this purpose. This section introduces the IPQ, outlining its structure and relevance for measuring presence in studies like this one.

2.6.4.1. The use of IPQ Presence Questionnaire to measure presence in virtual reality research

The IPQ (Igroup Presence Questionnaire) is a widely used tool to measure presence in VR research. Developed by Schubert et al. (2001), the IPQ is designed to assess the subjective sense of presence experienced by users in virtual environments. The IPQ consists of 14 items rated on a 7-point Likert scale, ranging from -3 (strongly disagree) to +3 (strongly agree). The questionnaire is divided into three subscales: Spatial Presence, Involvement, and Realism.

Spatial Presence: This subscale measures the extent to which participants feel physically present in the virtual environment. It assesses their perception of the virtual space and their sense of being located within it (Schubert et al., 2001).

Involvement: Involvement refers to the participant's psychological engagement with the virtual environment. This subscale measures the extent to which users are absorbed in the experience, focusing their attention on the virtual world and ignoring the real world (Schubert et al., 2001).

Realism: The realism subscale evaluates the perceived authenticity and believability of the virtual environment. It assesses the extent to which users consider the virtual environment to be similar to the real world in terms of appearance, behaviour, and overall experience (Schubert et al., 2001).

In VR research, the IPQ can be used to assess the effectiveness of different virtual environments, interventions, or system configurations by comparing presence scores across conditions. It can also be used to examine the relationship between presence and other variables, such as performance, learning, or user satisfaction (Makransky et al., 2017). By evaluating presence using the IPQ, researchers can gain valuable insights into how well a virtual environment simulates the real world and how engaging it is for users.

For this study, the IPQ is employed as the primary instrument to measure presence and thus evaluate the effectiveness of passive monoscopic VR as a research methodology for studying segmented shared spaces in SAVs. The IPQ allows for quantifying the subjective sense of "being there" and assessing whether different screen sizes impact the validity of the VR simulation.

2.6.4.2. Examples of the IPQ Presence Questionnaire being used to measure presence when using passive monoscopic VR environments

Although passive monoscopic VR environments are not as immersive as their stereoscopic or active counterparts, the IPQ (Igroup Presence Questionnaire) has been employed in various studies to measure presence in such settings. For example, in a study by Skalski and Whitbred (2010) on video games, the researchers investigated the role of presence in predicting enjoyment in passive monoscopic video game experiences. They used the IPQ to measure presence, examining how the level of presence experienced by the participants influenced their enjoyment of the games. The results indicated that participants who reported higher levels of presence also experienced greater enjoyment.

Another study by (Paes et al., 2017), the authors explored the effectiveness of different display technologies in architectural visualisation, including passive monoscopic VR environments. The IPQ was also used to measure the presence

experienced by the participants across different display conditions. The study found that even in passive monoscopic conditions, the sense of presence could be influenced by factors such as the quality of the visualisation and the level of interaction with the virtual environment.

These examples demonstrate that the IPQ is a suitable tool for measuring presence even in less immersive VR conditions. This supports its use in the current study to assess the level of presence achieved in passive monoscopic VR simulations of SAV spaces and to compare presence across different screen sizes, thereby evaluating the impact of screen size on the validity of this VR research methodology.

2.7. Conclusion

This chapter set out to examine the key ideas, underlying theories, and research findings related to the adoption of SAVs. Rather than focusing on a single field, the material covered a variety of areas: vehicle automation, shared mobility, the patterns and motivations behind private vehicle ownership, and established models that describe how people come to accept new technologies. Each of these topics helps us better understand how SAVs might alter urban transport and what influences the willingness of individuals to use them.

In short, this review synthesises distinct but converging fields to reveal several critical research gaps. It establishes that while the technology for Level 4 automation is advancing, these innovations directly confront the deeply embedded cultural and practical norms of private car ownership. Existing technology acceptance models, such as TAM and UTAUT, provide a strong foundation for understanding the rational drivers of

adoption but appear insufficient to capture the complex, often affective, factors governing the transition to SAVs. Specifically, the literature highlights a need for a deeper investigation into the more nuanced dimensions of acceptance. Key among these are the emotional responses to sharing a driverless space, the pivotal role of trust (in both the technology and co-passengers), and concerns over privacy and security. These elements, which are not core to standard acceptance models, emerge as primary barriers that require thorough investigation before the potential of SAVs can be realised.

This thesis aims to tackle some of these issues by examining what encourages or hinders people from embracing high-speed, level 4 SAVs in shared environments. Drawing on technology acceptance models as well as direct studies of shared and autonomous transport, it will produce a richer understanding of how SAVs might find their footing in urban settings. The findings will add to academic debates in this field and offer practical guidance for developing and promoting shared automated transport services.

Chapter 3

Study 1: Factors that influence the acceptance of future shared automated vehicles – a focus group study with United Kingdom drivers

Chapter 3 Study 1: Factors that influence the acceptance of future shared automated vehicles – a focus group study with United Kingdom drivers

3.1. Introduction

This study aimed to identify factors that can influence user acceptance of SAE Level 4 high-speed SAVs by identifying driver attitudes, perceptions and preferences for using private vehicles, current car-share and ride-share modes, as well as future shared automated modes of transport. This was done through an online asynchronous focus group. The focus group was asynchronous as it allowed participants to take part at different times; i.e. without the need for them being online at the same time. The purpose of the focus group was not to infer, generalise, nor make statements about the broader population. It's purpose was to understand, determine a range of issues and provide insights about how people in a group perceive a product or service. As such, meaning units were extracted from participant responses and aggregated to understand values they consider to be important in their choice of transportation, and values they deem important for future SAVs.

This study focuses on private car owners and drivers, to understand their attitudes and preferences for high-speed SAVs. Previous studies have found that this subset of users are the least likely to use SAVs (Madigan et al., 2017; Winter et al., 2020; Zhou et al., 2020) and have previously not been the focus of acceptance studies for high-speed SAVs. It is important to get private car owners to leave their cars in favour of SAVs. For this to happen, SAVs need to be tailored to the needs and preferences of these users; meeting not just mobility needs, but also affective needs (Redman et al., 2013). Lastly, this study proposes a conceptual acceptance model that expands on UTAUT2 with a few

extended model predictors for future research; for assessing user intentions to use future high-speed SAVs.

3.2. Study Aims

This study aims to investigate attitudes and user requirements, from the perspective of car users, for the adoption of shared automated vehicles; in which the user can shift from individual car ownership to taxi services (e.g. Google's Waymo, Uber). More specifically, the objectives for this study are as follows:

- To determine which factors predict user acceptance of SAVs.
- To establish to what extent UTAUT2 can, in its current form, accommodate these factors.
- If UTAUT2 is missing important factors, propose a draft version of a SAV Technology Acceptance Model, as an extension of UTAUT2, to support further research on SAV acceptance.

The next sections of this chapter present the research method, results, discussion, limitations and conclusions. The method section details the type of focus group used in this study, sample questions and how the data was analysed. The results section primarily focuses on the three main categories and the subcategories under each. A number of direct quotes from participants are also included in this section to give a sense of the type of responses generated during the focus group. In the discussion, the implications of these categories is discussed, and a conceptual extended acceptance model is proposed for SAVs.

3.3. Methods

An online asynchronous focus group (Sweet, 2001) study was carried out, which ran for five days (May 23 – 30, 2019), using the tool www.focusgroupit.com. An online focus group is the online equivalent of a face-to-face focus group that invites participants to a virtual setting with the ability of the researcher to moderate discussions (Mesari, 2016). Online asynchronous focus groups allow participants to read and respond to each other's responses at their convenience through the use of online discussion forums (Williams et al., 2012). The asynchronous nature of the study allowed participants to consider their responses more carefully than real-time sessions, or even do online searches or similar to guide their responses.

Focus groups have commonly been used as alternatives to in-depth interviews (Bloor et al., 2001) while allowing participants to interact in a discussion. They can be used to understand key user requirements by learning from current and potential users of a product or service (Bader and Rossi, 2002). One advantage of online asynchronous focus groups is that they "need not be time-limited in the same way as face-to-face focus groups, allowing much more extensive discussions to develop" (Bloor et al., 2001, p.81). Since participants give written responses, there was no need for transcription of any audio.

Online asynchronous focus groups typically require more participants than face-to-face focus groups. A face-to-face focus group is a discussion around a given topic by 6-12 participants (Bloor et al., 2001). This small number promotes participation by each member in the discussion (Bader and Rossi, 2002). However, in online focus groups, larger numbers of participants promote greater cross discussion and interaction; a

recommendation first made by Murray (1997), who used 6-8 participant. In a review of 21 asynchronous studies, Williams (2009) found a mean number of 12 participants per group; ranging from 3 to 57. As Bloor et al. point out, online focus groups can also be much larger than traditional face-to-face focus groups as the size of the group does not interfere with participants' ability or willingness to contribute. A slightly larger number is usually required to account for inactive participants or drop-out participants.

3.3.1. Participant recruitment

Twenty-five participants who met the study requirements were recruited primarily through the University of Leeds Institute for Transport Studies Driving Simulator database of study volunteers, through social media (specifically the 'Leedsface' Facebook group, with permission from the group's administrator), and finally through a study participant recruitment website; callforparticipants.com. Study volunteers were directed to an online form to assess their eligibility to take part in the focus group. The target participants had to meet the following criteria (for clarity, also see Table 7):

- non-experts in the research topic
- own and/or use a car every week
- must have used ridesharing or carsharing services such as Uber at least once in the 12 months before the study
- must have daily access to a computer or tablet with internet to participate online

To secure the recruitment process from duplicate participants several security measures were implemented during recruitment. A cookie was set to prevent repeat participation in the recruitment filter, and only one volunteer could be approved per IP address. A

unique token ID was assigned to each volunteer who met the criteria, to limit access to the registration page (detailed description, consent form, focusgroupit.com). On focusgroupit.com, new self-registered accounts were manually approved, by comparing the registered user's information against the completed consent forms.

Volunteers who met the criteria were invited to register as participants for the focus group. They were directed to a participant information sheet with a more detailed description of their expected role in the study; followed by a consent form, and finally the focus group's registration page on focusgroupit.com. Their accounts were not active immediately after registration; pending approval and the focus group start date. All initial questions were presented at once on the first day (See the Daily Activity Guide in Appendix A). To limit the extent to which participants would influence each other in their responses to the initial questions, a non-biased approach was used; meaning, participants could not see other participants' responses unless they had already answered the same question. Responses to questions were directly recorded within the group database on focusgroupit.com, which was later exported for restructuring and analysis. A £25.00 Amazon eGift Voucher was given to participants who took part throughout the 5 days. Participants who were active for only 3 days or less were given a £5.00 Amazon eGift Voucher. This was communicated from the outset. Daily participation and activity were monitored through daily session logs. Participants who did not meet the expected daily participation level were encouraged to be more active through private emails. Approval for the study was obtained from the University of Leeds Research Ethics Committee; LTTRAN-102.

3.3.2. Instrument and sample questions

As already mentioned, the instrument used in this study was focusgroupit.com, which allowed the creation of open and closed-ended questions in the form of an online forum. Questions were presented with images and video where necessary to help clarify the question. Participants were presented with three main types of questions based on Krueger, Richard (2002). See Table 33 in Appendix B for the full set of questions, and Figure 6 for a flowchart showing the types and order of questions. The three main types of questions were:

1. Engagement questions that introduced participants to the topic, e.g. What is your preferred mode of transport when going to work?
2. Exploration questions prompted participants to go deeper into the topic, e.g. What was your experience like when using a shared vehicle like Uber?
3. Exit questions designed to explore anything missed during the discussion, e.g. Is there anything else you would like to say about making the experience of sharing a driverless vehicle attractive for yourself?

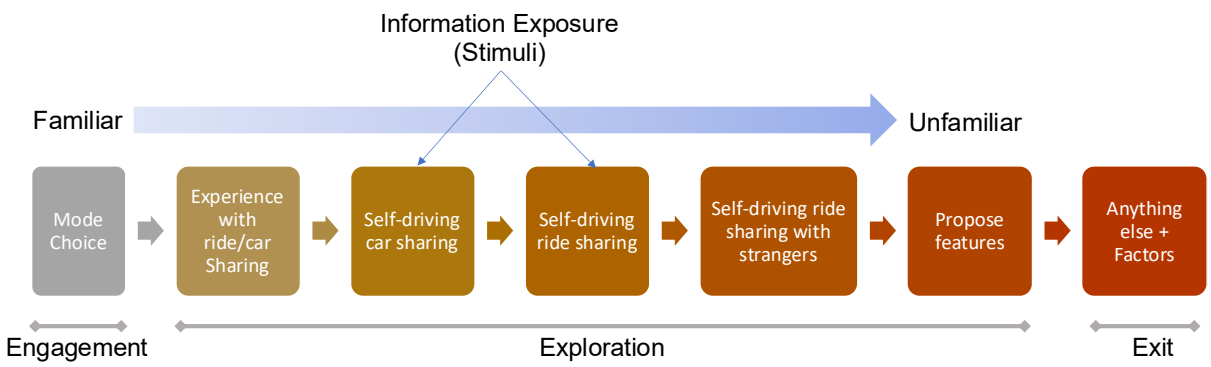

Figure 6: Flowchart on research method

3.3.3. Procedure

Participants were presented with 17 questions on the first day, with the 18th question (exit question) presented on the last day (see Table 33 in Appendix B). The questions presented transition from what participants are very familiar with (own motivation for their current mode choice) to what participants are slightly familiar with (current car-share and ride-share vehicles such as Uber) on to what they are unfamiliar with (SAVs); also see Figure 6. The scenario for a SAV that participants were presented with was a short video of a Chevrolet Cruise (autonomous vehicle), with no input controls for the user; i.e. no steering wheel nor pedals.

Participants were given a daily activity guide (See Appendix A for full details) that explained how to participate in the focus group during each day. On the first day, participants were encouraged to descriptively answer all or most of the questions. All questions were optional. On the second day, participants were requested to answer any remaining questions and to begin reading responses from other participants while reflecting on their responses. They were also encouraged to start adding comments to the responses from other participants, which would trigger an email notification to the relevant participant. Participants could also indicate agreement with a response by clicking on the "Agree" button. The moderator requested participants to clarify unclear responses, and also directed participants to opine on specific responses by other participants that disagreed with their responses.

Participants gave written responses to the initial questions, much like they would to an online questionnaire. However, unlike an online questionnaire, their responses were visible to other participants who had already answered the same questions. They

could then build on each others' responses by posting a public reply; similar to an online discussion forum. The moderator interacted with participants in the same manner but could post public or private replies as necessary.

3.3.4. Analysis of responses

Data generated from the focus group were mostly qualitative, from open-ended questions. NVivo was used to analyse the data, which is a software by QSR International that "supports qualitative and mixed methods research by helping researchers to organise, analyse and find insights in unstructured data" (NVivo, 2018). In a study that looked at qualitative research methods used in travel behaviour studies, Mars et al. (2016) noted that out of 18 researchers who used software analysis techniques, 11 used NVivo. Using NVivo, thematic content analysis was performed on the text to derive patterns, recurring themes and highlight important insights. Content analysis is defined by Hsieh and Shannon (2005, p. 1278) as the "subjective interpretation of the content of text data through the systematic classification process of coding and identifying themes or patterns". Coding is a form of qualitative data analysis that involves identifying passages of text and organising them by common themes; allowing the researcher to index the text into categories and subcategories and therefore establish a "framework of thematic ideas about it" (Gibbs, 2007).

In thematic content analysis, the researcher translates qualitative data into quantitative data by converting meaning units or condensed meaning units into codes. This process is known as coding. Erlingsson and Brysiewicz (2017) define a code as "*a label; a name that most exactly describes what this particular condensed meaning unit is about. Usually one or two words long.*" The generation of codes can be either deductive, in

which the researcher starts with a codebook, which is a list of themes or categories from existing theories and previous studies; or it can be inductive, in which new themes or categories are derived from the data during analysis (Bengtsson, 2016).

In this study, deductive coding was used, based on factors previously identified by Nordhoff et al. (2019) from automated shuttle passenger interviews. These were combined with the constructs from UTAUT2 to create the codebook for analysis. Participant responses that did not fit into this coding scheme were added from other sources through inductive coding, as shown in Table 9. For example, perceived safety was added from (Osswald et al., 2012) under perceived risks.

Table 6: Codebook with factors from Nordhoff et al. (2019) and UTAUT2 (Venkatesh et al., 2012)

Category numbering	Main category	Subcategory	Source
1.	Expectations about the capabilities of the automated shuttle	• **Full automation** – capable of handling all traffic situations without the need for human intervention • Comparison of automated shuttles to public transport systems	Nordhoff et al. (2019)
2.	Evaluation of shuttle performance	• Braking behaviour – strong and abrupt • Manual interventions by the steward	Nordhoff et al. (2019)
3.	Service quality	• **Availability** – Instant access to SAVs, service frequency, vehicle fleet, waiting times. • **Convenience** – How well the service adds to one's ease of mobility; door-to-door transport, connective ports, personalisation, Wi-Fi • **Comfort** – Anxiety, motion sickness, entertainment, refreshments, upkeep, abuse or misuse • **Flexibility** – demand-responsive, ability to change route and destination • Creation of advantages • **Reliability** – Access to a vehicle when needed by the user, and where needed, co-passenger punctuality, failure, number of stops per trip, travel time, vehicle fleet, vehicle range, waiting time, wear and tear	Nordhoff et al. (2019)

Category numbering	Main category	Subcategory	Source
4.	Travel purpose	• Use of automated shuttles in severe weather conditions • Use of automated shuttles in suburban and rural areas • Use of automated shuttles on closed areas • Use of automated shuttles for transport of goods • Use of automated shuttles in urban areas • Use of automated shuttles in touristic/unfamiliar areas • Use of automated shuttles due to temporary physical impairments (e.g., pregnancy, exhaustiveness) • One-way trips currently covered by car • Suitability of automated shuttles on daily trips	Nordhoff et al. (2019)
5.	Trust	• **Trusting automated vehicles** – feedback, locus of control, interaction with other road users • Preference for supervision of shuttle • **Trialability** – the ability to trial in a safe and secure environment, under supervision • **Perceived Risks –** higher/lower traffic safety, perceived safety, visibility, emotional factors and affective states relating to safety, job losses, ethical programming	Nordhoff et al. (2019)
6.	Performance Expectancy	• Evaluation of Shuttle Performance • Outcome Expectations • Perceived Usefulness • Relative Advantage	Nordhoff et al. (2019) UTAUT2
7.	Effort Expectancy	• Ease of Use • Perceived Ease of Use	UTAUT2
8.	Social Influence	• Social Factors • Subjective Norm	UTAUT2
9.	Facilitating Conditions	Access to resources that allow the use of the technology	UTAUT2
10.	Hedonic Motivation	Perceived enjoyability, pleasure	UTAUT2
11.	Price Value	• **Cost –** willingness to pay, relative cost, cost per trip, split trip cost • **Perceived Benefits -** Environmental Concerns – electric vehicle, reduced vehicle miles travelled, reduced traffic congestion, not having to drive, productive use of travel time	Nordhoff et al. (2019) UTAUT2
12.	Habit		UTAUT2

3.4. Results

3.4.1. Participants

Out of the 25 participants recruited, one withdrew at the start of the focus group, two were completely inactive throughout the five days, and one was removed for

misconduct in writing the same short non-informative answer to all questions. This left 21 participants, aged between 20 and 64 years, broken into smaller age groups, as shown in Table 7. All of the participants used a private vehicle at least once a week, were at least aware of self-driving cars and none of them were experts in the field of self-driving cars. It was a recruitment requirement for all participants to have prior car sharing experience. The composition of the focus group thus characterised by homogeneity; i.e. all participants have something in common, which is, frequent use of a private car and past use of a car sharing service. The variation in age and experience allowed for contrasting opinions in discussions.

Participants' daily activity was monitored. A participant was considered to be fully active if they followed the recommended engagement level in the daily activity guide (See Appendix A). This meant answering most of the initial questions on the first day, engaging with other participants on the second day, responding to questions from the moderator and other participants on the third day, reviewing their previous contributions to the discussions, and responding to the exit questions on the last day. Participants who engaged in discussions for not less than three days were considered to be moderately active. Of the 21 participants, 13 were fully active in the discussions and 8 were moderately active with minimal engagement with other participants.

Table 7: Participant information

Cultural	
I am a UK National	20
I have stayed in the UK for more than 5 years.	1
I have stayed in the UK for less than 5 years.	0
Using a car as a driver	
Almost every day	15
At least twice a week	4

At least once a week	2
At least once a month	0
Knowledge of self-driving cars	
I have never heard nor read about self-driving cars.	0
I am aware of self-driving cars but have very little knowledge about them.	16
I know a great deal about self-driving cars.	5
I study/research self-driving cars.	0
I develop self-driving cars.	0
Age Groups	
20 - 34 Years	13
35 - 49 Years	5
50 - 64 Years	3
Gender	
Male	10
Female	11
Preferred Mode	
Private Car	14
Cab/Ride Sourcing	0
Motorcycle	0
Bicycle	1
Bus/Coach	2
National rail/Other rail	1
Walk	3
Other modes	0

Participants from a large geographical spread across England were recruited; see Figure 7. Out of the twenty-one recruited participants, nine were from Leeds.

Figure 7: Geographical spread of recruited participants

3.4.2. Main categories and subcategories

The data analysis resulted in 953 coded references, which were coded into main categories and subcategories. From the codebook, only main categories that contained more than 100 coded references are reported in this study (see Table 8).

Table 8: Coded references per main category in descending order

Main Category	Number of Coded References
Trust	456
Service Quality	307
Price Value	123
Hedonic Motivation	23
Travel Purpose	15
Performance Expectancy	12
Effort Expectancy	9
Social Influence	8
Facilitating Conditions	0
Habit	0
Shuttle capability expectations	0
Evaluation of shuttle performance	0

Table 9 shows the subcategories for these three main categories, and for each subcategory, the number of participants with coded references and the number of coded references is provided. Figure 8 provides a visual representation of the number of coded references per main category and subcategory.

Table 9: Number of participants and number of coded references in each category

Category Number	**Main Category**	**Subcategory**		***Participants***	***Coded References***
1	Service Quality	Availability		7	8
		Comfort		15	67
		Convenience		18	50
		Flexibility		11	20
		Reliability		20	101
		+ Shared space quality – co-passenger interaction, proxemics, absence of driver	Newly added	19	61
2	Trust	Trusting automated vehicles		21	65
		Preference for supervision		16	66
		Trialability		9	14
		Perceived risks		21	153
		+ Security – cybersecurity, liability, personal security, privacy, secure storage	Newly added	20	72
		+ Trusting co-passengers – co-passengers as strangers, co-passenger behaviour, co-passenger interaction, shared space sentiment	Newly added	21	86
3	Price Value	Cost		19	65
		Perceived benefits		18	58

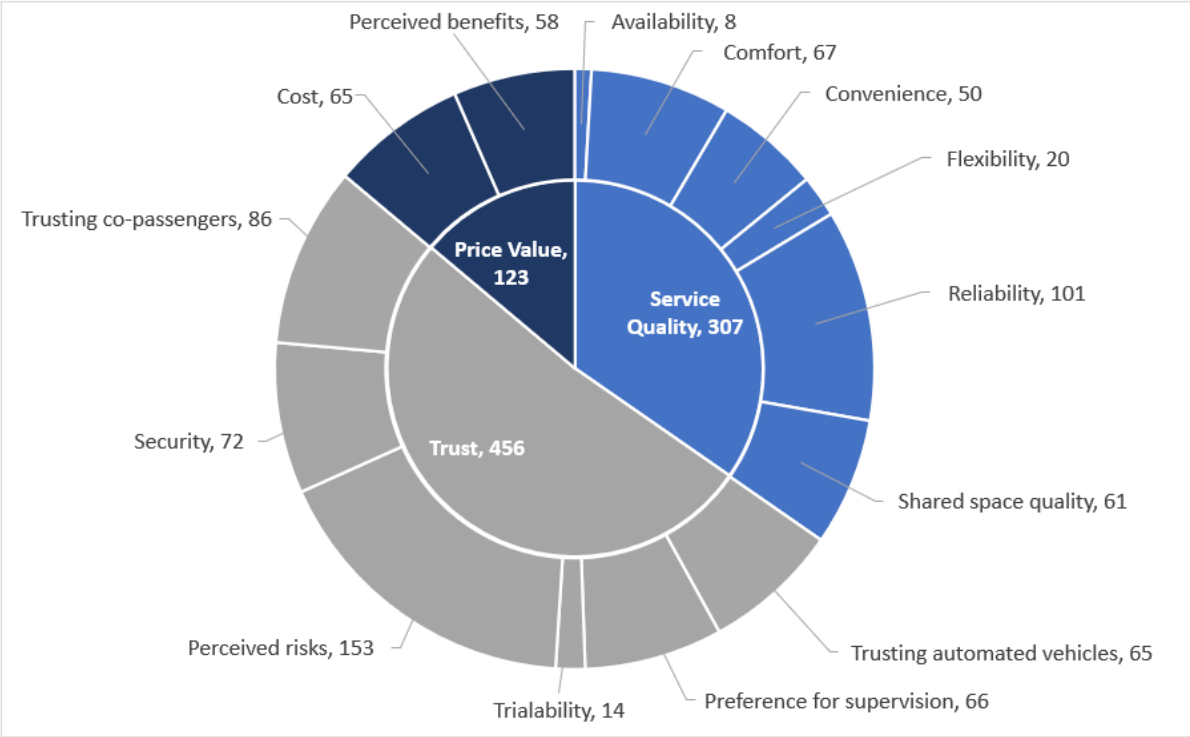

Figure 8: Main categories and subcategories by the number of coded references.

In the next section of this chapter, each factor is discussed in more detail and sample quotes from participant responses are provided. For each subcategory presented, the following guide was used to decide on the number of example quotes to include; for consistency and brevity:

(1) Less than ten participants – one quote
(2) Ten to fifteen participants – two quotes
(3) Sixteen or more participants – three quotes

3.4.3. Main category 1: Service Quality

3.4.3.1. Availability

Availability pertains to the instant access to SAVs and the frequency of SAV services with short waiting times (Shen et al., 2018). Only seven participants (33%) talked about availability as an important factor. Some participants talked about how they

expect improved service quality through automation as the availability of vehicles would not be tied to the availability of drivers. Others expect to have guaranteed pickup times with limited walking to access the car, similar to their privately owned vehicle. One participant said the following:

> *"I think for certain jobs and certain work routes a car is often necessary as public transport is inconvenient and/or unavailable." [P20]*

3.4.3.2. Comfort

Fifteen participants (71%) mentioned the importance of comfort in their travel experience and expressed this by talking about abuse or misuse of the SAV (5 participants), anxiety (8), entertainment (8), motion sickness (1), refreshments (4) and upkeep of the vehicle interior (5). Some participants talked about how a privately owned vehicle allows them to enjoy a quiet moment after a busy day of work, to listen to music, relax and think. Others expressed the need for comfortable and spacious seating, without being cramped, too hot or too cold, and not smelly. Two of them said the following:

> *"I like that I can be assured of the comfort and cleanliness of the vehicle and it is (usually) a reliable mode of transport." [P1]*

> *"I like being alone in my car, its stress relief and I enjoy driving with my choice of music…. Driving is a lot quicker for me than public transport, plus a lot more reliable without being cramped, too hot/cold, noisy, smelly etc." [P9]*

3.4.3.3. Convenience

Eighteen participants (86%) referred to convenience as an important factor in influencing their choice of transport. Easy booking and payment, connective ports for charging phones and onboard internet were mentioned as some of the expected features onboard SAVs. Others talked about the convenience of not having to look for and pay for parking, while others expressed concern about whether SAVs will be able to be as convenient as their privately-owned car. Three participants said the following:

> *"Yes, I would probably use a driverless shared vehicle as much as I use a driven one now – i.e. when it's the most convenient mode of transport for the journey I wish to make." [P17]*

> *"I think for certain jobs and certain work routes a car is often necessary as public transport is inconvenient and/or unavailable." [P20]*

> *"can be dropped off at my exact location and don't have to worry about parking etc." [P13]*

3.4.3.4. Flexibility

Flexibility gives users freedom and independence from rigid service structures, by allowing users to have greater control over their trips. Eleven participants (52%) mentioned flexibility as a factor influencing their decision to use a certain mode of transportation. One participant mentioned the ability to set co-passenger preferences, e.g. female only, while others expressed interest in being able to define custom or optimal routes instead of solely relying on SAV to set route. Participants also explored the ability to set max speed or have different driving modes (relax/gentle/rush), being able to

change the destination. A privately owned vehicle allows users to go anywhere at any time, and this flexibility is what some participants hope to see in SAVs. Lastly, the ability to cancel a trip for a refund if not feeling safe with passengers already in the SAV was also mentioned. Two participants said the following:

> *"I also like using my vehicle as I can choose which route to take and/or change the route if required." [P15]*

> *"On the sharing aspect, the ability to not get in the vehicle (if you feel unsafe with the passengers already in) and have an option for money to be refunded easily" [P20}*

3.4.3.5. Reliability

All twenty-one participants agreed reliability is an important factor to consider. Participants expressed reliability by talking about co-passenger punctuality (8), failure (15) with ten of them concerned about emergency actions during system failure, number of stops per trip (8), travel time (11), waiting time (10) as influenced by availability and co-passenger punctuality, wear and tear (4). Participants expected that SAV solutions should be reliable in general; free from malfunction, with contingencies for eventual malfunction. The service delivery should have short waiting times, short travel times, while taking the quickest route without too much delay from picking up other passengers. Participants expressed that:

> *"My experience with using UBER over several years has been mostly positive, the service has been reliable and I normally get a nice driver." [P4]*

"I did not like the experience. The uber goes on longer routes and they do not drop you off at your designated area." … "P9, it's best to pay for a taxi fare than car sharing. Especially if you need to get to your destination quicker. Food for thought..." [P10]

"Travelling by bus is expensive, unreliable, particularly in bad weather (in the past I have had to walk home in the snow) and I can stand at the bus stop for ages as buses go past full or only go to the city centre." [P11]

3.4.3.6. Shared Space Quality

Nineteen participants (90%) talked about shared space quality in SAVs; predominantly around the topics of co-passenger interaction (13) and proxemics (13). Some participants talked about the awkwardness of forced conversation with strangers, while others remarked on how they often enjoy chatting with drivers. Participants agreed that shared space can bring about unwanted interaction, which can make the experience of using SAVs unpredictable. The need for preserving personal space was strongly emphasised, with some participants worried that this may not be possible in ride-share SAV solutions. Three of them saying the following:

"Especially if you have a stressful job, it's lovely to have your own space and think your own thoughts." [P10]

"Room - to not be too close to others and still have enough personal space" [P13]

"The separation between passengers for security (including private space for a bag) plus personal boundaries." [P9]

3.4.4. Main category 2: Trust

3.4.4.1. Trusting automated vehicles

Scepticism about the capabilities of AVs was fuelled by drawing parallels to past failures of other technologies such as satellite navigation. All Twenty-one participants mentioned the trust of automated vehicles as a factor. The discussion was mostly around trust of automated vehicles (16), feedback (15), locus of control (13) and other road users (3). Participants talked about the unease of putting their lives in the hands of unsupervised automation, being more willing to use SAVs once the technology matures and there is a proven safety record. They also discussed the need for continuous feedback about the status and actions the SAV performs, e.g. trip information, how much time to get into or out of the SAV. Participants also expressed concern about completely surrendering control of the vehicle to an automated system, with no user controls. Others countered this by pointing that the driving style of some people is very unsafe, and perhaps automation may be a welcome alternative. Three participants said the following:

> *"I wouldn't feel as safe as a result of my life being in the hands of a machine." [P1]*

> *"There just isn't enough evidence or proof either way, it will take years to build up any kind of trust with self-driving cars let alone car-sharing and self-driving" [P3]*

> *"I cannot imagine I would ever feel safe using a driverless vehicle, regardless of whether it was shared or not." [P19]*

3.4.4.2. Preference for supervision

Seventeen participants mentioned some form of preference for supervision of SAVs; whether with a steward onboard or remote supervision. The lack of a driver was seen as a negative feature by some participants due to the newness of SAVs. This was mainly for two reasons; as a fallback in case of automation failure, and as a moderating authority figure to ensure onboard passenger safety in the event of disruptive co-passengers. Participants said the following:

> *"My only issue is if a problem arises i.e. difficult/aggressive passenger/passenger is unwell/issues with the car. I would need to know how I could contact someone for help". [P10]*

> *"Having a driver would make me feel slightly better about sharing with strangers, particularly if it's the same driver each time and I trust them". [P11]*

> *"… having a human driver could add a (perceived) element of safety in e.g. risky/lonely situations, but also adds an element of additional risk." [P17]*

3.4.4.3. Trialability

Nine (9) participants talked about the importance of trialability in shaping their perceptions of SAVs. The discussion was primarily around experiencing SAVs in a controlled and safe environment, and an established safety record. One of the participants said:

"I would consider it after reading more about it + experiencing it in a safe, trusted environment - i.e. with people I know - in a car park or workplace." [P9]

3.4.4.4. Perceived risks

All 21 participants mentioned perceived risks in one form or another. Participants talked about job losses due to automation (2), perceived safety (20) and traffic safety (19). Perceived safety is the degree to which an individual believes that using a system will affect his or her well-being (Osswald et al., 2012). Most participants (18) were concerned about an increase in risk from sharing a vehicle with strangers at night. A few felt vehicle safety could increase as automation brings superior driving performance at night due to reduced visibility for human drivers. Participants expressed concerns about software failure by drawing parallels to other automated systems that have failed in the past, concerns about greater risk at night, and the absence of a driver was perceived as safer by some participants and less safe by others. Participants also expressed the need for SAVs to have the same safety features and go through the same rigorous safety tests as normal cars. Only one participant [P8] talked about the risk of catching a cold from co-passengers. Three participants said the following:

"The lack of ability to 'take the wheel' (both metaphorically and literally) in one such moment of crisis is a concern for me. No brake, no wheel - it seems there is not much left to do in a breakdown than to jump out the door/window but then you are relying on the car retaining enough function to allow you to do that!" [P1]

"Unsure at the moment. In one sense it would initially seem safer, they would be limited to the speed limits of roads etc. However having to rely on computer software for your travel and safety initially is quite daunting, especially after the issues had with the Boeing 737 planes." [P15]

"I think that driverless cars could potentially be safer than some drivers. I have felt unsafe when being a passenger in some cars" [P20]

3.4.4.5. Security

Twenty participants (95%) expressed security as a factor, by talking about cybersecurity (8), liability (9), personal security (18), privacy (5) and secure storage (8). Contributions from participants included concerns about intrusion from hackers that can corrupt or affect the software operation of the vehicle and access data about trip history. Others talked about liability in the event of an accident or an incident with a co-passenger. Participants noted that since SAVs are unlikely to refuse entry to abusive or disruptive persons and the expected lack of background checks, personal security may have to be enforced through a camera continuously recording inside the vehicle due to the lack of a witness such as a driver. Some suggested a direct line to police can be helpful for emergencies. Lastly, others mentioned the need for storage of luggage in a secure compartment with lockable doors to avoid co-passengers taking the wrong bag. Three participants said the following:

"If I was in one of these cars and it had an accident, would I be covered as a passenger?" …. "I'd have to ask to be picked up and dropped off a few streets away from my actual home." [P11]

"I think I would be apprehensive about sharing a vehicle with a stranger if I was been picked up/dropped off at my home or place of work. It would become a concern if you were in the vehicle with the same people routinely. It just sits a little uneasy with me that strangers would know my routine." [P15]

"Thinking about this again - I wouldn't like a driverless bus for the personal safety aspect either. Having a driver means someone can be refused to come on board or the vehicle can be stopped, and they can be told to leave if they are abusive. Police can be called. What happens with driverless vehicles?" [P20]

3.4.4.6. Trusting co-passengers

All of the twenty-one participants expressed trust in other passengers as a major factor in the acceptance of SAVs. Unlike AVs, SAVs have the additional component of user interaction with other passengers in a confined space, which requires trust in other passengers. For this study, some participants said the following:

"I wouldn't feel comfortable driving alone with strangers at night it's a safety concern." [P3]

"You do not know who else may be picked up and you are in a small confined space." [P14]

"I think I would feel uncomfortable initially. Even though on public transport you are often sat next to people you do not know, there are often

many other people as well. I think I wouldn't like to be in such a confined space with people I didn't know." [P15]

Shared space sentiment was investigated to understand participant attitudes towards shared space in SAVs. Responses that fell under the nodes shown in Table 9 were coded for sentiment. A node is a name given to a group of related coded references. In the *Co-passenger strangers* node, the following are examples of how sentiment was coded:

<u>Very positive:</u>

"I'm friendly and these things would attract people who are comfortable around others so I don't think it would be too bad." [P13]

<u>Moderately positive:</u>

"About the same, apart from the added extras of alcohol maybe on a night time." [P21]

<u>Moderately negative:</u>

"I wouldn't feel comfortable driving alone with strangers at night it's a safety concern." [P3]

<u>Very Negative:</u>

"I would not feel safe. I personally do not like to share a taxi with someone I don't know. People are people - but the risk element that something may happen worries me." [P16]

Table 10 summarises the frequency of these sentiments.

Table 10: Coded Sentiment for Shared Space in SAVs, number of participants.

Nodes	A: Very positive	B: Moderately positive	C: Moderately negative	D: Very negative
1: Co-passenger strangers	3	6	48	24
2: Co-passenger interaction	5	11	13	4
3: Conversation	3	9	8	2
4: Safety at night	3	8	24	13
5: Shared Space Quality	5	17	24	6
6: With no driver	3	9	15	10

3.4.5. Main category 3: Price Value

3.4.5.1. Cost

Nineteen participants expressed cost per trip as a factor in their transportation mode choice, especially from frequent use when compared with a privately owned vehicle. In their discussion, participants generally agreed the fuel cost of using a private car is lower than using current shared modes of transport. Others pointed out that these costs are offset by not having to pay for car insurance, tax, MOT, maintenance, repairs, parking, etc., which can make owning a private car expensive. Only nine participants mentioned split trip cost with fellow passengers as a factor that could influence the acceptance of SAVs. Three of them expressing the following:

> *"I would like all of these, but worried that it would make the journey more expensive." … "I agree but also the only way it can be economically and financially viable is through car-sharing." [P3]*

> *"Good for the environment but I worry about expense and sharing." [P8]*

"…easy to use via apps and can see your history. Also, I don't need cash which I never carry! Sometimes I can feel like it gets expensive though when used often." [P13]

3.4.5.2. Perceived benefits

Perceived benefits were in three forms; environmental concerns (17 participants), productive use of travel time (3), and not having to drive (2). Participants who expressed concern for the environment talked about reduced traffic congestion and the eco-friendly nature of ride-sharing and electric vehicles.

"I like the positive impact that the act of car sharing has on the environment. I am environmentally conscious, and this is a big plus for me, knowing that I am doing something better for the environment as compared to riding solo." [P1]

"Positive would be that car-sharing has less impact on the environment." [P15]

"If I'm sitting in a vehicle (and not driving) I like to spend the time doing something else, whether that's talking, reading, working." [P17]

3.5. Discussion

Unlike previous studies in this context that interviewed users after a short ride on a specific self-driving shuttle (Madigan et al., 2016; Eden et al., 2017; Nordhoff et al., 2017; Nordhoff et al., 2019), this study looked at the user attitudes and perceptions in the context of competing mobility solutions to understand user requirements for high-speed SAVs, without fixating on one specific mode of transportation. Participants expressed

broader attitudes that are not only relevant to SAVs, but the general mobility needs of users. The next section summarises the main outcomes from the focus group, divided into three main categories; service quality, trust and price value. Lastly, a conceptual acceptance model for SAVs is introduced that integrates these three main categories into UTAUT2.

3.5.1. Service Quality

Service quality attributes such as comfort, convenience and reliability were discussed prominently. Participants saw sharing of vehicles, particularly with strangers, as having a detrimental effect on the quality of their travel experience. This same conclusion was reached by Nordhoff et al. (2019) who recommended further research on the perception of privacy and pleasure in shared vehicles, across different cultures and income groups.

Service quality attributes such as comfort, convenience, availability (accessibility) and reliability have been described by Redman et al. (2013) as important for creating a mode shift from privately owned car to using public transport, for which buses often fill the first and last-mile portion of the trip. In a simulation study that replaced buses with SAVs for the first and last mile section of a trip, Shen et al. (2018) found that increasing the availability of SAVs can reduce out-of-vehicle travel times (OVT) in ride-share scenarios. However, increased demand during peak hours can reduce the availability of shared vehicles, and also increase the cost per trip to lower the demand (Uber, 2018); both of which may be undesirable for users as they reduce the quality of the service. Comfort is important in user travel experience, which Madigan et al. (2016) recommended should be considered when researching acceptance of SAVs, and later

found onboard comfort to be very important in determining user preferences towards SAVs (Madigan et al., 2017). These factors (comfort, convenience, availability, reliability) were highly discussed by participants in this study, reaffirming their importance to private vehicle users. The same can be said for flexibility, but in a slightly different sense.

Participants noted that sharing a ride may harm the flexibility of their travel experience, which is contrary to Krueger, Rico et al. (2016) who expect that SAVs may provide flexibility levels similar to private cars. This conclusion is only drawn by assuming the inflexibility of ride-sharing will be offset by the convenience of not having to drive. However, Geldmacher et al. (2017) note that full private car flexibility in SAVs is achievable under a car-sharing model. Just like Nordhoff et al. (2019), reliability was found to be an important attribute influencing mode choice, and most likely to influence the choice to use SAVs. This service quality attribute is most likely to be affected by waiting times at the start of a trip and travel time; which in ride-share scenarios will be influenced by the number of stops per trip and co-passenger punctuality. We know from previous research that travel time is a significant factor in determining the choice between using a private car or public transit solutions (Abdulkareem et al., 2020), and this is likely to impact the service quality of SAVs as well.

The nature of ride-sharing is that the interior space of the vehicle is communal; allowing passengers to freely interact with each other. Early SAV prototypes took this same configuration, but instead of having up to four passengers, they increased the number to 8 – 10 passengers. As Merat et al. (2017) point out, this approach fails to take into account user requirements for enhanced personal space; potentially creating tension and stress for users, especially on longer journeys. Participants in this study echoed similar sentiments about the importance of preserving personal space boundaries.

Results in this study emphasise the importance of shared space that can be positively perceived by encouraging or discouraging co-passenger interaction in line with user preferences and preserving personal space. This was further explored by Ong et al. (2019), who introduced the concept of segmented shared spaces in ride-share SAVs to enhance in-vehicle privacy and prevent passenger interaction. This study introduces Shared Space Quality, which goes beyond mere segmentation to encapsulate enhanced personal space, proxemics, privacy and moderate passenger interaction.

3.5.2. Trust

Participants reflected on the lack of evidence to support any form of trust in automated vehicles, regardless of whether they are shared or not. This result is consistent with Zmud and Sener (2017) who found a lack of trust in the technology used in AVs to be the most frequently cited reason for being unlikely to use. Trialability can mitigate this lack of trust in automation by giving users the ability to experience SAVs in a safe and trusted environment. Merat et al. (2017) found that interaction and experience with automated vehicles greatly influence user trust, similar to Lavieri, Patrícia S. et al. (2017) who also found that individuals who already experienced ride-sharing services are more inclined to adopt SAVs.

Trust is also influenced by how safe users perceived the SAV to be. For non-shared AVs, perceived safety is affected by the vehicle's ability to safely follow the road and planned trajectories (Elbanhawi et al., 2015). For SAVs, perceived safety also includes any risk from internal agents such as co-passengers, particularly given the absence of a driver. Concerns were raised about software vulnerability to hacking, background screening of co-passengers, liability in the event of an accident, privacy, and reduced onboard security

due to the absence of a driver. This is in line with Salonen (2018) who, in a study involving driverless shuttle buses, found that passenger perception of personal in-vehicle security for SAVs was worse than that of a regular bus, even though vehicle safety was rated higher. The issue of liability is very contentious. Any SAV solutions are likely to be controlled by some form of artificial intelligence (AI), which would be responsible for its own actions. Perc et al. (2019) proposed that such issues need to be resolved through legislation before the introduction of AVs and SAVs; to help put the minds of users at ease. To further ease users' minds, they also proposed users need to be aware of the actions AI will take during critical situations. Any effective AI solution implemented in SAVs will have to improve safety; i.e. drive safer than humans. While manufacturers strive for perfect safety records, this is not possible in practice, and as Perc et al. (2019) point out, users of AI driven systems such as SAVs need to understand this limitation.

Participants expressed concern for sharing such a small space with strangers, especially at night, or who may be intoxicated. Previous studies have found the lack of familiarity with other passengers increased this discomfort (Bansal, Prateek et al., 2016). In a survey on ride-sharing, Merat et al. (2017) found similar results in which passengers were more willing to share with friends and family (90.8%) and less with strangers (51%). Building on this, participant sentiment towards shared space with strangers, within a SAV with no driver was mostly negative in this study, similar to Salonen (2018) who highlighted the psychological impact that the absence of a human driver has on passengers. While only one participant talked about the risk of catching a cold from co-passengers, in a post-Covid-19 world, this is likely to be a greater concern for more people.

3.5.3. Price Value

Haboucha et al. (2017) found that cost is an important variable in the choice to use SAVs, which was found by Zmud and Sener (2017) to be the third most cited reason (after trust and safety) for being unlikely to use AVs. However, in this study, some participants were optimistic about ride-sharing being more affordable through split trip cost. Yakovlev and Otto (2018) noted some of the benefits of car-sharing and/or ride-sharing to users is no acquisition costs and no car ownership costs (maintenance/repair, insurance, tax, etc.). Participants in this study mostly overlooked these tangible financial benefits and focused on SAV trip costs, indicating a lack of awareness of these benefits, which will require greater emphasis when communicating SAV benefits to future users. It could also indicate participants were not concerned about these cost benefits as they have already incurred the costs in acquiring their own private vehicle.

Lavieri, Patrícia S. et al. (2017) found that individuals with a green-lifestyle inclination, or concern for the environment, are more inclined to adopt SAVs as a preferred mode of transport. Most participants in this study expressed similar sentiments of environmental concern. Only three participants (e.g. P17 above) talked about productive use of their travel time, which was described by Wadud et al. (2016) and Diels (2017) as one of the benefits of using automated vehicles and SAVs. This less optimistic result is consistent with Cyganski et al. (2015), Singleton (2018) and Nordhoff et al. (2019), who found that passengers in AVs and SAVs may not utilise their travel time productively due to being more like car passengers instead of train passengers, thereby reducing the value of travel time. These researchers attributed the reduced value of travel time primarily to short trip lengths, and Saeed et al. (2020) suggested that trips longer than 2.5 miles may offer better benefits.

3.5.4. Conceptual technology acceptance model for shared automated vehicles

From the results of this study, service quality and trust are important constructs not found in UTAUT2 for understanding user acceptance of SAVs. By combining the constructs from UTAUT2 and the findings from this study, as extended model predictors (indicated by blue boxes in Figure 9), an acceptance model for SAVs is proposed. This is only an initial draft intended for further development, further research and later validation. In this initial draft, the main categories from this study are added to UTAUT2 as constructs (latent variables) and the sub-categories as indicators (measurable variables).

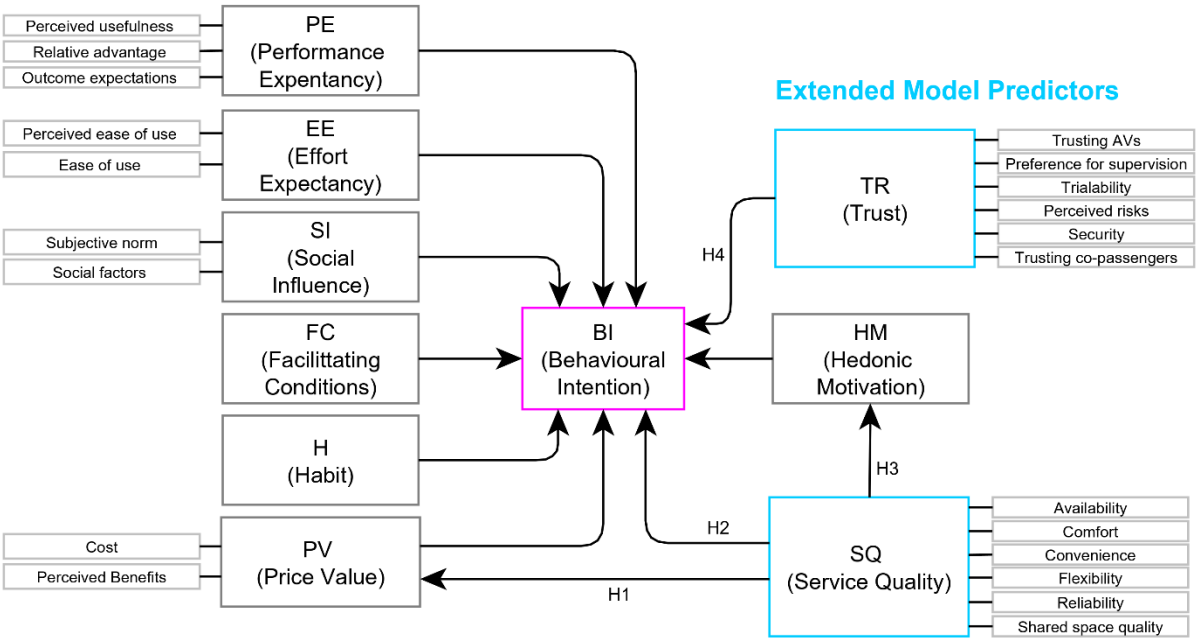

Figure 9: A conceptual acceptance model for SAVs developed by combining UTAUT2 with findings from this study as extended model predictors

The following are tentative hypotheses from this initial model, for the extended model predictors:

H1.Service quality is expected to influence price value.

H2. Service quality is expected to directly influence users' behavioural intention (BI) for SAVs

H3. Service quality is expected to influence hedonic motivation (pleasure) and

H4. Trust is expected to have a direct influence on BI.

3.6. Limitations of this study

This study has several limitations. First, the target participants in this study were only private car owners, who make up 60% of trips in England (DfT, 2018). As such, the results may not apply to users who do not own and use private cars, as they may express slightly different attitudes. Second, participants in this study did not directly experience SAVs, which may be a problem (Zmud and Sener, 2017). Nonetheless, it yielded results similar to Nordhoff et al. (2019), whose framework was one of the starting points for the coding scheme used here. Many of the newly created categories by Nordhoff et al. (2019) were not coded in from the results; such as braking behaviour, ethical programming, use of automated shuttles in severe weather. This may be due to the lack of direct experience of SAVs by participants. However, this study explored the interests and concerns of naïve potential users of future SAVs, who need to be convinced to adopt a mode switch from private car use to SAVs in the future. Therefore, a key takeaway from this study is that the three main factors (service quality, trust and price value) prominently discussed by participants, need to be prioritised in developing and researching future high-speed SAVs.

Lastly, since this research was conducted online without access to SAVs on the market, it was necessary to sensitise participants on current developments of SAVs through short descriptions with pictures and videos. Participant responses are guided by this information, along with other sources they may have come across beforehand (Rahman et al., 2017). This approach may give unrealistic results due to hypothetical bias,

as each participant fills knowledge gaps with their imagination. In attitude research, this is known as 'information exposure approach', and participants can develop different, and at times even inaccurate mental models of SAVs (Körber et al., 2018). Future studies could build on the present results by applying them to acceptance studies with actual high-speed SAVs, in the few locations where these now start to become available, such as Waymo and Cruise (Mcgee, 2019).

3.7. Conclusions

This focus group study brought together 21 private car owners in the United Kingdom to discuss attitudes, perceptions and preferences for using private vehicles, current car-share and ride-share modes, and future high-speed (passenger car type) SAVs. Previous acceptance research had found this subset of users to be the least likely to use SAVs. The adoption of future high-speed SAVs by this subset of users is important for the realisation of the potential benefits of SAVs, such as reduced congestion, accident reduction, etc. Discussions began with current familiar modes of travel that participants use in their daily lives, through to the unfamiliar future of high-speed SAVs; exploring both car-share and ride-share SAV scenarios. This is the first study on the acceptance of high-speed SAVs, as opposed to low-speed (pod/shuttle type) SAVs, that focuses on private car owners. From a long list of factors based on previous research, three main factors (service quality, trust, price value) came out as overwhelmingly discussed; more than all the other factors. These three main factors may be of prime importance for convincing naïve private car owners to consider giving up their cars for high-speed SAVs. From its findings, this study introduces Shared Space Quality as one more important indicator for service quality, and further introduces Security and Trusting Co-passengers as two important indicators of Trust. For SAVs, Trusting Co-passengers was found to be

as important as Trusting Automated Vehicles, which was reaffirmed by the overall negative sentiments towards shared space in SAVs.

The findings of this study offer useful preliminary insights that can be used in later high-speed SAVs acceptance studies, as part of an extended UTAUT2. Currently, there is no existing technology acceptance model that seems directly suitable for studying/modelling acceptance of high-speed SAVs. A tentative first draft of such a model is proposed by adding the findings from this study (Trust and Service Quality) to UTAUT2 as extended model predictors; for testing and validation in future research. Other important findings of this study such as Shared Space Quality, Security and Trusting Co-Passengers can be used as indicators in the proposed measurement model for future research on acceptance of high-speed SAVs.

Chapter 4

Study 2: The Role of Service Quality and Trust in Shaping British Drivers' Intentions to Use Shared Automated Vehicles - A PLS-SEM Analysis of an Extended UTAUT2 Model

Chapter 4 Study 2: The Role of Service Quality and Trust in Shaping British Drivers' Intentions to Use Shared Automated Vehicles - A PLS-SEM Analysis of an Extended UTAUT2 Model

4.1. Introduction

The aim of this study was to collect quantitative data to test the conceptual Shared Automated Vehicles (SAVs) acceptance model by Dichabeng et al. (2021), by engaging participants in typical ride-share scenarios that allow them to experience future SAVs. The conceptual acceptance model was a modified version of Unified Theory of Acceptance and Use of Technology (UTAUT2) that introduced Trust (TR) and Service Quality (SQ) as new constructs. As part of creating a measurement model, questionnaire items for the newly proposed indicators were generated; adding to existing model indicators in UTAUT2. An online survey instrument was used to collect quantitative data to test the hypotheses for the proposed research model through statistical testing using a Partial Least Squares-Structural Equation Model (PLS-SEM). The results from this study would allow constructs that do not have a significant influence on behavioural intention be eliminated from the model.

For participants, this study focused on private vehicle owners, as previous research has shown they are the least likely to use SAVs; particularly in the case of ride-SAVs. This was shown in a survey study conducted by Nordhoff et al. (2020c) after participants took a ride in an automated shuttle. They found intention to use automated shuttles was negatively predicted by car use. Further, in a stated preference study with 833 participants, Clayton et al. (2020) found that only 38.9% were willing to use ride-share automated taxis, but were more willing (47.5%) to use car-share automated taxis.

To expand on the vocabulary around SAVS, new terms are introduced in this study. These are Private Ride-Sharing (PRS), Private Car-Sharing (PCS), Communal Ride-Sharing (CRS) and Communal Car-Sharing (CCS) (See 4.3. & 4.4. for definitions and explanations). However, only PRS and CRS are the focus of this chapter, alongside Flexible Ride-Sharing (FRS) as defined by Ong et al. (2019).

4.2. Study Aims

- To collect data on user acceptance for future SAVs using UTAUT2 with extended model predictors.
- To examine the effect of the extended model predictors Trust (TR) and Service Quality (SQ) in UTAUT2 on individuals' Behavioural Intentions (BI) to use highly automated ride-share vehicles.
- To examine the interrelationships between these new constructs and the UTAUT2 constructs.

Research Question:

- To what extent do the factors Trust (TR) and Service Quality (SQ) affect user acceptance of SAVs?

4.3. Definitions and Taxonomy

A number of shared mobility terms are relevant to this study, as highlighted in Figure 10 below, followed by their definitions.

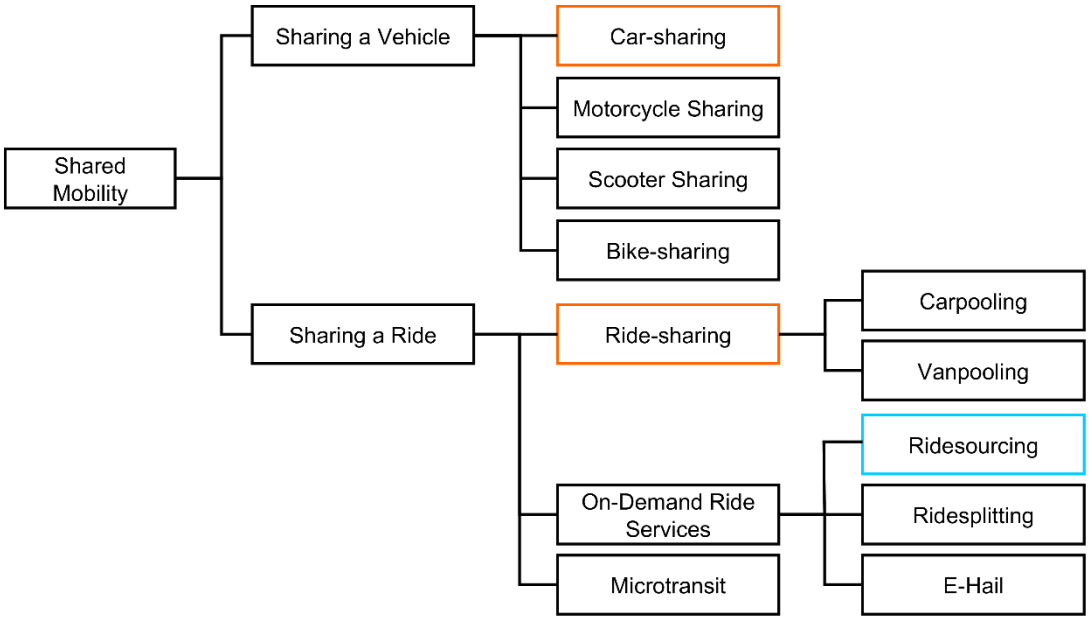

Figure 10: Taxonomy on shared mobility (Jin et al., 2018)

The following are definitions taken from SAE J3163 – "*Taxonomy and Definitions for Terms Related to Shared Mobility and Enabling Technologies*" (SAE, 2021b):

Car-sharing - offers members access to vehicles by joining an organisation that provides and maintains a fleet of cars and/or light trucks. These vehicles may be located within neighbourhoods, public transit stations, employment centres, universities, etc.

Ride-sharing – (also known as carpooling and vanpooling) is defined as the formal or informal sharing of rides between drivers and passengers with similar origin-destination pairings.

Ridesourcing – services are prearranged and on-demand transportation services for compensation in which drivers and passengers connect via digital applications.

The above taxonomy by SAE is based on an understanding of current available services. With the introduction of SAVs, we can expect ridesourcing to become ubiquitous for Level 4 vehicles that do not operate on a fixed route (See Figure 11 below). UberPOOL

already offers carpooling through ridesourcing. A key distinction between ride-sharing and car-sharing is that in ride-sharing, users can use the vehicle for only one trip with the next trip likely being in a different vehicle; whereas car-sharing can allow users to use the same car for multiple trips.

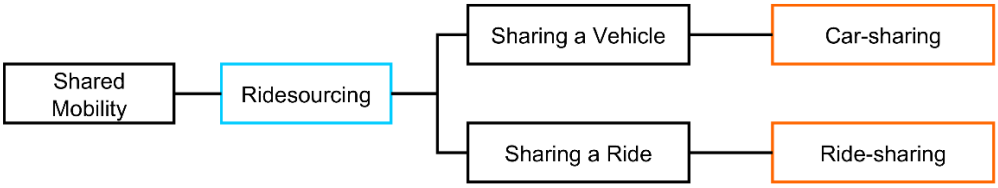

Figure 11: Expected ubiquity of ridesourcing for SAVs

4.4. Conceptual Mapping

There is a lack of terms and use cases in this area. Tentatively, we introduced our own definitions by generating four conceptual use cases. For this study, the proposed terms for SAVs, as derived from the four-quadrant concept model, are shown below in Figure 12 and Table 11. This is derived from ride-sharing vs car-sharing (Krueger, Rico et al., 2016; Yakovlev and Otto, 2018) and private sharing vs communal sharing (Howard and Dai, 2014) as likely development drivers for future SAVs. Users would be able to enjoy a variety of commuting experiences according to their mood and preference. Each quadrant is briefly explained below.

Q1 Private Ride-sharing (PRS) – would offer users increased privacy through segmented shared space interior, without allowing cross interaction between passengers.

Q2 Communal Ride-sharing (CRS) – users are able to interact with other passengers through an open and communal interior.

Q1-2 Flexible Ride-sharing (FRS) – users are able to configure the vehicle's segmented shared space interior for increased privacy or a shared space that is more communal; promoting interaction with other passengers (Ong et al., 2019).

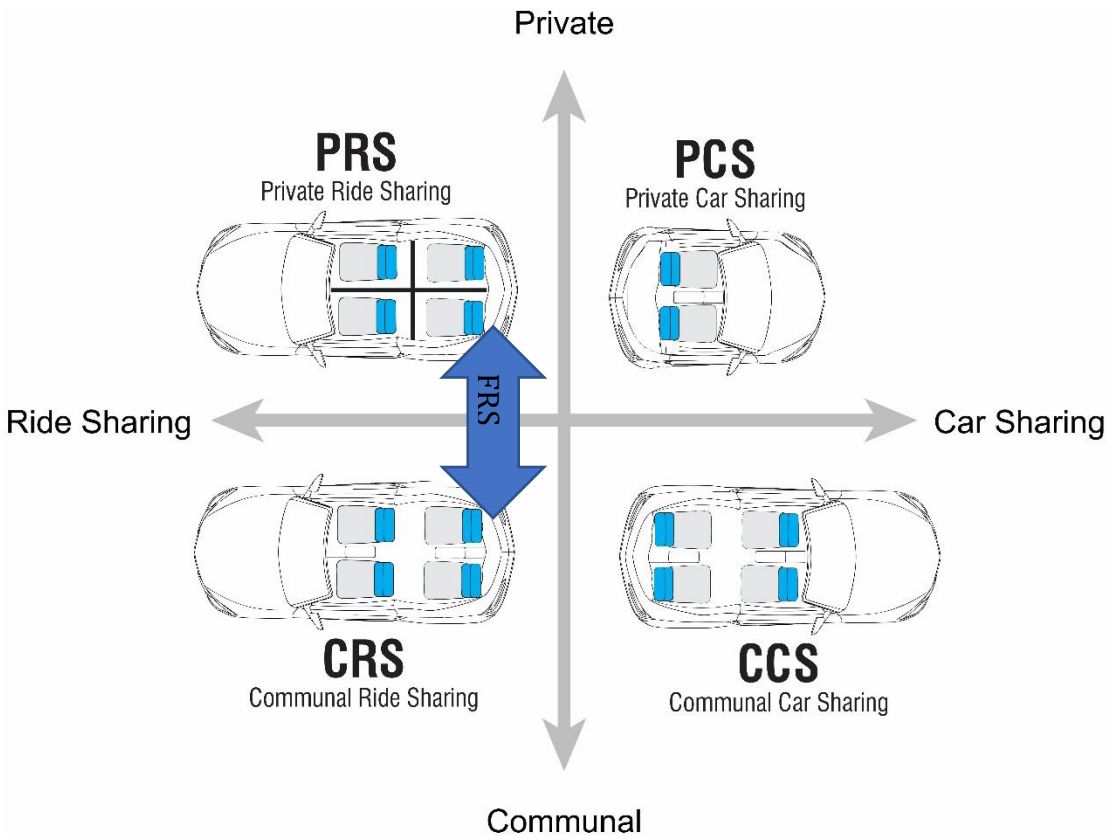

Figure 12: Four-quadrant conceptual mapping model of use cases for future SAVs

Table 11: Key defining attributes and features of each scenario

Ride-sharing	Attribute	Feature	Abbr.
	Private	Segmented Interior	PRS
	Communal	Open Interior	CRS
	Flexible	Configurable Interior	FRS

Figure 14 illustrates commuting experiences in SAVs, presenting three configurations derived from the four-quadrant model of mobility concepts. It highlights PRS, which prioritises passenger privacy with segmented spaces, reflecting the PRS

concept; CRS, which fosters interaction in open interiors, aligning with the CRS concept; and FRS, which offers adaptable interiors that transition between private and communal settings, derived from the FRS concept. The four-quadrant model underpins Figure 14 by providing a conceptual framework that categorises user preferences for privacy and interaction in SAVs. It simplifies the model into three practical use cases, demonstrating the adaptability of SAVs to diverse user needs while retaining the emphasis on privacy and interaction as critical design considerations.

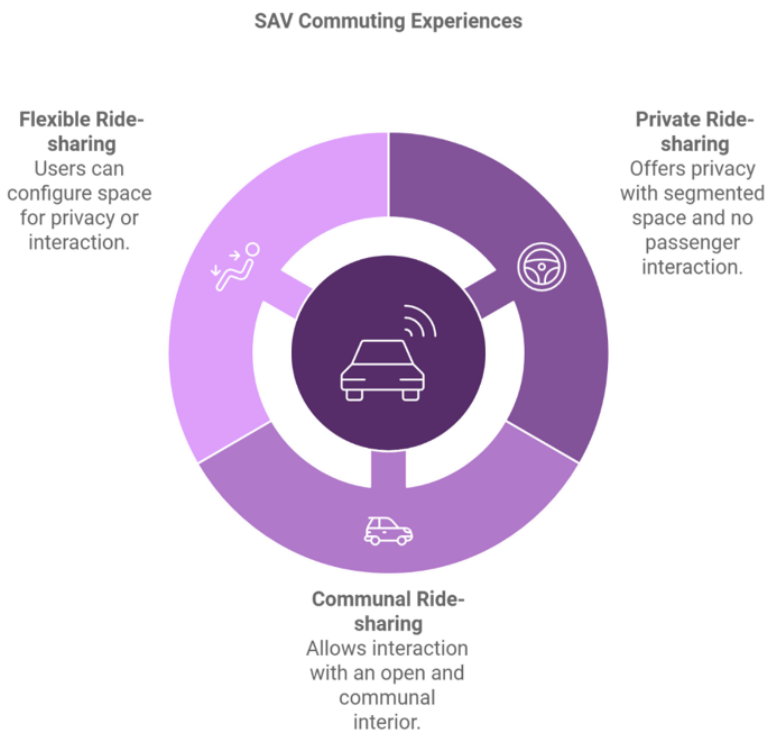

Figure 13: SAV commuting configurations derived from the four-quadrant conceptual model

4.5. Method

Two surveys (N = 124 and N = 351) with British drivers were conducted in the United Kingdom. Surveys were used in this study because they allow for the efficient collection of quantitative data from a large sample of participants, enabling the researchers to measure attitudes, perceptions, and behavioural intentions towards the

virtual SAVs presented in the different use case scenarios. This study collected quantitative data through three questionnaire instruments administered during each survey. It involved creating virtual SAVs for three use cases; Private ride-sharing (PRS), Communal ride-sharing (CRS) and Flexible ride-sharing (FRS). Data was collected from respondents through self-reporting after participants are exposed to visual and auditory stimuli through videos, in the form of typical trips. These videos stimulated participants by allowing them to freely look around the scenarios during the trips through the use of an animated camera.

4.5.1. Target Participants and recruitment

One hundred and twenty (120) participants who met the study requirements were recruited primarily through social media (specifically the 'Leedsface' Facebook group, with permission from the group's administrator), and through a study participant recruitment website; callforparticipants.com. Study volunteers were directed to an online form to assess their eligibility to take part. To avoid cross-cultural effects, the target participants had to be British nationals, or to have lived in Britain for at least five years. Further filtering ensured only participants who met the following criteria were recruited:

- above the age of 18, who are
- non-experts in the research topic
- own and/or use a car on at least a weekly basis
- must have used ridesharing or carsharing services such as Uber at least once in the 12 months before the study
- must have access to a computer or tablet with internet to participate online

Convenience sampling was used in this study. "Convenience sampling is a non-probability sampling technique where subjects are selected because of their convenient accessibility and proximity to the researcher" (Creswell, 2014, p. 158). The sample size is based on the analysis method (see 4.5.5. Data Analysis); According to Hair et al. (2011), the minimum sample size for PLS-SEM should be equal to the larger of the following:

- ten times the largest number of formative indicators used to measure one construct, or
- ten times the largest number of structural paths directed at a particular latent construct in the structural model

Since the research model is reflective instead of formative, the first approximation method does not apply to this study. Therefore, using the second approximation method, and based on the largest number of structural paths directed at Behavioural Intention (see 4.5.4.1. Research Model, Study Variables), the minimum sample size is calculated as 9 x 10 = 90. To account for participants who might drop out, or to account for incomplete data, an additional forty (40) participants were recruited.

4.5.2. Treatment Scenarios

Future SAVs may vary in significant ways from previous travel experiences, and there is need to overcome challenges of visualising future automated modes as stimuli for participants. All scenarios in this study use the concept autonomous car by Dosch Design (see Figure 14), modified to have four doors instead of only two; depending on the scenario requirements.

The following conditions were present in each scenario:

- no steering wheel
- no individual car ownership
- configurable seating direction
- one co-passenger is a stranger
- one co-passenger is someone the participant knows
- a single trip during day

Figure 14: Modified Dosch Design Concept Autonomous Car

4.5.2.1. Segmented ride-sharing

The scenarios are built around the concept of segmented interiors within ride-sharing. Segmented ride-sharing limits the interaction between passengers by providing safe and private compartments to each individual passenger. According to Ong et al. (2019), a segmented interior increases feeling of privacy. However, they identified a number of positive and negative aspects of segmented ride-sharing. These are:

Positives

- Quiet environment to get work done
- Personal space without being disturbed by others
- Prevent awkward situations where the user does not want to talk to others sharing the ride

Negatives

- Safety concerns, due to not being able to see the driver or situate oneself on the road
- Feeling of awkwardness caused by not knowing whether there is someone sitting next to you
- Lack of windows creating a claustrophobic feeling.

The positive aspects were adopted into these scenarios, with the negative aspects addressed by using transparent partitions (see Figure 15) instead of opaque partitions as used in the study by Ong et al. (2019). Ong et al. (2019) also found that a screen showing the front of the environment increases situational awareness, but also increases motion sickness, and is not sufficient enough to address safety concerns and the feeling of claustrophobia. For these reasons, interior screens were left out of the scenarios. The three different scenarios are briefly explained below, with screenshots showing the views from the participants' perspective.

4.5.2.2. Scenario 1: Private Ride-Sharing (PRS)

In this use case scenario, the emphasis is on privacy for each individual passenger within a ride-share self driving car; without allowing interaction between passengers.

Individual passengers have privacy within their own compartment. Personal and intimate space is isolated for each passenger with a physical barrier or partition.

Figure 15: Participant view within Private Ride-sharing (PRS), with virtual passengers

4.5.2.3. Scenario 2: Communal Ride-Sharing (CRS)

CRS is the opposite of PRS. Passengers can share an open and communal space within the SAV with acquaintances and strangers, and can freely communicate with each other if they wish to, due to the open space. This is similar to early SAV prototypes (shuttles) used in other studies (Madigan et al., 2016; Nordhoff et al., 2017), but in this case, the seating is limited to a maximum of four.

Figure 16: Participant view within Communal Ride-sharing, with virtual passengers

4.5.2.4. Scenario 3: Flexible Ride-Sharing (FRS)

In FRS, the interior is configurable, with one state that the user can manipulate; partition privacy. The user can open or close a window-like portion of the partition to promote or discourage social interactions. This works through a request-acceptance

system in which one passenger initiates the request to open the windows, and the neighbouring passenger accepts.

Figure 17: Participant view within Flexible Ride-sharing, with virtual passengers

4.5.3. Procedure

Participants took three virtual trips in the three different types of SAVs. A trip in this study is defined as a one-way course of travel having a single main purpose from the participant's perspective. Figure 18, Figure 19 and Figure 20 show the trip, with the numbers indicating pick-up stops, as other passengers are being picked up along the route during each trip. The numbers (1 and 2) indicate pick-up of the participant, and the letter (P) indicates pick-up of the virtual passenger. The maximum number of pick-ups, as currently defined by UberPOOL, is two. However, for this study, only one pick-up took place during the trip, with the first pickup assumed to have taken place before the participant enters the SAV, as there was already a virtual passenger in the SAV. Each scenario began with the participant waiting to be picked-up from home and ended after the participant was dropped off at work (Figure 18).

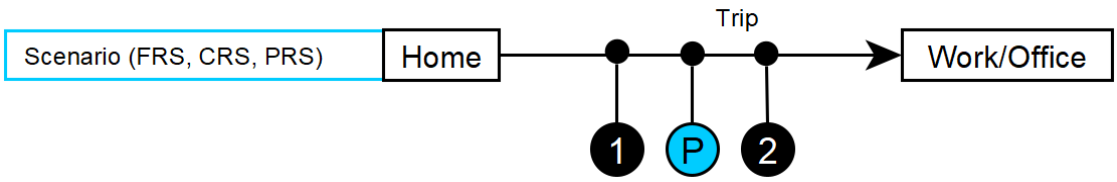

Figure 18: Example trip for each use case

Figure 20 shows the travel route that the virtual SAV took with the participant as a passenger. The red path on the route was fully visualised in the scenarios, with the thicker blue line parts of the trip skipped by dipping the scene to black then emerging at the next start of the visible part of the trip. This was done to reduce the treatment time for participants. The total length of each scenario trip was 2 minutes 30 seconds.

Figure 19: Snapshots from the scenario trip (FRS)

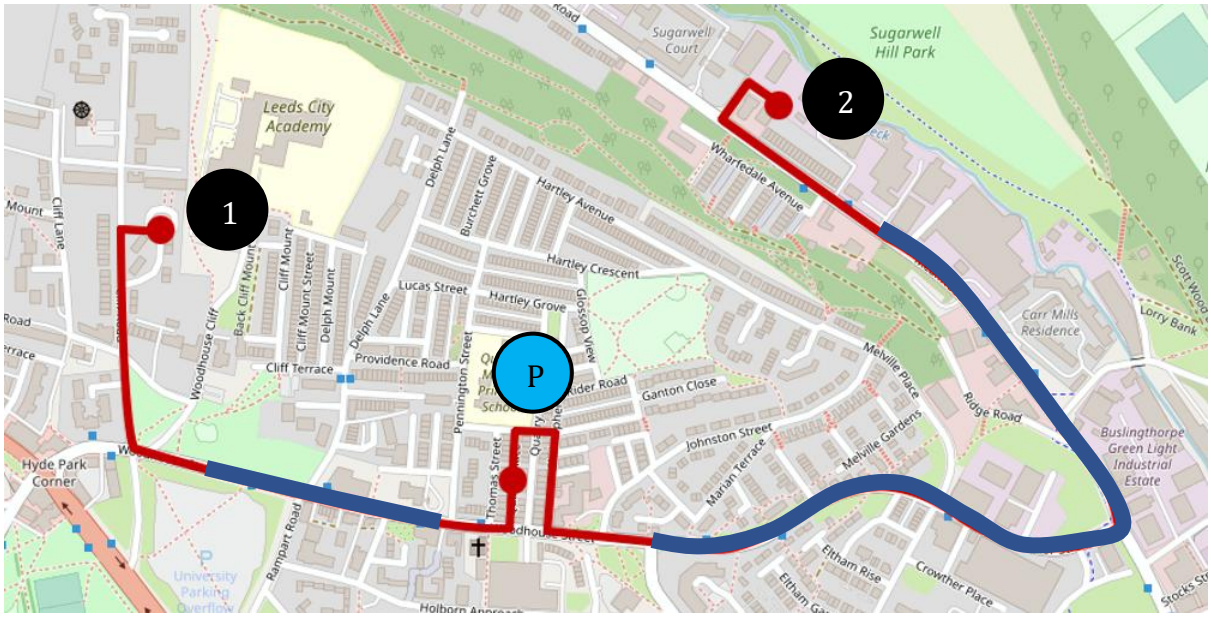

Figure 20: Scenarios travel route - trip

Figure 21 shows the experimental procedure, which each participant going through the three use cases. After each use case, participants responded to the Misery

Scale (Emmerik et al., 2011) to check if there are any Virtual Reality Induced Side Effects (VRISE) before responding to the post-treatment questions. This was on a 10-point scale to measure comfort level. If the VRISE score was acceptable, i.e. 7 or more, then participants could respond to the questionnaire items. Participants with a Misery Scale score less than 7 were automatically withdrawn from further participation in the experiment. After completing all scenarios, the iGroup Presence Questionnaire (Schubert et al., 2001) was applied. IPQ is a self-report questionnaire designed to assess the sensation of presence experienced in virtual environments. It has fourteen items, each of which is evaluated on a seven-point Likert scale from 0 to 6.

During the study, a within-subjects experimental procedure was applied. Within-subjects has been shown to have greater statistical power (for a sample of 20 to 218 subjects) than between-subjects, which requires 4 to 8 times more subjects (Bellemare et al., 2014). To reduce order effects, counterbalancing was applied through six groups as part of the experimental procedure, with 120 participants (3x2x1). Participants were randomly assigned to one of six groups.

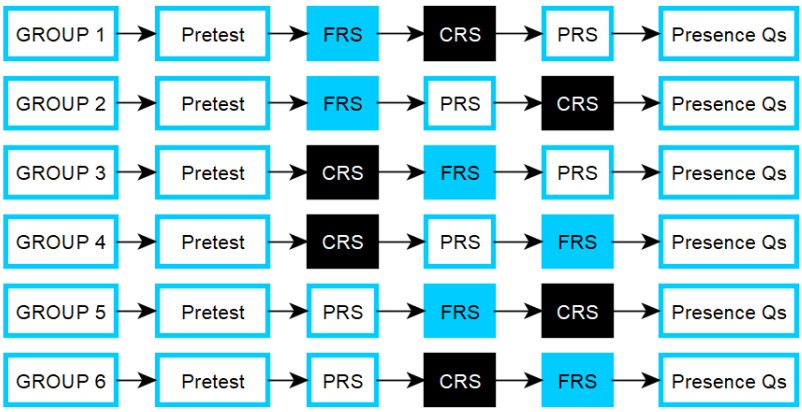

Figure 21: Counterbalanced repeated measures

4.5.4. Instrument

The data collection instrument was in the form of an online survey, with questionnaire items developed from the Extended Unified Theory of Acceptance and Use of Technology (UTAUT2) and the new extended model predictors.

4.5.4.1. Research Model, Study Variables and Questionnaire Items

A modified version of UTAUT2 was used as the research model to evaluate acceptance of SAVs; which is made up of latent and observed variables (See Figure 22 for the research model). Latent variables are theoretical constructs that are not directly measured, and are commonly described as unobserved variables. They can either be exogenous (i.e., independent), or endogenous (i.e., dependent) variables. The seven latent exogenous variables in the measurement model are Performance Expectancy (PE), Effort Expectancy (EE), Social Influence (SI), Facilitating Conditions (FC), Habit (HA), Trust (TR) and Service Quality (SQ).

Latent variables are indirectly measured by observed variables that are directly measured through the use of questionnaire items (see Table 12: Measurement of study variables). In order to collect data for the indicators (observed variables) of each latent construct (unobserved variable), questionnaire items were needed, which used an ordinal scale. A commonly used scale is the Likert Scale that ranks the ordinal data from totally disagree to totally agree.

The use of Likert scales in user acceptance research presents a variety of advantages and disadvantages that researchers must consider. The advantages of Likert scales are significant and often outweigh their drawbacks, making them a popular choice

for measuring attitudes, perceptions, and behaviours in various fields, including social sciences and technology acceptance.

One of the primary advantages of Likert scales is their simplicity and ease of use. They allow respondents to express their level of agreement or disagreement on a symmetric agree-disagree scale for a series of statements, which makes the data collection process straightforward and efficient (Ho, 2016). This format is familiar to most respondents, reducing the cognitive load associated with answering survey questions (Yin and Hai-ying, 2023). Furthermore, Likert scales can generate reliable data that can be easily analysed statistically, allowing researchers to draw meaningful conclusions from the results (Aybek and Toraman, 2022). The ability to quantify subjective opinions into numerical data facilitates the application of various statistical methods, enhancing the robustness of the research findings.

However, there are notable disadvantages associated with Likert scales. One significant concern is that they produce ordinal data, which may not accurately represent the intervals between responses. This limitation can complicate the application of certain statistical analyses that assume interval-level data (Vu and Nguyen, 2021). Additionally, respondents may exhibit response biases, such as central tendency bias, where they avoid extreme categories, or social desirability bias, where they provide answers they believe are more socially acceptable (Subhiksa and Purba, 2021). These biases can distort the true attitudes of respondents and affect the validity of the findings.

As with similar previous studies, a seven-point Likert Scale was used to indicate the level of agreement with the statements for the questionnaire items. 7-point Likert items provide a more accurate measure of a participant's true evaluation and are more

appropriate for electronically-distributed and unsupervised usability questionnaires (Finstad, 2010). A review of 60 papers found that scales with an odd number of responses, particularly those with more than five points (like a 7-point scale), are most effective in terms of reliability and validity. This makes the 7-point scale a preferred choice for achieving credible research results (Kusmaryono and Wijayanti, 2022).

Table 12: Measurement of study variables

Construct	**Items**	**Source (adapted from)**
Performance Expectancy (PE)	PE1: I would find this type of shared automated vehicle useful in my daily life.	Venkatesh et al. (2012) Madigan et al. (2016)
	PE2: Using this type of shared automated vehicle would help me accomplish things more quickly.	
	PE3: I think this type of shared automated vehicle will become an important part of the existing public transport system.	
Effort Expectancy (EE)	EE1: I think this type of shared automated vehicle would be easy to understand and use.	Venkatesh et al. (2012) Madigan et al. (2016) Nordhoff et al. (2020a)
	EE2: It would not take me long to learn how to use this type of shared automated vehicle.	
	EE3: I expect this type of shared automated vehicle will be easy for me to use.	
Social Influence (SI)	SI1: The people around me think I should use this type of shared automated vehicle.	Venkatesh et al. (2012) Madigan et al. (2016)
	SI2: I think I am more likely to use this type of shared automated vehicle if my friends and family used it.	
	SI3: People whose opinion I value will prefer that I use this type of shared automated vehicle.	
Facilitating Conditions (FC)	FC1: I have the resources necessary to use this type of shared automated vehicle. FC2: I have the knowledge necessary to use this type of shared automated vehicle. FC3: This type of shared automated vehicle is compatible with other travel modes I use.	Venkatesh et al. (2012)
Hedonic Motivation (HM)	HM1: Using this type of shared automated vehicle would be fun.	Venkatesh et al. (2012) Nordhoff et al. (2020a)
	HM2: Using this type of shared automated vehicle would be enjoyable.	
	HM3: Using this type of shared automated vehicle would be very entertaining.	

Construct	**Items**	**Source (adapted from)**
Habit (HA)	HA1: The use of this type of shared automated vehicle might become a habit for me.	Venkatesh et al. (2012)
	HA2: I could become dependent on using this type of shared automated vehicle.	
	HA3: I must use this type of shared automated vehicle.	
Price Value (PV)	PV1: This type of shared automated vehicle is reasonably priced.	Venkatesh et al. (2012)
	PV2: This type of shared automated vehicle is good value for me.	
	PV3: At the current price, this type of shared automated vehicle	
Trust (TR)	TR1: I trust that this type of shared automated vehicle will have enough safeguards to make me feel comfortable using it.	Venkatesh et al. (2012) Kaur and Rampersad (2018)
	TR2: I feel safe using this type of shared automated vehicle.	
	TR3: I prefer this type of shared automated vehicle without a supervisor.	
	TR4: An opportunity to try this type of shared automated vehicle in a safe environment would make me trust it more.	
	TR5: I believe there are few risks in using this type of shared automated vehicle.	
	TR6: I would feel secure when using this type of shared automated vehicle.	
	TR7: I would feel comfortable using this type of shared automated vehicle with other passengers.	
Service Quality (SQ)	SQ1: If readily available, I would use this type of shared automated vehicle.	Nordhoff et al. (2019)
	SQ2: I would feel relaxed when using this type of shared automated vehicle.	
	SQ3: Using this type of shared automated vehicle would be convenient.	
	SQ4: I believe this type of shared automated vehicle would give me some degree of flexibility in my trips.	
	SQ5: I believe this type of shared automated vehicle would be reliable.	
	SQ6: The space in this type of shared automated vehicle is good for sharing with strangers.	
	SQ7: The space in this type of shared automated vehicle is good for sharing with friends/colleagues.	
Behavioural Intention (BI)	BI1: I intend to use this type of shared automated vehicle for my travels in the future.	Venkatesh et al. (2012)
	BI2: I would always try to use this type of shared automated vehicle in my daily life when available in the future.	
	BI3: I plan to use this type of shared automated vehicle when available in the future	

The thirty-eight observed endogenous variables are listed in Table 13 instead of being enumerated here. The latent endogenous variables are Price Value (PV), Hedonic Motivation (HM) and Behavioural Intention (BI). The independent variables are the three uses cases; Private Ride-sharing (PRS), Communal Ride-Sharing (CRS), and Flexible Ride-Sharing (FRS). These were used to create the three scenarios in the form of three monoscopic videos that were used as stimuli in this study. The discussion of the results on the differences between these three use cases in under 4.6.3.

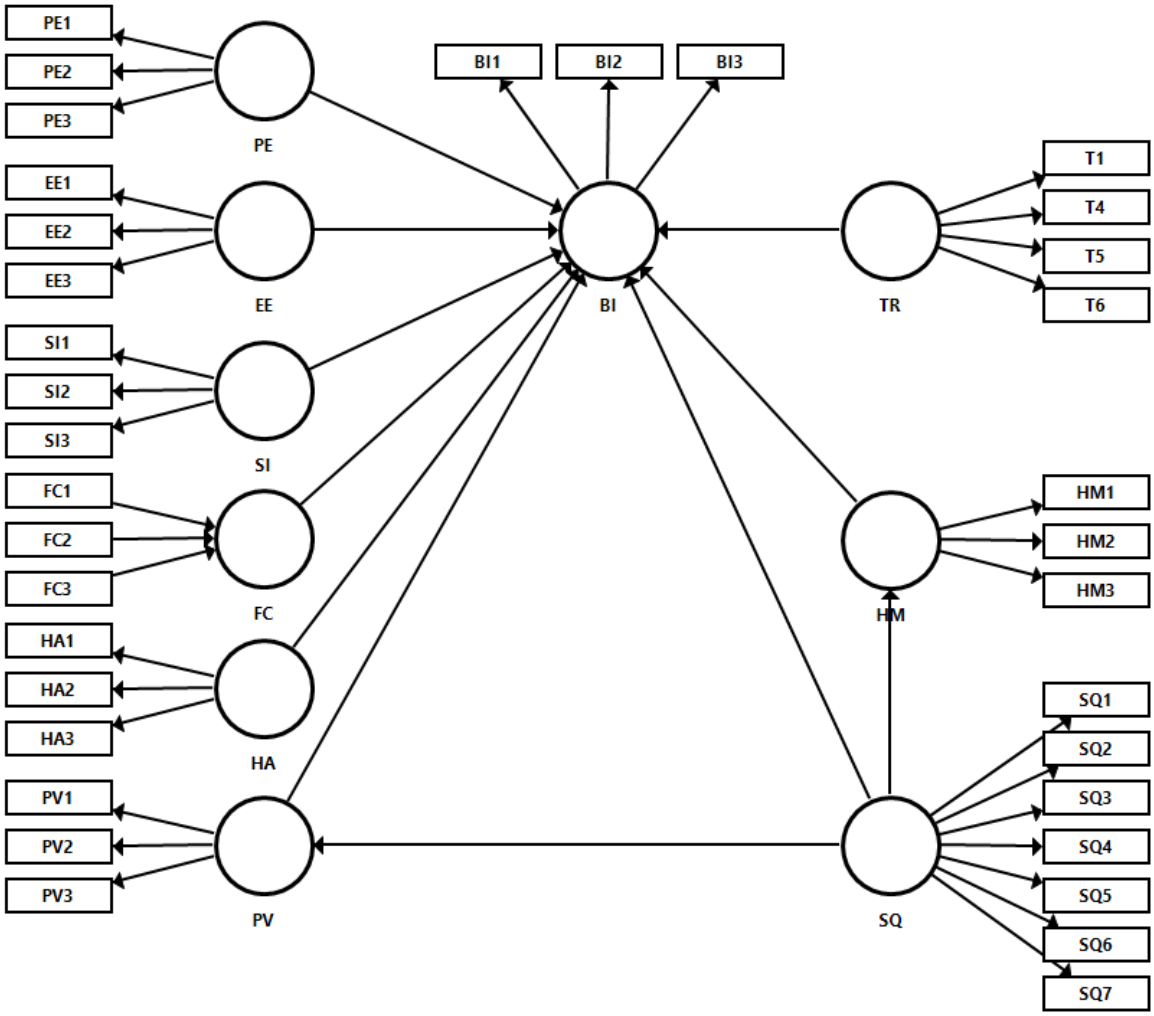

Figure 22: Research Model (Dichabeng et al., 2021) used as the PLS-SEM model for results analysis, in SmartPLS

Table 13: Study variables

Measured/Observed, endogenous variables (Indicators) = 37	**Latent/Unobserved, endogenous variables (Dependent Constructs) = 3**	**Latent/Unobserved, exogenous variables (Independent Constructs) = 7**	**Source**
PE1, PE2, PE3		PE	UTAUT2
EE1, EE2, EE3		EE	UTAUT2
SI1, SI2, SI3		SI	UTAUT2
FC1, FC2, FC3		FC	UTAUT2
HA1, HA2, HA3		HA	UTAUT2
PV1, PV2, PV3	PV		UTAUT2
HM1, HM2, HM3	HM		UTAUT2
TR1, TR2, TR3, TR4, TR5, TR6, TR7		TR	Newly Added
SQ1, SQ2, SQ3, SQ4, SQ5, SQ6, SQ7		SQ	Newly Added
BI1, BI2, BI3	BI		UTAUT2

4.5.4.2. Hypotheses

Based on the relationships defined in the research model shown in Figure 22, thirteen hypotheses were derived. These hypotheses are specific to Study 2 only and are therefore different to the overall thesis hypotheses:

H1. Performance Expectancy (PE) positively influences the Behavioural Intention (BI) of users in Shared Automated Vehicles (SAVs)

H2. Effort Expectancy (EE) positively influences the Behavioural Intention (BI) of users in Shared Automated Vehicles (SAVs)

H3. Social Influence (SI) positively influences the Behavioural Intention (BI) of users in Shared Automated Vehicles (SAVs)

H4. Facilitating Conditions (FC) positively influences the Behavioural Intention (BI) of users in Shared Automated Vehicles (SAVs)

H5. Habit (HA) positively influences the Behavioural Intention (BI) of users in Shared Automated Vehicles (SAVs)

H6. Price Value (PV) positively influences the Behavioural Intention (BI) of users in Shared Automated Vehicles (SAVs)

H7. Hedonic Motivation (HM) positively influences the Behavioural Intention (BI) of users in Shared Automated Vehicles (SAVs)

H8. Trust (TR) positively influences the Behavioural Intention (BI) of users in Shared Automated Vehicles (SAVs)

H9. Service Quality (SQ) positively influences Hedonic Motivation (HM)

H10. Service Quality (SQ) positively influences the Behavioural Intention (BI) of users in Shared Automated Vehicles (SAVs)

H11. Service Quality (SQ) positively influences Price Value (PV)

H12. Service Quality (SQ) positively influences the Behavioural Intention (BI) of users in Shared Automated Vehicles (SAVs) through Hedonic Motivation (HM)

H13. Service Quality (SQ) positively influences the Behavioural Intention (BI) of users in Shared Automated Vehicles (SAVs) through Price Value (HM)

4.5.4.3. Pre-test

Prior to viewing any of the SAV scenario videos (treatments), participants completed a brief pre-test questionnaire section integrated into the online survey flow. This questionnaire specifically aimed to assess participants' initial, pre-existing attitudes towards the concepts of Trust (TR) and Service Quality (SQ) in the anticipated context of shared automated mobility. The items measuring TR and SQ were the same as those used in the main post-treatment assessment (refer to Table 12), but the items were worded slightly differently since they were not referencing any specific scenario. The primary purpose of collecting this pre-treatment data was to establish a baseline understanding of participant attitudes on these key extended constructs before they were potentially

influenced by the experimental stimuli. This also allowed for checks to ensure baseline equivalence across the randomly assigned counterbalancing groups.

Table 14: Pre-test questionnaire items

Construct	Items
Trust (TR)	TR1: I trust that shared automated vehicles will have enough safeguards to make me feel comfortable using it.
	TR2: I feel safe using shared automated vehicles.
	TR3: I prefer shared automated vehicles without a supervisor.
	TR4: An opportunity to try shared automated vehicles in a safe environment would make me trust it more.
	TR5: I believe there are few risks in using shared automated vehicles.
	TR6: I would feel secure when using shared automated vehicles.
	TR7: I would feel comfortable using shared automated vehicles with other passengers.
Service Quality (SQ)	SQ1: If readily available, I would use shared automated vehicles.
	SQ2: I would feel relaxed when using shared automated vehicles.
	SQ3: Using shared automated vehicles would be convenient.
	SQ4: I believe shared automated vehicles would give me some degree of flexibility in my trips.
	SQ5: I believe shared automated vehicles would be reliable.
	SQ6: The space in shared automated vehicle is good for sharing with strangers.
	SQ7: The space in shared automated vehicle is good for sharing with friends/colleagues.

4.5.5. Data Analysis

The collected dataset was entered into and analysed using SmartPLS. Using a Partial Least Squares-Structural Equation Model (PLS-SEM), the influence of indicators on latent variables was analysed (measurement model) by examining their loadings, as well as the influence of constructs on behavioural intention (structural model). Hair et al. (2011) recommend using PLS-SEM under the following conditions that apply to this study:

- If the goal is predicting key target constructs or identifying key “driver” constructs.
- If the research is exploratory or an extension of an existing structural theory

- If the structural model is complex (many constructs and many indicators)
- If the sample size is relatively low
- If latent variable scores need to be used in subsequent analyses

PLS-SEM provides excellent benefits to researchers who are working with SEM, and can deal with difficult modelling problems that typically occur, like extremely complicated models (Hair et al., 2014). There are three steps when applying PLS-SEM, which are:

- Model specification – defining the relationship between latent variables
- Measurement Model Analysis (External model evaluation) - validity testing and reliability testing towards the questionnaire items
- Structural Model Analysis (Inner model evaluation) – hypotheses testing

A one-way Analysis of variance (ANOVA) was used to determine whether there are any statistically significant differences between the means of the independent variables (use cases).

4.6. Results

The results in this study are derived through assessment of the measurement model (outer model) and assessment of the structural model (inner model). This is to determine if the quality criteria for empirical research is met by both the measurement and structural models. SmartPLS was used to assess both models.

Table 15: Round 1 participant information

Gender		**Devices**	
Male	92	Smartphone	57

Female	32	Laptop	49
	124	Desktop	17
Age Groups		Tablet	1
20 - 34 Years	91		124
35 - 49 Years	31	**Screen Size**	
50 - 64 Years	2	Large Screen	67
	124	Small Screen	57
			124

4.6.1. Initial measurement model

The results of the measurement model are briefly discussed below and focus on internal consistency reliability, indicator reliability, convergent validity and discriminant validity. These are further summarised in Table 18. Lastly, the results for the goodness of model fit are presented.

4.6.1.1. Internal consistency reliability

Composite reliability (CR) is used to check if a measurement model has satisfactory internal consistency reliability, by ensuring that each construct exceeds the 0.7 threshold for exploratory research (Sarstedt et al., 2021). The results show that the indicator items sufficiently represent the constructs, with the CR values ranging from 0.864 (SI) to 0.952 as shown in Table 18.

4.6.1.2. Indicator reliability

By examining the indicator item loadings, the indicator reliability of the measurement model can be assessed. For the indicator reliability of the measurement to be satisfactory, all indicator item loading estimates have to be at least 0.708 (Sarstedt et al., 2021). From the analysis results, and with the exception of TR2 (0.567), the indicator

item loadings ranged from 0.718 to 0.943. Therefore, apart from TR2, all the items used in this study had satisfactory indicator reliability.

4.6.1.3. Convergent validity

The average variance extracted (AVE) value is used to assess the measurement model's convergent validity. Satisfactory convergent validity requires the AVE values of constructs to be close to 0.5 or higher (Hair et al., 2014). The AVE values for constructs range from 0.565 to 0.869, which shows that the measurement model had sufficient convergent validity.

4.6.1.4. Discriminant validity

Discriminant validity is a check to see the extent to which a construct is different to other constructs. A measurement model is said to have sufficient discriminant validity if two conditions are met; (1) the correlations between the measure and all other measures do not exceed the square root of the AVE values, and (2) an indicator's loading is higher for its own construct than for all other constructs. Fornell and Larcker's criterion was used to check the first condition, which can be directly assessed in SmartPLS. Table 16 shows the first condition has been met, with the exception of TR-SQ. The second condition was assessed by examining the cross-loadings for all indicators against constructs. The results showed that only TR7 did not satisfy this condition, as it had a higher loading for SQ than for TR.

Table 16: Fornell and Larcker's criterion from SmartPLS

	BI_	**EE**	**FC**	**HA**	**HM**	**PE**	**PV**	**SI**	**SQ**	**TR**
BI_	0.932									
EE	0.578	0.872								
FC	0.735	0.661	0.842							
HA	0.767	0.536	0.679	0.898						

HM	0.784	0.604	0.653	0.793	0.908					
PE	0.788	0.688	0.721	0.705	0.709	0.881				
PV	0.658	0.689	0.644	0.709	0.681	0.634	0.913			
SI	0.750	0.624	0.629	0.751	0.694	0.676	0.687	0.824		
SQ	0.867	0.699	0.722	0.791	0.800	0.779	0.737	0.744	0.856	
TR	0.813	0.674	0.706	0.756	0.753	0.734	0.753	0.741	***0.897**	0.751

A more reliable and modern method for checking discriminant validity is by looking at the Heterotrait-Monotrait Ratio (HTMT), which was first introduced by Henseler et al. (2015). The threshold for HTMT is that the ratio between constructs should be less than 0.9 or less than 0.85 for more strict consideration. Generally, the 0.9 threshold is acceptable, which was used in this study. Only the ratios between SI-HA and SQ-BI showed issues, as shown in Table 17.

Table 17: Heterotrait-Monotrait Ratio (HTMT) results

	BI_	**EE**	**FC**	**HA**	**HM**	**PE**	**PV**	**SI**	**SQ**	**TR**
BI_										
EE	0.641									
FC	0.855	0.805								
HA	0.850	0.616	0.809							
HM	0.861	0.687	0.770	0.895						
PE	0.886	0.798	0.875	0.813	0.812					
PV	0.720	0.788	0.763	0.797	0.759	0.726				
SI	0.886	0.790	0.802	***0.911**	0.840	0.832	0.842			
SQ	***0.930**	0.775	0.835	0.871	0.871	0.868	0.802	0.880		
TR	0.884	0.621	0.775	0.829	0.832	0.794	0.735	0.857	0.893	

4.6.1.5. Resolving measurement model issues

Measurement model issues needed to be resolved before analysis could proceed to the inner model. To revolve reliability issues, TR2 was deleted, and to resolve

discriminant validity issues, TR7 was removed as an indicator. This resulted in TR3 and TR4 showing reliability issues as they fell below the 0.7 threshold and also showed discriminant validity issues. Consequently was TR3 and TR4 were deleted. These changes improved the AVE value for TR from 0.565 to 0.703. Next, SQ1 and SQ2 were deleted to resolve discriminant validity issues between SQ and BI shown in Table 17. The only way to resolve discriminant validity issues between SI and HA was to delete two indicators for the construct HA. This would result in HA having only one indicator, which would not be acceptable as the least number of indicators per construct is three. However, since HA is a construct in UTAUT2 and it's HTMT ratio with SI was close to the 0.9 threshold, it was left in the model at this stage. The resulting measurement model showed no further issues, and was considered ready for testing the structural model.

Table 18: Initial measurement model results, after resolving measurement model issues

Latent Variable	**Indicator**	**Loadings**	**Indicator Reliability** (i.e. Loadings^2)	**Cronbach's Alpha**	**rho_A**	**Composite Reliability** (CR)	**Average Variance Extracted** (AVE)
Behavioural Intention (BI)				0.925	0.926	0.952	0.869
	BI1	0.917	0.841				
	BI2	0.943	0.889				
	BI3	0.937	0.878				
Effort Expectancy (EE)				0.844	0.864	0.905	0.761
	EE1	0.884	0.781				
	EE2	0.88	0.774				
	EE3	0.852	0.726				
Facilitating Conditions (FC)				0.794	0.794	0.879	0.708
	FC1	0.819	0.671				
	FC2	0.879	0.773				
	FC3	0.825	0.681				
Habit (HA)				0.880	0.888	0.926	0.806
	HA1	0.891	0.794				
	HA2	0.933	0.870				
	HA3	0.868	0.753				
Hedonic Motivation (HM)				0.894	0.895	0.934	0.825
	HM1	0.907	0.823				
	HM2	0.912	0.832				
	HM3	0.906	0.821				
Performance Expectancy (PE)				0.854	0.859	0.912	0.776
	PE1	0.91	0.828				

	PE2	0.908	0.824				
	PE3	0.822	0.676				
Price Value (PV)				0.900	0.902	0.938	0.834
	PV1	0.928	0.861				
	PV2	0.912	0.832				
	PV3	0.899	0.808				
Social Influence (SI)				0.764	0.777	0.864	0.679
	SI1	0.847	0.717				
	SI2	0.767	0.588				
	SI3	0.855	0.731				
Service Quality (SQ)				0.922	0.922	0.941	0.763
	SQ3	0.873	0.762				
	SQ4	0.874	0.764				
	SQ5	0.885	0.783				
	SQ6	0.851	0.724				
	SQ7	0.882	0.778				
Trust (TR)				0.838	0.844	0.902	0.755
	TR1	0.886	0.785				
	TR5	0.842	0.709				
	TR6	0.877	0.769				

4.6.1.6. Goodness of model fit

The Standardised Root Mean Squared Residual (SRMR) value is less than 0.08 for the estimated model, which indicates a good model fit (Hu, L.-t. and Bentler, 1998). The fit statistics results for the research model are summarised in Table 19; showing the results before and after resolving the measurement issues. The final SRMR value for the estimated model was 0.078.

Table 19: Model fit results

	Before resolving measurement issues		**After resolving measurement issues**	
	Saturated Model	Estimated Model	Saturated Model	Estimated Model
SRMR	0.066	0.075	0.059	0.078
d_ULS	3.262	4.183	1.829	3.206
d_G	2.181	2.313	1.37	1.513
Chi-Square	1396.756	1444.147	923.334	973.462
NFI	0.717	0.707	0.764	0.751

4.6.2. Initial structural model

Lateral collinearity issues were examined before testing the hypotheses, by looking at the Variance Inflation Factor (VIF) for each indicator. VIF values ranged from

1.441 to 4.164, suggesting that lateral collinearity issues were not a concern for this study as these were all less than 5 (Hair et al., 2014). According to Hair et al. (2014), the structural model would be deemed satisfactory if the following two criteria are met:

- The coefficient of determination (R Square) value is larger than 0.19 for each dependent construct (PV, HM and BI, as previously shown in Table 13). This was true for all dependent constructs from the onset.
- Path coefficients between Latent Variables are at least 0.1 and are significant (with a P-Value not greater than 0.05).

4.6.2.1. Initial hypotheses testing

A standard bootstrapping procedure was performed; with 1000 subsamples, one-tailed test type, and a 0.05 significance level for the path coefficients to be supported. The structural model path coefficients (direct and in-direct effects) were used to test and confirm the hypotheses, as shown in Table 20 (See Section 4.5.4.2.). For direct effects, the results showed that H5, H6 and H7 are not supported; with H1 to H4 and H8 to H11 supported. From the path coefficients, it can be concluded that Service Quality (SQ) is the strongest predictor of Behavioural Intention (BI), and further has a very strong effect on both Hedonic Motivation (HM) and Price Value (PV). In terms of indirect effects, the impact of SQ on BI does not pass through HM nor PV as the results are insignificant (i.e. P-Value > 0.05). Therefore H12 and H13 are also not supported.

Table 20: Initial hypotheses testing results

Hypotheses	Variables	Path Coefficient	P-Value	T-Statistics	Result
H1	PE – BI	0.253	0.015	2.169	Supported
H2	EE – BI	-0.200	0.006	2.497	Supported
H3	SI – BI	0.187	0.016	2.143	Supported
H4	FC – BI	0.175	0.021	2.040	Supported

H5	HA – BI	**-0.014**	**0.432**	0.171	Not Supported
H6	PV – BI	**-0.058**	**0.217**	0.783	Not Supported
H7	HM – BI	0.164	**0.070**	1.476	Not Supported
H8	TR – BI	0.150	0.019	2.073	Supported
H9	SQ – HM	0.768	0.000	13.249	Supported
H10	SQ – BI	0.338	0.013	2.217	Supported
H11	SQ – PV	0.750	0.000	12.094	Supported
H12	SQ – HM – BI	0.126	**0.068**	1.489	Not Supported
H13	SQ – PV – BI	**-0.043**	**0.219**	0.777	Not Supported

*. P-Value is significant at the .05 level.

4.6.2.2. Revising the structural model

While the results showed that H5, H6 and H7 are not supported, the factors HA, PV and HM are part of the UTAUT2 model and therefore required further investigation. By examining H7 (HM – BI) and H9 (SQ – HM), it was clear that HM had a direct effect on BI but the effect was not significant. However, SQ had a very strong effect on HM. This raised the question of whether HA, PV and HM would have a strong effect on SQ, and an indirect effect on BI in the presence of SQ. To test this, the structural model was modified to introduce additional hypotheses; H14 (HA – SQ – BI), H15 (PV – SQ – BI) and H16 (HM – SQ – BI), as shown in Figure 23. Consequently, H9 became reversed; i.e. from SQ – HM to HM – SQ. Similarly, H11 was also reversed. This also introduced H17 (HA – SQ). Unsupported hypotheses were removed from the model at this stage.

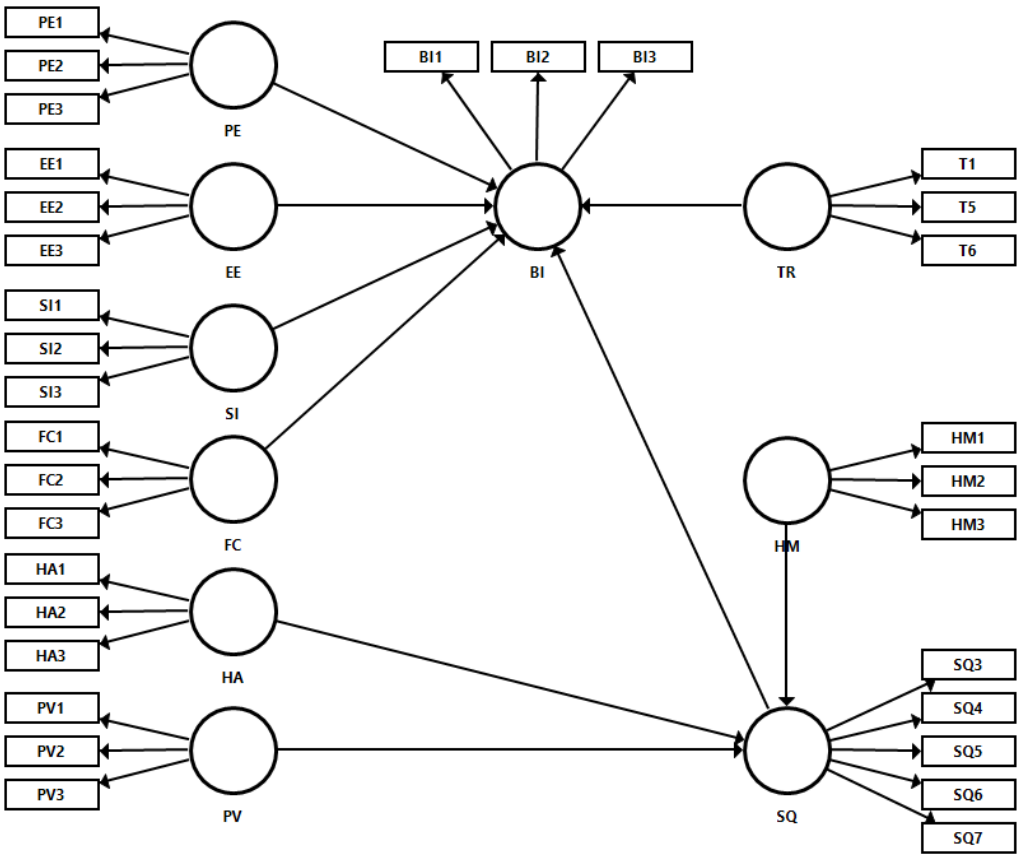

Figure 23: Revised structural model

4.6.2.3. Revised structural model hypotheses testing

The same bootstrapping test was run on the revised structural model, and the results are summarised in Table 21. The revised structural model results showed that H14, H15, and H16 were all supported, as their P-Values were significant and their path coefficients were greater than 0.1. This showed a clear indirect effect of PV and HM on BI through SQ; indicating complete mediation by SQ on these latent factors (PV, HM). Complete mediation is when the direct effect is insignificant and the indirect effect is significant (Hair et al., 2014). However, this was not the case for HA, which showed no indirect effect on BI through SQ. The results also showed that H17 was supported (HA – SQ), but the total effect size of HA on BI was not significant. Because of this, HA was removed from the final model. These results are summarised in Table 21. By removing

all unsupported paths, a final structural model was arrived at, shown in Figure 24. This final model satisfied all the criteria set out under 4.6.2. for the structural model.

Table 21: Revised structural model hypotheses testing results

Hypotheses	Variables	Path Coefficient	P-Value	T-Statistics	Result
H1	PE – BI	0.282	0.003	2.743	Supported
H2	EE - BI	-0.211	0.007	2.477	Supported
H3	SI – BI	0.196	0.010	2.325	Supported
H4	FC – BI	0.178	0.009	2.367	Supported
H5					Removed
H6					Removed
H7					Removed
H8	TR – BI	0.177	0.005	2.573	Supported
H9	HM - SQ	0.339	0.003	2.718	Supported
H10	SQ – BI	0.368	0.005	2.552	Supported
H11	PV - SQ	0.348	0.000	3.639	Supported
H12					Removed
H13					Removed
H14	HA - SQ - BI	**0.089**	**0.066**	1.510	Not Supported
H15	PV - SQ - BI	0.128	0.018	2.098	Supported
H16	HM - SQ -BI	0.125	0.035	1.809	Supported
H17	HA - SQ	0.241	0.002	2.850	Supported

*. P-Value is significant at the .05 level.

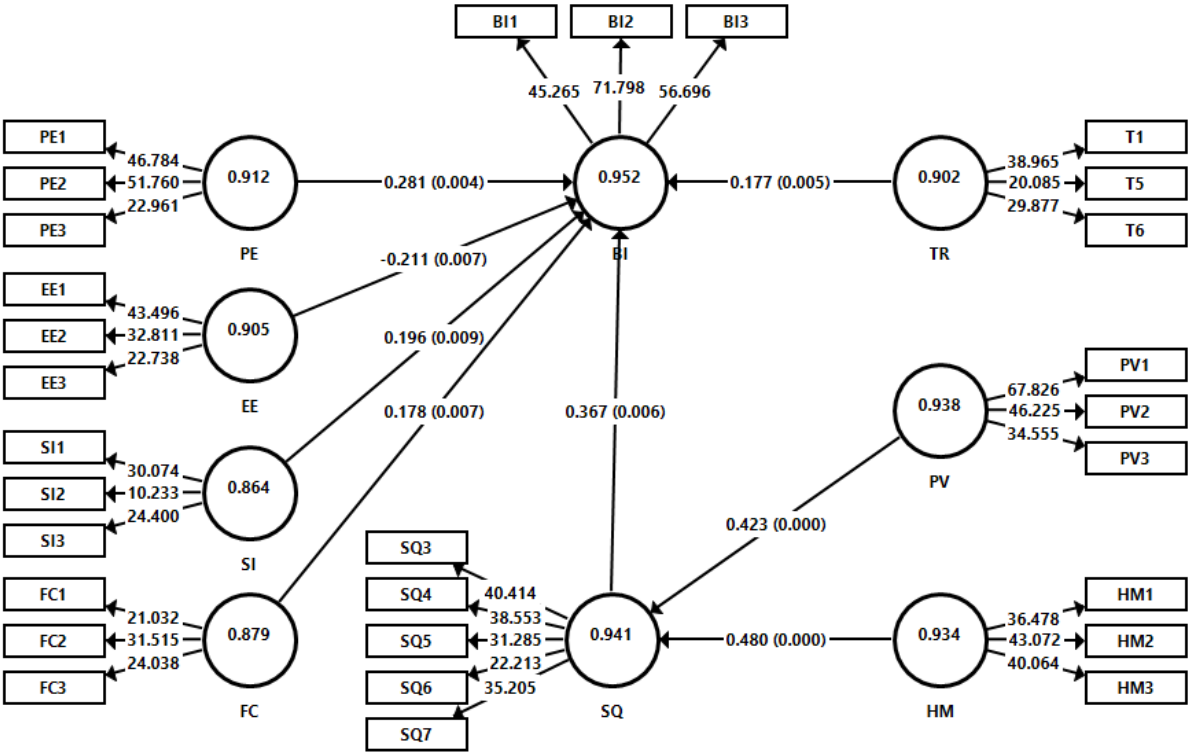

Figure 24: Final structural model

4.6.3. Scenario Differences

A repeated measures ANOVA was used to further analyse the data. This method tests for differences in the means of each scenario while accounting for the within-subjects factor through pairwise comparisons. The results of the pairwise comparisons (See Table 22) provide important insights into the distinct impacts of the three scenarios (FRS, CRS, PRS) on participants' perceptions, independent of the order in which they were presented, as counterbalancing was employed to mitigate order effects. With six groups and random assignment, the observed differences reflect the intrinsic characteristics of each scenario rather than sequential or temporal influences.

A statistically significant difference was observed between the FRS and CRS conditions (p=0.006), with FRS eliciting higher scores on average. This suggests that the FRS scenario consistently fostered greater trust and perceptions of service quality

compared to CRS. The results imply that the FRS scenario included features that positively influenced participants' attitudes, while CRS may have contained elements that participants perceived less favourably. Importantly, because counterbalancing was applied, this difference cannot be interpreted as a temporal decline from FRS to CRS but rather as a scenario-specific effect that occurred regardless of the order in which participants encountered the scenarios.

The comparison between FRS and PRS revealed no statistically significant difference ($p=0.154$), indicating that, on average, PRS elicited scores similar to FRS across all groups. This suggests that PRS had a neutral effect relative to the positive perceptions fostered by FRS. Similarly, the non-significant difference between CRS and PRS ($p=0.950$ indicates that PRS elicited perceptions comparable to CRS, further reinforcing the idea that PRS did not strongly enhance or diminish perceptions when compared to the other two scenarios.

These findings, taken together, indicate that the scenarios had distinct and consistent impacts on participants' perceptions, irrespective of the order of presentation. The FRS scenario appeared to elicit the most favourable responses, while CRS consistently resulted in lower scores. PRS, in contrast, demonstrated a neutral or stabilising effect, with scores comparable to both CRS and FRS. The application of counterbalancing ensures that these differences are attributable to the unique content and characteristics of each scenario, rather than the sequence in which they were presented.

This analysis underscores the need to investigate the specific features of the FRS and CRS scenarios that contributed to the observed differences. For instance,

understanding which elements of FRS enhanced trust or service quality and which aspects of CRS diminished these perceptions could provide valuable insights for future design and implementation of SAV systems. Furthermore, the neutral impact of PRS suggests that it did not introduce strong influences, either positive or negative, on participants' attitudes. This neutrality could be explored further to determine whether it represents a missed opportunity for positively influencing perceptions or an intentional stabilising effect.

Table 22: Repeated Measures ANOVA - Pairwise Comparisons

(I) Scenarios	**(J) Scenarios**	**Mean Difference (I-J)**	**Std. Error**	**Sig.[b]**	**95% Confidence Interval for Difference[b]**	
					Lower Bound	Lower Bound
Pre-Test	FRS	-.211*	.063	.006	-.379	-.044
	CRS	-.002	.060	1.000	-.163	.158
	PRS	-.091	.068	1.000	-.270	.089
FRS	Pre-Test	.211*	.063	.006	.044	.379
	CRS	.209*	.063	.006	.043	.375
	PRS	.121	.054	.154	-.022	.264
CRS	Pre-Test	.002	.060	1.000	-.158	.163
	FRS	-.209*	.063	.006	-.375	-.043
	PRS	-.088	.062	.950	-.254	.077
PRS	Pre-Test	.091	.068	1.000	-.089	.270
	FRS	-.121	.054	.154	-.264	.022
	CRS	.088	.062	.950	-.077	.254

Based on estimated marginal means

*. The mean difference is significant at the .05 level.

b. Adjustment for multiple comparisons: Bonferroni.

Figure 25 presents the estimated marginal means for the key constructs of Service Quality and Trust across the different experimental conditions: the pre-test baseline and the three distinct SAV interior scenarios (FRS, CRS, and PRS). The plot shows the impact of exposure to the simulated SAV environments on participant perceptions. Notably, for both Service Quality and Trust, the mean scores generally

increased from the pre-test level upon exposure to the FRS and PRS scenarios, while the CRS scenario showed a less positive, or even slightly negative, impact compared to the pre-test, particularly for Trust.

Figure 25 reinforces the statistical findings from the repeated measures ANOVA (Table 22). The Flexible Ride-Sharing (FRS) scenario consistently yielded the highest mean scores for both Service Quality (5.45) and Trust (5.40), suggesting this configuration was perceived most favourably by participants. In contrast, the CRS scenario resulted in the lowest average Trust score (5.06) and a lower Service Quality score (5.38) compared to FRS. The PRS scenario resulted in intermediate scores, statistically similar to both FRS and CRS according to the pairwise comparisons. The visual gap between FRS and CRS, particularly evident for the Trust construct, aligns with the significant difference identified in the ANOVA, underscoring the potentially negative perception associated with the purely communal interior compared to the adaptable FRS design. This result highlights the differential impact of SAV interior design concepts on core acceptance factors, with the flexibility offered by FRS appearing to generate the most positive perceptions of both service quality and trust among the participants.

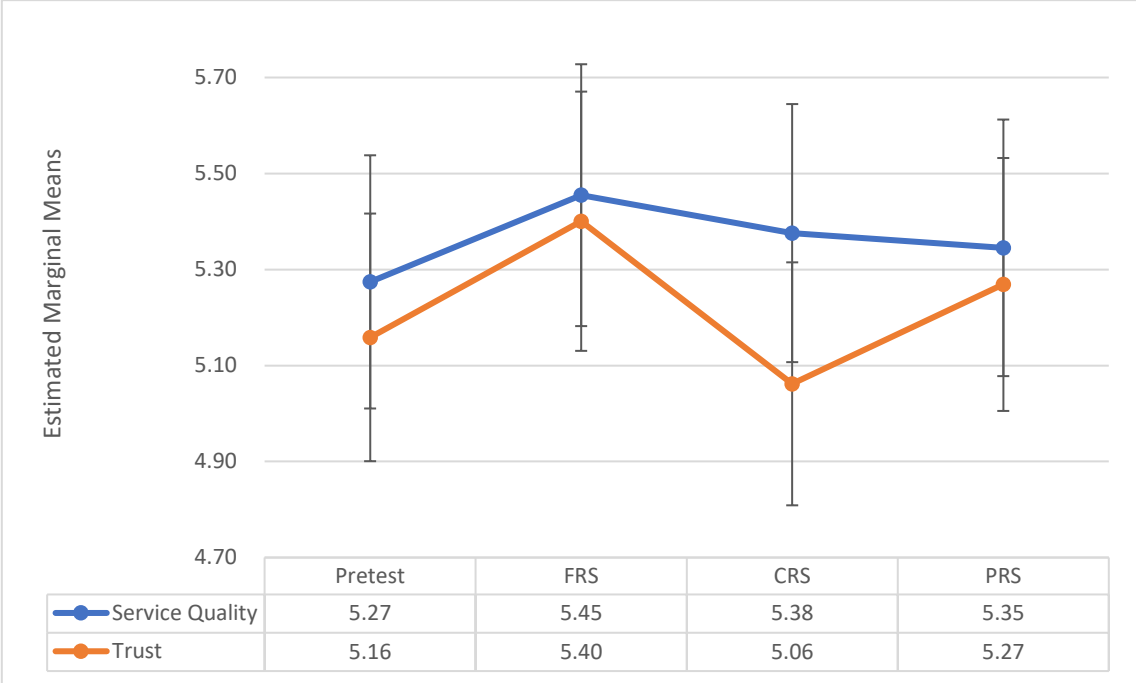

Figure 25: Estimated Marginal Means

4.6.4. Final measurement model

The results of the revised measurement model, with the second dataset, are briefly discussed below and also focus on internal consistency reliability, indicator reliability, convergent validity and discriminant validity. These are further summarised in Table 18. Lastly, as before, the results for the goodness of model fit are also presented.

4.6.4.1. Internal consistency reliability

The composite reliability (CR) of the outer model was assessed and the results again showed that the indicator items sufficiently represent the constructs, with the CR values ranging from 0.881 to 0.933; well above the 0.7 threshold for exploratory research.

4.6.4.2. Indicator reliability

The item loadings were all above the 0.708 threshold, showing that there were no issues with the indicator reliability. The indicator item loadings ranged from 0.804 to 0.908.

4.6.4.3. Convergent validity

The average variance extracted (AVE) value was again used to assess the measurement model's convergent validity. The AVE values for constructs ranged from 0.679 to 0.822. This showed that the measurement model had sufficient convergent validity as the AVE values were all higher than 0.5.

4.6.4.4. Discriminant validity

Discriminant validity checks were done using two methods; first the Fornell and Larcker's Criterion and second by looking at the Heterotrait-Monotrait Ratio (HTMT). The Fornell and Larcker's Criterion did not show any discriminant validity issues, as shown in Table 23. Also, all the indicator loadings were higher for their own construct than for all other constructs.

Table 23: Fornell and Larcker's criterion from SmartPLS – second dataset

	BI	**EE**	**FC**	**HM**	**PE**	**PV**	**SI**	**SQ**	**TR**
BI	0.861								
EE	0.731	0.854							
FC	0.639	0.710	0.853						
HM	0.700	0.808	0.730	0.907					
PE	0.732	0.769	0.659	0.777	0.844				
PV	0.692	0.800	0.665	0.785	0.760	0.901			
SI	0.649	0.777	0.688	0.759	0.758	0.799	0.873		
SQ	0.773	0.799	0.683	0.776	0.765	0.820	0.768	0.824	
TR	0.709	0.799	0.672	0.810	0.743	0.775	0.717	0.795	0.863

When assessing the HTMT results, it was noted that the ratios for almost all latent variables were higher than 0.9; with the exception of FC and SI (see Table 24). However, as the structural model contained higher order constructs (HM and PV), it was necessary to use the "embedded two-stage approach" by Sarstedt et al. (2019). This involves

exporting the latent variable scores (LVS) in stage one, and using the construct scores in stage two, as indicators in the higher order construct's measurement model (see Figure 26). When using the embedded two-stage approach, the results showed discriminant validity was established for all constructs, as summarised in Table 25.

Table 24: Heterotrait-Monotrait Ratio (HTMT) results – second dataset

	BI	EE	FC	HM	PE	PV	SI	SQ	TR
BI									
EE	0.890								
FC	0.777	0.870							
HM	0.816	**0.947**	0.855						
PE	**0.902**	**0.952**	0.815	**0.921**					
PV	0.811	**0.942**	0.783	0.884	**0.906**				
SI	0.777	**0.937**	0.827	0.875	**0.924**	**0.925**			
SQ	**0.906**	**0.942**	0.804	0.875	**0.913**	**0.929**	0.889		
TR	0.855	**0.969**	0.818	**0.942**	**0.912**	**0.903**	0.857	**0.929**	

Table 25: Heterotrait-Monotrait Ratio (HTMT) results using latent variable scores – second dataset

	BI	EE	FC	PE	SI	SQ	TR
BI							
EE	0.731						
FC	0.639	0.71					
PE	0.732	0.769	0.659				
SI	0.649	0.777	0.688	0.758			
SQ	0.773	0.799	0.683	0.765	0.768		
TR	0.709	0.799	0.672	0.743	0.717	0.795	

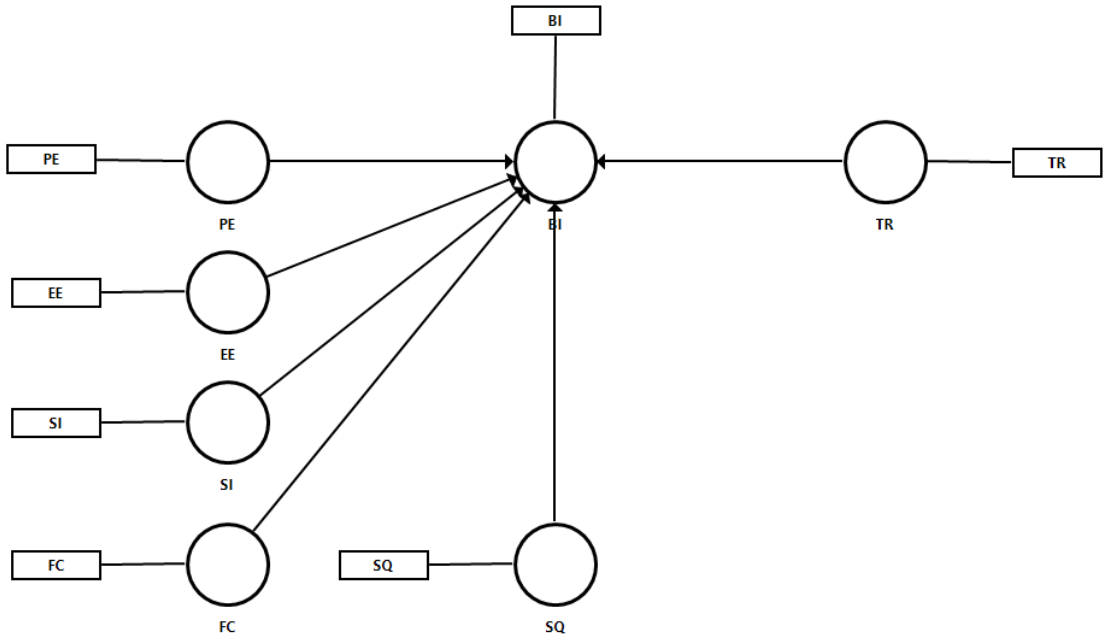

Figure 26: Using the construct scores as indicators - the embedded two-stage approach

Table 26: Final measurement model results

Latent Variable	Indicator	Loadings	Indicator Reliability (i.e. Loadings^2)	Cronbach's Alpha	rho_A	Composite Reliability (CR)	Average Variance Extracted (AVE)
Behavioural Intention (BI)				0.825	0.825	0.895	0.741
	BI1	0.854	0.729				
	BI2	0.852	0.726				
	BI3	0.875	0.766				
Effort Expectancy (EE)				0.815	0.817	0.89	0.73
	EE1	0.864	0.746				
	EE2	0.846	0.716				
	EE3	0.853	0.728				
Facilitating Conditions (FC)				0.814	0.815	0.889	0.728
	FC1	0.84	0.706				
	FC2	0.875	0.766				
	FC3	0.845	0.714				
Hedonic Motivation (HM)				0.892	0.892	0.933	0.822
	HM1	0.908	0.824				
	HM2	0.906	0.821				
	HM3	0.907	0.823				
Performance Expectancy (PE)				0.797	0.798	0.881	0.712
	PE1	0.863	0.745				
	PE2	0.831	0.691				
	PE3	0.837	0.701				

Latent Variable	Indicator	Loadings	Indicator Reliability (i.e. Loadings^2)	Cronbach's Alpha	rho_A	Composite Reliability (CR)	Average Variance Extracted (AVE)
Price Value (PV)				0.884	0.884	0.928	0.811
	PV1	0.906	0.821				
	PV2	0.893	0.797				
	PV3	0.903	0.815				
Social Influence (SI)				0.845	0.846	0.906	0.763
	SI1	0.878	0.771				
	SI2	0.878	0.771				
	SI3	0.864	0.746				
Service Quality (SQ)				0.881	0.882	0.913	0.679
	SQ3	0.837	0.701				
	SQ4	0.804	0.646				
	SQ5	0.804	0.646				
	SQ6	0.835	0.697				
	SQ7	0.838	0.702				
Trust (TR)				0.829	0.834	0.898	0.745
	TR1	0.882	0.778				
	TR5	0.838	0.702				
	TR6	0.869	0.755				

4.6.4.5. Goodness of model fit

	Saturated Model	Estimated Model
SRMR	0.041	0.047
d_ULS	0.723	0.961
d_G	0.541	0.571
Chi-Square	1092.302	1117.173
NFI	0.863	0.859

4.6.5. Final structural model

Following the confirmation of the final measurement model's reliability and validity using the second dataset (as detailed in 4.6.4.), the analysis proceeded to evaluate the inner structural model. This stage focuses on assessing the strength and significance of the hypothesised relationships between the latent constructs, ultimately

determining which factors significantly predict user acceptance of SAVs within this refined framework. The final hypothesis testing results are presented and discussed below.

4.6.5.1. Final Hypothesis testing

To assess the significance of the relationships within the final structural model using the second dataset (N=351), a standard bootstrapping procedure was executed in SmartPLS. This non-parametric resampling technique involved generating 5,000 subsamples (a common number for robust estimates) to calculate standard errors, t-statistics, and p-values for the path coefficients. A significance level (alpha) of 0.05 was adopted as the threshold for supporting the hypotheses; paths with p-values less than or equal to 0.05 and path coefficients of meaningful magnitude (typically > 0.1) were considered statistically significant.

The results of this final bootstrapping analysis are summarised in Table 27. The findings indicate strong support for several key hypotheses derived from both the original UTAUT2 framework and the extensions proposed in this research.

Table 27: Final structural model hypotheses testing results

Hypotheses	**Variables**	**Path Coefficient**	**P-Value**	**T-Statistics**	**Result**
H1	PE – BI	0.258	0.000	3.326	Supported
H2	EE - BI	0.163	0.019	2.074	Supported
H3	SI – BI	**-0.099**	**0.093**	1.325	Not Supported
H4	FC – BI	0.102	0.021	2.036	Supported
H8	TR – BI	**0.083**	**0.075**	1.440	Not Supported
H9	HM - SQ	0.344	0.000	5.777	Supported
H10	SQ – BI	0.385	0.000	4.155	Supported
H11	PV - SQ	0.550	0.000	9.859	Supported

*. P-Value is significant at the .05 level.

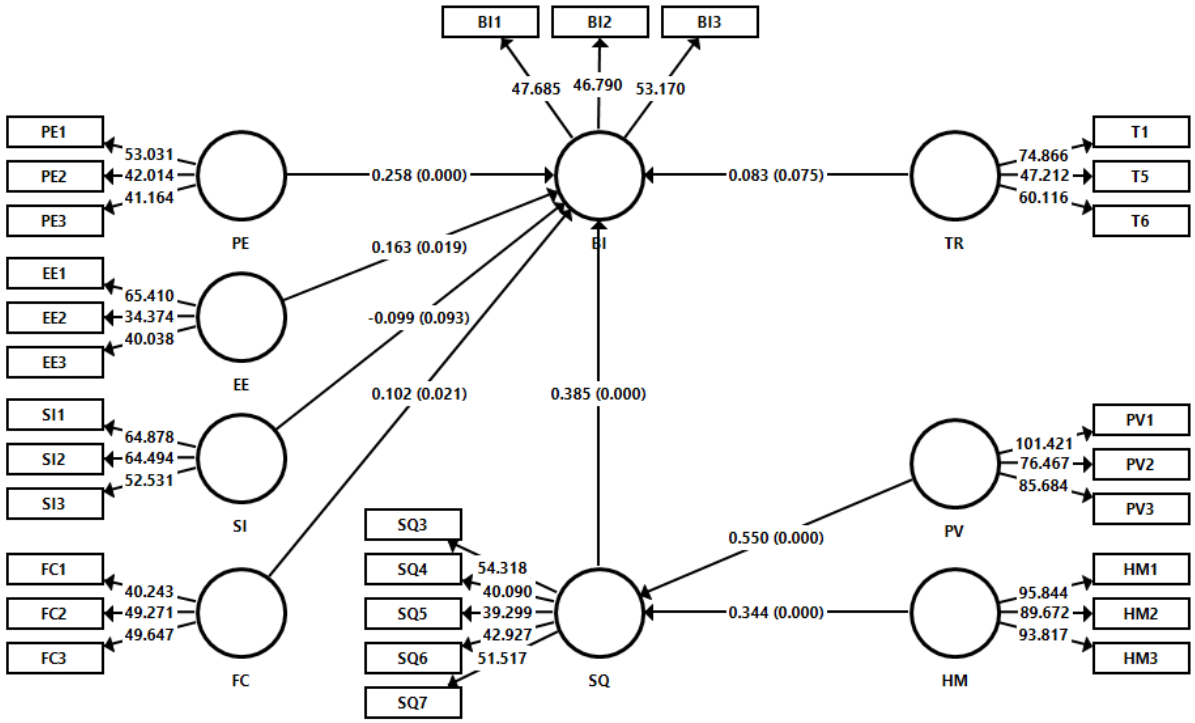

Figure 27: Result from final Structural Model

4.7. Discussion

This study used the modified UTAUT2 model by Dichabeng et al. (2021) to test the factors that affect the user acceptance of SAVs using quantitative data collected through an online instrument. The aim was to measure if the newly introduced constructs Service Quality (SQ) and Trust (TR) have any effect on users' behavioural intention (BI) towards SAVs.

These final results solidify the importance of Performance Expectancy (PE), Ease Of Use (EE), Facilitating Conditions (FC), and especially Service Quality (SQ) in driving users' intentions to adopt SAVs based on virtual exposure. The strong paths from HM and PV to SQ suggest that making the SAV experience enjoyable and good value for money are key levers for improving perceived service quality, which in turn strongly influences adoption intention. However, the lack of significant direct influence from Trust and Social

Influence in this final model is noteworthy. As discussed previously (Section 4.7 and later in Chapter 5), the non-significant Trust finding might reflect the limitations of assessing this construct without real-world experience or high-fidelity realism, particularly given the device variability. The non-significant SI result suggests that, for this sample, peer opinions may be less impactful on SAV intention formation compared to individual assessments of performance, effort, resources, and service quality.

In this study, Service Quality (SQ) was the strongest predictor of Behavioural Intention (BI) to SAVs. This is contrary to Madigan et al. (2017) who found Hedonic Motivation (HM) to be the strongest predictor of BI, in a study in which participants experienced early SAV prototypes in Greece. This results is also contrary to Nordhoff et al. (2020a). However, HM was only found to be one of the strongest predictors of BI, in the absence of SQ; a result that could be replicated in this study. This finding suggests that SQ is likely to greatly influence users' ability to enjoy (HM) using SAVs.

Similar to Madigan et al. (2017), this study also showed that the UTAUT2 constructs Performance Expectancy (PE), and Facilitating Conditions (FC) are significant and have a strong effect on Behavioural Intention (BI) towards SAVs. A contrary result was found for Effort Expectancy (EE), which did not emerge in the study by Madigan et al. (2017), but was found to influence BI in this study. The authors in Madigan et al. (2017) speculated that EE did not emerge as users may have been willing to exert additional effort for the novel transport option. They further speculated, since Automated Road Transport Systems (ARTS) operate similarly to regular public transport, no additional skills or expertise were required, which might have led users to perceive minimal effort in adapting to it.

The study also showed that Trust (TR) had no effect on Behavioural Intention (BI). This could be due to the fact that, as opposed to Madigan et al. (2017) and Nordhoff et al. (2020b), the participants in this study were not exposed to the SAVs in a real-world setting. As such, they may not have had the opportunity to develop trust in the vehicles. Similarly, since this study was conducted online, the participants may not have had the opportunity to interact with the vehicles and form a personal relationship with the SAVs. This could explain why the construct of Trust (TR) had no effect on Behavioural Intention (BI). However, an online study conducted by Foroughi et al. (2023) using 378 respondents found that for AVs, not SAVs, Trust had a significant influence on Behavioural Intention BI. These results could suggest that Trust is a more complex factor that needs real world experience with assessing its influence on Behavioural Intention.

Social Influence (SI) was also found to have no significant effect on Behavioural Intention (BI) towards SAVs in this study.

4.8. Conclusions

Overall, these findings highlight the importance of considering contextual factors, such as exposure to the technology and the specific type of autonomous vehicle being considered, when examining the factors that influence user acceptance. Further research is needed to understand how trust influences user acceptance of different types of autonomous vehicles and how this can be leveraged to promote their adoption.

The finding that Effort Expectancy (EE) has a negative effect on BI towards SAVs is more complex and warrants further investigation. It suggests that users may be less likely to form an intention to use SAVs if they perceive them as being too easy to use, possibly because they feel that this simplicity might lead to decreased control or less

engagement with the driving experience. This highlights the need to carefully balance ease of use and control when designing SAVs and to consider the potential psychological effects of overly simplified interfaces.

The finding that Performance Expectancy (PE) and Facilitating Conditions (FC) have a strong positive effect on Behavioural Intention (BI) towards SAVs is consistent with previous research and highlights the importance of these factors in promoting the acceptance of SAVs. This suggests that users are more likely to form an intention to use SAVs if they perceive them as providing better performance and if they believe that the necessary conditions and resources are available to use them.

Chapter 5

Study 2: Presence in using passive monoscopic virtual reality environments to study segmented shared spaces in highly automated vehicles

Chapter 5 Study 3: Presence in using passive monoscopic virtual reality environments to study segmented shared spaces in highly automated vehicles

5.1. Introduction

Shared Automated Vehicles (SAVs) have the potential to revolutionise the transportation sector and address key challenges, such as traffic congestion, fuel consumption, and road safety (Fagnant, D.J. and Kockelman, 2015). However, the development and integration of these future technologies into real-world settings are complex processes that require rigorous research and evaluation, particularly concerning user acceptance and experience, which are critical for successful adoption.

Virtual Reality (VR) emerges as a powerful research tool in this context, offering controlled environments to simulate and evaluate AV performance, safety (Nhtsa, 2020), and crucially, the user experience before widespread deployment. While VR has been explored for human-vehicle interaction and training in AV contexts, this chapter focuses specifically on its application for studying passenger experience within SAVs, specifically concerning the design of segmented shared spaces. Understanding how potential users perceive and react to novel SAV interiors is vital, yet direct real-world experience is often impossible.

To address the intricacies of SAVs and passenger interaction within these novel environments, robust methodologies are essential. VR offers a valuable platform for controlled experimentation, particularly for investigating novel interior configurations that do not yet exist physically. Ong et al. (2019) defines 'segmented shared spaces' as the intentional division of the SAV cabin into distinct zones, potentially catering to diverse activities or user groups. Understanding user perception and interaction within these

segmented spaces is important for optimising future SAV designs in order to achieve user acceptance of SAVs.

However, the choice of VR methodology carries significant implications. The main quantitative study of this thesis (Chapter 4) employed passive monoscopic VR simulations, viewed online by participants on their own devices. This approach was chosen for its pragmatic advantages – accessibility, scalability, and cost-effectiveness for reaching a large, geographically diverse sample without requiring specialised hardware. Yet, this methodological choice introduces a critical variable: the diversity of participant viewing devices, ranging from large desktop monitors to small smartphone screens.

It is well-established that the technical characteristics of a VR system influence the user's subjective sense of "being there," known as presence (Witmer and Singer, 1998). Higher levels of presence are generally associated with more realistic and ecologically valid responses from participants (Slater, Mel et al., 2009). Therefore, a key methodological question arises: does the variation in screen size across participant devices significantly impact the level of presence elicited by passive monoscopic VR? If presence differs substantially based on the device, it could affect the uniformity of the stimulus experience and the generalisability of the acceptance findings reported in Chapter 4.

This chapter directly addresses this methodological uncertainty.

5.1.1. Research Aim

The primary aim of this study is to evaluate the impact of display screen size on the sense of presence experienced by participants viewing passive monoscopic VR simulations of segmented shared spaces in SAVs. This is crucial for determining the

validity and potential limitations of this accessible VR methodology, as it was used in Chapter 4 – Study 2, for studying user perception of these novel vehicle environments. Specifically, this research focused on passive monoscopic VR, acknowledging that while it may not offer the highest levels of immersion compared to stereoscopic or active VR, it represented a cost-effective and readily accessible technology that is potentially a pragmatic and scalable option for VR-based research, particularly for online studies with large participant samples.

By comparing the experiences of users viewing the VR content on different screen sizes, the study sought to determine whether larger screens would contribute to a higher sense of presence or if smaller screens could provide a comparable experience. This exploration is crucial for understanding how the choice of display technology inherent in participant-provided devices may impact user engagement and immersion in virtual environments, ultimately informing the design and implementation as well as interpretation of effective VR treatments and findings in future research.

Ultimately, this research aims to contribute to the validation of passive monoscopic VR as a research tool for investigating user responses to segmented shared spaces in SAVs, by examining the influence of screen size on the crucial factor of presence. The finding from this study would also confirm if screen size had a significant impact on the dataset used in study 2 (Chapter 4), providing critical context for interpreting those acceptance results.

5.2. Method

This section details the methodology employed to investigate the impact of display screen size on the sense of presence experienced by participants viewing passive

monoscopic VR simulations of segmented shared spaces within SAVs. The study aimed to evaluate the validity of using this accessible VR approach for research on passenger experience in future mobility contexts.

5.2.1. Participants

The data analysed in this chapter were drawn from the larger dataset collected for Study 2 (detailed in Chapter 4, also shown in Table 28). A total of 351 participants completed the study sufficiently for inclusion in this presence analysis. Recruitment was primarily conducted via social media (e.g., 'Leedsface' Facebook group), the University of Leeds Institute for Transport Studies Driving Simulator volunteer database, and the online recruitment platform callforparticipants.com.

Table 28: Participant information

Gender		**Devices**		**Screen Size**	
Male	202	Smartphone	144	Large Screen	207
Female	149	Laptop	137	Small Screen	144
	351	Desktop	49		351
		Tablet	21		
			351		

Participants were screened via an online form to ensure they met the following criteria:

- Aged 18 years or older.
- British nationals or resided in the UK for at least the past five years (to minimise cross-cultural effects).
- Self-identified as non-experts in automated vehicle research or development.

- Owned and/or used a car at least weekly.
- Had used a ridesharing or carsharing service (e.g., Uber) at least once in the 12 months prior to the study.

Convenience sampling was employed due to the online recruitment method. Ethical approval for the study was obtained from the University of Leeds Research Ethics Committee (Ref: LTTRAN-130). All participants provided informed consent online before commencing the study.

5.2.2. Research Design

The research employed a mixed-design, combining both within-subjects and between-subjects factors.

The within-subjects factor was the SAV interior scenario. Each participant experienced all three conditions (Private Ride-Sharing, Communal Ride-Sharing, and Flexible Ride-Sharing), an approach which enhances statistical power and controls for inter-individual variability when comparing responses across the scenarios (Bellemare et al., 2014).

The between-subjects factor, which is the primary focus of the analysis in this chapter, was the display device used by participants to view the VR stimuli videos. Since participants used their own devices, this created natural comparative groups. For an initial analysis, devices were categorised into two main groups:

- Small Screen: Smartphones
- Large Screen: Desktops, Laptops, and Tablets

A more granular secondary analysis further examined potential differences across the four specific device types: Desktop, Laptop, Tablet, and Smartphone. The primary dependent variable for all analyses was the sense of presence experienced by participants, measured using the Igroup Presence Questionnaire (IPQ) (Schubert et al., 2001). Specific sub-dimensions of presence (Spatial Presence, Involvement, Realism) and a general presence measure were assessed.

To mitigate potential order effects arising from the sequential presentation of the three SAV scenarios in the original data collection, a counterbalancing procedure involving six distinct presentation orders was implemented (See Chapter 4, Figure 21). Participants were randomly assigned to one of six groups.

5.2.3. Video Scenarios

Participants viewed three passive monoscopic VR videos, each lasting 2 minutes and 30 seconds. These videos simulated a typical daytime commute trip from home to work within an SAV. The videos depicted the journey from a first-person passenger perspective, allowing participants to "look around" via an animated camera simulating head movements. The SAV concept was based on a modified four-door version of the Dosch Design autonomous car concept (Figure 14, in Chapter 4), featuring no steering wheel or pedals. The three videos represented the different SAV interior configurations corresponding to the ride-sharing scenarios:

- Private Ride-Sharing (PRS): Segmented interior with transparent partitions, minimising interaction (Figure 15).
- Communal Ride-Sharing (CRS): Open, communal interior allowing free interaction (Figure 16).

- Flexible Ride-Sharing (FRS): Configurable interior with openable/closable window-like partitions (Figure 17).

Each scenario included one virtual co-passenger at the start of the trip when the participant was picked-up. The trip route involved picking up a second co-passenger (Figure 19, Figure 20).

Participants used their own electronic devices to view the videos and complete the survey. Based on self-reporting, devices were categorised as Smartphone (Small Screen) or Desktop, Laptop, or Tablet (Large Screen).

5.2.4. Questionnaire:

The Igroup Presence Questionnaire (IPQ) was used as the primary measure for this work. This 14-item questionnaire assesses subjective presence using a 7-point Likert-type scale ranging from -3 (strongly disagree/not at all) to +3 (strongly agree/very much). It comprises three subscales (Spatial Presence, Involvement, Realism) and one general presence item (G1). Items SP2, INV3, and REAL1 were reverse-coded for analysis to account for their negative wording and ensure that a higher score consistently represented a greater sense of presence (Schubert et al., 2001). (See Table 29: IPQ Questionnaire Items).

A Misery Scale was used after each VR video exposure as a screening tool to assess Virtual Reality Induced Side Effects (VRISE) or cybersickness, measured on a 10-point comfort scale (Emmerik et al., 2011). Participants scoring below 7 were automatically withdrawn to ensure comfort and data quality.

A demographic questionnaire gathered background information and confirmed device usage. The entire study was administered using a standard online survey platform (Limesurvey).

Table 29: IPQ Questionnaire Items

Item Code	**Item Text**	**Response Scale (7-point Scale)**
G1	In the computer generated world I had a sense of "being there"	-3 (not at all) to +3 (very much)
SP1	Somehow I felt that the virtual world surrounded me.	-3 (fully disagree) to +3 (fully agree)
*SP2	*I felt like I was just perceiving pictures.	-3 (fully disagree) to +3 (fully agree)
SP3	I did not feel present in the virtual space.	-3 (did not feel present) to +3 (felt present)
SP4	I had a sense of acting in the virtual space, rather than operating something from outside.	-3 (fully disagree) to +3 (fully agree)
SP5	I felt present in the virtual space.	-3 (fully disagree) to +3 (fully agree)
INV1	How aware were you of the real world surrounding while navigating in the virtual world? (i.e. sounds, room temperature, other people, etc.)?	-3 (extremely aware) to +3 (not aware at all)
INV2	I was not aware of my real environment.	-3 (fully disagree) to +3 (fully agree)
*INV3	*I still paid attention to the real environment.	-3 (fully disagree) to +3 (fully agree)
INV4	I was completely captivated by the virtual world.	-3 (fully disagree) to +3 (fully agree)
*REAL1	*How real did the virtual world seem to you?	-3 (completely real) to +3 (not real at all)
REAL2	How much did your experience in the virtual environment seem consistent with your real world experience ?	-3 (not consistent) to +3 (very consistent)
REAL3	How real did the virtual world seem to you?	-3 (about as real as an imagined world) to +3 (indistinguishable from the real world)
REAL4	The virtual world seemed more realistic than the real world.	-3 (fully disagree) to +3 (fully agree)

***Note**: The scale for all items was a 7-point Likert-type scale ranging from -3 to +3. An asterisk (*) indicates items that were reverse-coded for analysis due to negative phrasing or inverted scale anchors.*

5.2.5. Procedure

The procedure commenced with participants accessing the study via a provided online link. They were first presented with an information sheet outlining the study's aims and process, after which they gave informed consent. Following this, they completed

the demographic questionnaire and eligibility screening. Participants were then randomly assigned to one of the six counterbalanced presentation orders for the VR videos. They proceeded to watch the three videos sequentially on their chosen device. After each video, they completed the Misery Scale check. Provided their comfort level remained adequate (score ≥ 7) after all exposures, they then completed the IPQ.

5.2.6. Measures

Presence was the key measure, derived from the IPQ scores. Scores for the General Presence item (G1) and the averages for the Spatial Presence, Involvement, and Realism subscales were calculated, with higher scores denoting a greater sense of presence. Screen Size and Device Type served as the categorical independent variables, analysed both as a dichotomous grouping (Small vs. Large Screen) and as four distinct categories (Desktop, Laptop, Tablet, Smartphone).

5.2.7. Data Analysis

Data analysis was performed using IBM SPSS Statistics v24. To assess the impact of device type on the sense of presence, a series of one-way Analyses of Variance (ANOVAs) were conducted. The independent variable for each ANOVA was the self-reported device type, with four levels: Desktop, Laptop, Tablet, and Smartphone. The dependent variables were the scores for each of the primary presence dimensions derived from the Igroup Presence Questionnaire (IPQ).

Where an ANOVA indicated a significant overall difference between groups ($p < .05$), post-hoc tests using Tukey's Honest Significant Difference (HSD) were performed to identify which specific device pairings differed significantly. Tukey's HSD was chosen as it provides a robust method for conducting all possible pairwise comparisons while

controlling for the family-wise error rate. Tukey's HSD is typically used for pairwise comparisons among groups and is preferred for balanced designs due to its moderate balance between Type I (false positive) and Type II (false negative) error risks. In contrast, the Bonferroni correction is more conservative, strongly controlling Type I errors by adjusting the significance threshold based on the number of comparisons, but consequently increasing the risk of Type II errors.

An initial, broader comparison between Small Screen (Smartphones) and Large Screen (Desktops, Laptops, Tablets) devices using independent samples t-tests was also conducted to provide a general overview of the effect of screen size. Statistical significance for all inferential tests was determined using an alpha level of $\alpha = .05$.

5.3. Results

This section details the findings from the investigation into the effects of display device type on the sense of presence, as measured by the Igroup Presence Questionnaire (IPQ). The results are presented first by comparing the broader categories of Small Screen (Smartphones) versus Large Screen (Desktops, Laptops, Tablets) devices. Following this initial grouped analysis, a more detailed examination explores the differences across the four specific device types.

5.3.1. General Effect of Screen Size

The IPQ results reveal some differences in presence scores between screen size groups (See Figure 28: IPQ Questionnaire Results). The mean scores for the different IPQ factors are: General: Small screen - 5.80, Large screen - 6.03 Spatial Presence: Small screen - 4.92, Large screen - 5.06 Involvement: Small screen - 4.45, Large screen - 4.35 Realism: Small screen - 4.44, Large screen - 4.69

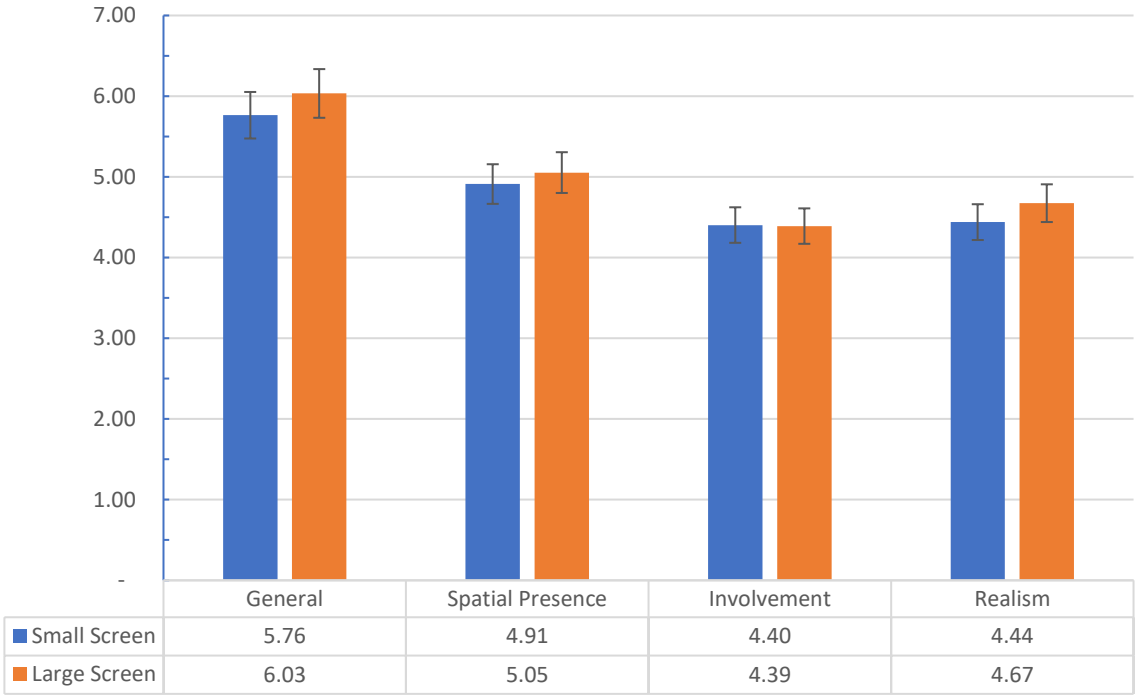

Figure 28: IPQ Questionnaire Results

The results indicate that screen size appears to exert a selective influence on participants' experience of presence in monoscopic VR. The mean scores from the IPQ Presence Questionnaire indicate that there are some differences between the two conditions (Large screen vs Small screen).

General presence: The large screen (6.03) had a slightly higher mean score compared to the small screen (5.76). This statistically significant difference ($p = .023$) suggests that the large screen may provide a marginally more immersive experience for users, resulting in a higher sense of general presence.

Spatial Presence: Similarly, the large screen (5.05) had a higher mean score for spatial presence compared to the small screen (4.91). Although the large screen group reported a higher mean score than the small screen group, the difference was not

statistically significant (p = .087), indicating that the spatial aspects of presence were perceived similarly regardless of screen size.

Involvement: Interestingly, the small screen (4.40) scored slightly higher in involvement than the large screen (4.39), although virtually identical. This result corroborates the non-significant t-test result (p = .844), and implying that the level of engagement or immersion was comparable between groups.

Realism: The large screen (4.67) had a significantly higher mean score (p = .005) in realism compared to the small screen (4.44). This result suggests that larger screens may enhance the perceived authenticity of the virtual environment.

Collectively, these group statistics, aligned with the inferential results, indicate that screen size appears to influence the general sense of presence and perceived realism, while having little impact on spatial presence and involvement. An initial comparison using independent samples t-tests indicated that screen size had a significant impact on General Presence ($t(349) = 2.28$, $p = .023$) and Realism ($t(349) = 2.86$, $p = .005$), with larger screens eliciting higher presence scores in both dimensions. No significant differences were found for Spatial Presence (p = .087) or Involvement (p = .844), suggesting these aspects were perceived similarly regardless of overall screen size.

The detailed statistical comparisons underpinning these observations for the overall presence dimensions (General Presence, Spatial Presence, Involvement, and Realism) are presented in Table 30. This table provides the mean scores (M), standard deviations (SD), results from the independent samples t-tests (t-statistic and p-value), and Cohen's d effect sizes for the Large Screen versus Small Screen groups, quantifying the significance and magnitude of the observed differences. These detailed results

confirm the significant differences noted for General Presence and Realism, and the non-significant differences for Spatial Presence and Involvement when comparing the two screen size categories.

Table 30: Descriptive Statistics and Independent Samples t-test Results Comparing IPQ Presence Dimensions Between Large Screen and Small Screen

	Large Screen *(n=207)*		***Small Screen*** *(n=144)*		***t(349)***	***p***	***Cohen's***
Measures	*M*	*SD*	*M*	*SD*			*d*
General Presence	6.03	1.134	5.76	1.031	2.276	*0.023**	0.25
Spatial Presence	5.05	0.834	4.91	0.643	1.719	*0.087*	0.19
Involvement	4.39	0.622	4.40	0.549	-0.197	*0.844*	0.02
Realism	4.67	0.810	4.44	0.674	2.856	*0.005**	0.31

** The mean difference is significant at the 0.05 level.*

5.3.2. Device-Specific Effects on Presence Dimensions

To explore these differences more granularly, a series of one-way ANOVAs were conducted to assess the effect of device type (Desktop, Laptop, Tablet, Smartphone) on each presence dimension. The ANOVAs revealed a significant main effect of device type primarily on the dimensions of General Presence (G1), Realism (REAL2, REAL4), and to a lesser extent, Involvement (INV1, INV3). A full summary of these omnibus tests is provided in Table 30.

Table 31: Analysis of Variance for Dependent Variables by Device Type

Dependent Variable	***F*** *(3, 347)*	***p***	**ηp²**
G1	4.03*	.008	.034
SP1	2.67*	.048	.023
SP2	1.15	.330	.010
SP3	1.72	.162	.015
SP4	1.25	.291	.011
SP5	1.67	.174	.014
INV1	2.59	.053	.022
INV2	1.82	.143	.015
INV3	2.52	.058	.021

Dependent Variable	*F (3, 347)*	*p*	ηp²
INV4	1.92	.126	.016
REAL1	0.49	.686	.004
REAL2	4.41**	.005	.037
REAL3	2.56	.055	.022
REAL4	3.88**	.009	.032

Note. Degrees of freedom for all F-tests are (3, 347). ηp² = partial eta-squared, representing the effect size.

Given the significant overall results from the ANOVAs, post-hoc tests using Tukey's Honest Significant Difference (HSD) were conducted to explore specific pairwise group differences.

For the General Presence dimension (G1), Tukey's HSD identified significant differences between Desktop and Laptop users (p = .049), and between Desktop and Smartphone users (p = .003). Mean differences indicated Desktop users scored higher compared to Laptop and Smartphone users. Specifically, desktop users reported significantly higher levels compared to smartphone users (p = .003, Mean Difference = 0.624). This finding suggests that larger screens may facilitate a greater sense of overall presence in virtual environments, potentially due to their more immersive visual field.

The involvement subscale of the IPQ yielded mixed results that approached significance in the overall ANOVA. For INV1, Tukey's HSD showed a significant difference between Laptop and Tablet users (p = .030). Specifically, Tablet users reported significantly higher involvement than laptop users (p = .036, Mean Difference = 0.671). For INV3, a significant difference was also found between Desktop and Tablet users (p = .040). This showed that tablet users also reported significantly higher involvement than desktop users (p = .048, Mean Difference = 0.850). This unexpected finding regarding tablet involvement may be attributed to the unique characteristics of tablets, which

combine a relatively large screen with enhanced portability and tactile interaction. Such features could potentially foster a more engaging and involved user experience.

The experienced realism subscale provided further insights into device-specific effects. For REAL2, Tukey's HSD identified significant pairwise differences between Desktop and Smartphone users (p = .042), and between Laptop and Smartphone users (p = .011). Thus, Laptop users reported significantly higher experienced realism than smartphone users (p = .013, Mean Difference = 0.396).

For REAL4, Tukey's HSD exhibited significant differences between Desktop and Smartphone users (p = .013), and Desktop and Tablet users (p = .029) under Tukey's HSD. Therefore, desktop users reported significantly higher experienced realism compared to both smartphone users (p = .015, Mean Difference = 0.697) and tablet users (p = .035, Mean Difference = 1.000). These results consistently demonstrate that larger screens, particularly desktops, tend to enhance the perceived realism of virtual experiences.

Table 32: ANOVA and Post Hoc Comparisons of Dependent Variables by Device Type

Dependent Variable	**Comparison**	**Mean Difference**	***p* (Tukey)**
G1	Desktop vs. Laptop	0.468	0.049*
	Desktop vs. Smartphone	0.624	0.003*
SP1	Desktop vs. Smartphone	0.495	0.075
INV1	Laptop vs. Tablet	0.671	0.030*
INV3	Desktop vs. Tablet	0.850	0.040*
REAL2	Desktop vs. Smartphone	0.470	0.042*
	Laptop vs. Smartphone	0.396	0.011*
REAL4	Desktop vs. Smartphone	0.697	0.013*
	Desktop vs. Tablet	1.000	0.029*

** The mean difference is significant at the 0.05 level.*

Note. Only comparisons reaching or approaching significance are included.

The desktop device emerges as a prominent factor in enhancing presence, particularly general presence and outperforming other devices, particularly smartphones in experienced realism, consistently outperforming smaller devices like smartphones. Conversely, the smartphone consistently showed lower presence scores compared to larger screen devices and did not show superior performance in any of the significant comparisons. The tablet device presents an intriguing case, showing superiority in involvement measures when compared to both laptops and desktops. These nuanced findings underscore the complex interplay between device characteristics and different facets of presence in virtual experiences, highlighting the need for a multidimensional approach when evaluating the efficacy of various devices for delivering immersive content.

5.4. Discussion

The results of this study are in line with some previous research findings that suggest screen size and display technology can impact the sense of presence in virtual environments. However, it is essential to note that the results may not be directly comparable to other studies due to differences in methodology, virtual environment content, and the type of VR systems used.

General presence and Spatial Presence: This study found that the large screen provided a higher sense of general presence and spatial presence compared to the small screen. This finding is consistent with research indicating that larger screens and wider fields of view can contribute to an increased sense of presence (Lombard & Ditton, 1997; IJsselsteijn et al., 2001). For instance, Lin et al. (2002) demonstrated that increasing the field of view significantly enhances spatial presence, though benefits plateau at very wide

angles, which may partly explain why the difference between large and small screens in this study, while statistically significant for general presence, was modest for spatial presence. Nonetheless, larger screens can provide users with a more immersive experience, making them feel more physically present and located within the virtual environment.

Involvement: In this study, the small screen scored slightly higher in involvement than the large screen. This finding is not consistent with previous research, which often suggests that more immersive display technologies lead to higher levels of involvement (IJsselsteijn et al., 2001; Schubert et al., 2001). It is plausible that the ergonomic characteristics and cognitive processing demands imposed by smaller displays might foster a more focused or effortful engagement, perhaps requiring more active attention compared to the potentially more passive viewing on a large desktop screen. The unexpected finding regarding involvement, particularly the strength of tablets, warrants further consideration. Unlike the passive viewing associated with desktops, tablets often involve direct touch interaction and are held closer, potentially creating a different kind of cognitive engagement loop. Furthermore, the constrained view on smaller screens might paradoxically force more focused attention within the frame, reducing susceptibility to external distractions compared to a large screen dominating the peripheral visual field but still leaving the real world perceptible.

Moreover, this unexpected pattern, particularly the finding that tablets showed higher involvement than desktops or laptops in some pairwise comparisons, underscores the importance of considering additional objective measures, such as eye-tracking or physiological responses, to further elucidate the underlying factors influencing involvement. This finding also highlights a potential difference between screen-based

passive VR and head-mounted display (HMD) VR, where greater visual immersion typically correlates more strongly with involvement.

Realism: The large screen in this study had a higher mean score in realism compared to the small screen. This is in line with previous research that suggests larger screens and higher-quality displays can increase the perceived authenticity of virtual environments (Bracken, 2005; Cummings & Bailenson, 2016). This is further supported by studies indicating that improved image quality and wider fields of view enhance the believability of virtual experiences, although the benefits of increasing resolution tend to exhibit diminishing returns beyond a certain threshold (Zimmons & Panter, 2003; Slater et al., 2009). The significantly higher realism scores on larger screens, especially desktops, align with the implication that designers aiming for maximum environmental authenticity in SAV simulations might prioritise larger, high-fidelity displays. While large screens improved realism, it's important to remember that this was passive monoscopic VR, lacking the depth cues of stereoscopy or the interactivity of fully tracked systems, which inherently limits the maximum achievable realism compared to more sophisticated VR setups.

Taken together, the findings present a complex picture. While larger screens demonstrably enhance the believability and sense of being located within the virtual SAV environment (realism and general/spatial presence), they do not necessarily translate to deeper psychological engagement (involvement), where smaller, perhaps more interactively-held devices like tablets showed surprising strength. This suggests that different facets of presence may respond differently to display characteristics in passive viewing scenarios, and that the definition of an 'optimal' display may depend on which aspect of presence is prioritised.

Crucially, these presence findings inform the interpretation of the acceptance results presented in Chapter 4. The fact that presence was successfully elicited across different devices, albeit moderately and variably, lends credibility to using passive monoscopic VR as a stimulus delivery method for assessing initial user reactions to novel SAV concepts. However, the significant variation in presence levels, particularly realism, based on device type (especially the lower scores for smartphones) raises questions about the uniformity of the stimulus experience across participants in the main study. If a large proportion of participants in Chapter 4 used smartphones, the potentially lower sense of realism they experienced might have attenuated the relationships observed in the acceptance model, particularly for constructs sensitive to perceived environment or experience authenticity (e.g., Trust elements related to perceived safety or Service Quality elements related to comfort). Future analyses of acceptance data could benefit from controlling for device type or examining potential interaction effects, although sample sizes per device category might limit statistical power.

Beyond the specific application to SAV research, this study underscores a critical methodological consideration for any researcher employing passive monoscopic VR in online studies: participant device type is not a neutral factor. The choice between prioritising reach and accessibility (allowing diverse devices including smartphones) versus controlling stimulus fidelity (requiring specific hardware or larger screen sizes) has tangible consequences for the resulting sense of presence and, potentially, the validity and generalisability of behavioural or attitudinal findings. Researchers must acknowledge and ideally account for this variability when designing studies and interpreting results.

While screen size demonstrably influences presence, particularly realism and general presence, the relationship is not uniform across all presence dimensions, with involvement showing a more complex pattern potentially related to device interaction characteristics and cognitive engagement rather than purely visual immersion.

5.5. Implications

Collectively, these findings indicate a general trend favouring larger screens for enhancing presence experiences in monoscopic VR content. This is likely due to the wider field of view and potentially higher perceived detail afforded by larger displays, contributing to a more encompassing and believable virtual environment. However, the results also highlight nuanced differences between devices within the Large Screen category, suggesting that factors beyond mere screen size, such as portability, interaction method, and typical use context, may influence presence. For instance, the elevated involvement scores for tablets, despite desktops offering superior realism, might stem from the direct tactile interaction and portability of tablets, fostering a different, perhaps more personally engaging, type of connection with the content compared to the more passive viewing experience often associated with desktops or laptops. The consistent underperformance of smartphones across multiple presence measures implies that small screens may be suboptimal for delivering highly convincing VR experiences demanding strong presence in the context of future ride-sharing scenarios.

These results have important implications for the design and implementation of VR experiences, particularly in the context of future automated vehicle entertainment and information systems. Developers and designers should consider optimising content for larger screens to maximise presence and realism, while also being mindful of the

unique strengths of different device types, such as the enhanced involvement potentially offered by tablets. This suggests a potential design trade-off: maximizing realism might favour desktop-like displays, while maximizing engagement or interaction could favour tablet formats. The choice may depend on the specific goals of the SAV user experience (e.g., passive entertainment vs. interactive tasks).

Further research is needed to explore the practical significance of these differences and to investigate potential interaction effects between device types and specific content characteristics. Future studies could benefit from controlling for factors such as screen resolution, brightness, and viewing distance more rigorously to isolate the effects of screen size more precisely. Additionally, exploring how task type within the VR simulation interacts with device type could yield valuable insights.

Methodologically, these findings suggest that while passive monoscopic VR accessed via readily available devices can provide usable presence data, researchers must be aware that the choice of participant device introduces a significant variable. Reporting device type and potentially analysing its effect, as done here, is crucial for interpreting results and understanding the potential boundaries of the findings' generalisability.

5.6. Conclusions

This study demonstrates that passive monoscopic VR environments can elicit a measurable level of presence for studying segmented shared spaces in SAVs. While presence scores may not reach levels achieved with fully immersive, head-mounted display (HMD)-based VR technologies, the findings suggest that passive monoscopic VR offers a pragmatically valid and accessible methodology for this research domain, albeit with important caveats related to viewing devices.

The significantly higher presence scores observed for large screens (particularly desktops) in dimensions like General Presence and Realism, suggest that using a larger screen can significantly enhance the perceived believability in this type of simulation. Conversely, Involvement did not follow this pattern, with smaller devices, particularly tablets, showing comparable or even slightly higher engagement scores in some analyses, which could be an important factor related to device handling, focused attention, or tactile interaction rather than sheer visual immersion. Smartphones consistently yielded the lowest presence scores across significant comparisons, suggesting they may be the least suitable device type for maximizing presence in this context.

Crucially, these device-dependent variations imply that the subjective experience of the 'same' VR simulation can differ significantly based on how it is viewed. This directly impacts the methodological consistency when participants use their own diverse devices in online studies and underscores the importance of considering or controlling for device type in VR research.

It is essential to weigh the benefits and limitations of using passive monoscopic VR environments in this study. The key strength of passive monoscopic VR lies in its cost-effectiveness, ease of deployment, and reduced technical complexity, allowing for larger sample sizes and remote data collection compared to lab-based HMD studies. While the absolute presence scores may not be optimal, these practical benefits, including lower costs, easier setup, and reduced technical complexity compared to more immersive systems that require specialised hardware, make it an attractive option for exploratory research or large-scale surveys.

Therefore, this research concludes that while passive monoscopic VR is a viable tool for initial investigations into user perceptions of SAV interiors, researchers must acknowledge and account for the significant influence of display device on the elicited sense of presence. Maximising realism appears to favour larger desktop screens, while maximising involvement might warrant different approaches or consideration of specific device characteristics like those found in tablets. The choice of methodology must balance pragmatic constraints (accessibility, cost, scale) with the desired level and type of psychological fidelity required for the specific research questions being addressed.

5.6.1. Limitations

Focusing solely on measuring presence in this study using only the IPQ Presence Questionnaire introduces several limitations:

First, the IPQ focuses on specific aspects of presence, such as general presence, spatial presence, involvement, and realism. By relying solely on this questionnaire and subjective self-report, this study may miss other factors that can influence user experience in virtual environments, such as usability, comfort, cognitive load, and emotional responses. Furthermore, it lacks objective behavioural data (e.g., interaction patterns, task performance) which could provide complementary insights. Secondly, the IPQ relies on self-report measures, which can be influenced by participants' subjective perceptions, biases (like social desirability or central tendency), and response tendencies. This could limit the accuracy and reliability of the presence measurements.

Third, the IPQ may not be sensitive enough to capture all subtle differences in presence when comparing various display technologies, such as those found in this study. This could result in ceiling or floor effects, where the questionnaire's scores fail to

differentiate meaningfully between conditions if the true differences are small or outside the range effectively measured by the items. Finally, measuring presence alone does not necessarily establish causal relationships between the virtual environment's characteristics (like screen size) and the broader user experience or subsequent user behaviour. By focusing only on presence, this study may overlook other factors that could explain the differences observed in this study or how presence itself influences variables like acceptance or task performance.

The online nature of this study also limited its ability to collect objective physiological or detailed behavioural data often feasible in lab settings. To address these limitations, future research could consider incorporating a wider array of additional measures and methods in this study. For example, future work could include objective behavioural data, such as task performance, reaction times, or eye-tracking metrics or physiological measures (e.g., heart rate variability, skin conductance), to gain a more comprehensive understanding of user experience. Future research may also consider using other questionnaires to assess factors like usability, comfort, and cognitive load. Combining multiple assessment methods can help build on the results of this study to obtain a more robust and nuanced understanding of how users interact with and respond to virtual environments in the study of segmented shared spaces in highly automated vehicles.

5.6.2. Strengths

There are several strengths associated with using the IPQ Presence Questionnaire in this study and focusing on measuring presence:

First, the IPQ is a widely-used and well-established questionnaire for assessing presence in virtual environments. It has been validated in various studies and has demonstrated good psychometric properties, such as reliability and validity (Schubert et al., 2001). Using such a standard, validated instrument increases confidence in the presence measurements obtained. Secondly, the IPQ covers multiple dimensions of presence, including general presence, spatial presence, involvement, and realism. This allows this study to capture different aspects of the user's experience in the virtual environment, providing a more comprehensive and nuanced assessment than single-item or unidimensional measures.

Third, the IPQ is relatively easy to administer and analyse, making it a convenient tool for researchers to collect self-report data on presence. The questionnaire is relatively short, reducing the likelihood of participant fatigue or disengagement during the data collection process. Fourth, using the standardised IPQ allows this study to compare its results with those from other studies that have used the same measure, enabling a better understanding of how these findings fit within the broader body of research on presence in virtual (particularly passive, screen-based) environments.

Fifth, the IPQ has been shown to be sensitive to various factors that can influence presence, such as display technology, visual fidelity, and interactivity (Schubert et al., 2001). This makes it a suitable tool for assessing the impact of different virtual environment conditions (like the device types examined here) on the user's sense of presence. Finally, presence is understood to be an important factor in VR research, as it is believed to influence how users engage with and respond to the virtual environment. By measuring presence, even with the limitations noted, this study gained insights into the effectiveness of the specific passive monoscopic virtual environments used in eliciting

a sense of "being there" in the context of segmented shared spaces in highly automated vehicles, which was crucial for evaluating the methodological approach underpinning the acceptance study in Chapter 4.

Chapter 6

Conclusions

Chapter 6 Conclusions

This thesis investigated the factors influencing the acceptance of high-speed Shared Automated Vehicles (SAVs) among UK private car owners. Using a mixed-methods approach, the research established that conventional technology acceptance models are insufficient for SAVs because they overlook the central importance of Service Quality. The primary contribution of this work is the development and empirical validation of an extended UTAUT2 model, which demonstrates that while factors like performance and effort are relevant, a holistic, high-quality service is the strongest predictor of a user's intention to adopt SAVs.

6.1. Addressing Research Objectives

This section provides a detailed account of how the research presented in this thesis successfully addressed the specific objectives outlined in Chapter 1 (Section 1.5). The research employed a mixed-methods approach, progressing from qualitative exploration to quantitative model testing, complemented by methodological validation, to ensure a comprehensive investigation into the acceptance of SAVs.

Objective 1: To identify key factors, beyond the standard UTAUT2 constructs, that influence potential user acceptance of high-speed shared automated vehicles, particularly focusing on the perspectives of UK private car owners and drivers through qualitative exploration.

This objective was primarily addressed through Study 1, presented in Chapter 3. This study utilised an online asynchronous focus group methodology, specifically targeting UK private car owners and drivers; a demographic identified in prior literature as potentially less inclined towards SAV adoption but crucial for achieving mode shift.

The open-ended, asynchronous format facilitated in-depth exploration of participant attitudes, perceptions, concerns, and requirements regarding both current mobility options and future high-speed SAV concepts, allowing themes to emerge beyond the confines of existing acceptance models.

The qualitative analysis successfully identified Service Quality and Trust as highly prominent factors influencing acceptance, alongside the existing UTAUT2 construct of Price Value. Furthermore, the study identified specific, context-relevant indicators underpinning these main factors, such as Shared Space Quality (encompassing proxemics and interaction preferences) as a key aspect of Service Quality, and Security (including personal safety, cybersecurity, liability) and Trusting Co-passengers as critical components of Trust in the SAV context. This fulfilled the objective by identifying specific, qualitatively-derived factors relevant to the target group and technology.

Objective 2: To develop and empirically test an extended UTAUT2 model that integrates the factors identified in the qualitative phase (specifically Service Quality and Trust), analysing the significance and interplay of these factors alongside original UTAUT2 predictors in explaining behavioural intention to use high-speed SAVs.

This objective was addressed through Study 2, detailed in Chapters 4 and 5. Building on the findings from Study 1, a conceptual acceptance model extending UTAUT2 with Service Quality (SQ) and Trust (TR) constructs was developed. Chapter 4 describes the development of a quantitative online survey instrument incorporating established UTAUT2 scales and newly generated items for SQ, TR, and their respective indicators (including those identified in Study 1). This survey was administered to a larger sample (N=351) of UK drivers after they viewed passive monoscopic VR video simulations

depicting three different SAV interior scenarios (Private, Communal, Flexible Ride-Sharing). Partial Least Squares Structural Equation Modelling (PLS-SEM) was employed to empirically test the hypothesised relationships within the extended model, assessing the direct and indirect effects of all constructs (UTAUT2 originals + SQ + TR) on Behavioural Intention (BI). The model was iteratively refined based on statistical significance.

The empirical testing (Chapter 4) largely validated the extended model. Service Quality (SQ) was confirmed as the strongest predictor of Behavioural Intention (BI), exhibiting a significant positive influence. Original UTAUT2 constructs Performance Expectancy (PE), Effort Expectancy (EE), and Facilitating Conditions (FC) also significantly predicted BI. Trust (TR) and Social Influence (SI), however, did not show a significant direct effect on BI in the final model for this sample and context (online study without direct experience). The analysis also revealed significant interplay, with Hedonic Motivation (HM) and Price Value (PV) strongly influencing BI indirectly through their positive impact on Service Quality. The study thus fulfilled the objective by developing, testing, and refining an extended UTAUT2 model, quantifying the significance of the newly integrated factors (SQ was significant, TR was not directly) and analysing their interplay with original constructs in predicting UK drivers' intentions to use SAVs based on virtual exposure.

Objective 3: To assess the methodological suitability of passive monoscopic virtual reality, viewed on different user devices, for studying user acceptance of future Shared Automated Vehicles by evaluating the level of presence elicited in simulated SAV interior environments.

This objective was specifically addressed in Chapter 5, which analysed the presence data collected concurrently with the acceptance data during the online survey described in Chapter 4. Following exposure to each of the three passive monoscopic VR video scenarios simulating SAV trips, participants completed the Igroup Presence Questionnaire (IPQ). The analysis focused on comparing IPQ scores (General Presence, Spatial Presence, Involvement, Realism) based on the participant's self-reported viewing device. Devices were grouped broadly (Small Screen vs. Large Screen) and analysed specifically (Desktop, Laptop, Tablet, Smartphone) using appropriate statistical tests (t-tests, ANOVAs with post-hoc comparisons).

The analysis demonstrated that passive monoscopic VR, even when viewed on users' own varied devices, is capable of eliciting a measurable sense of presence, supporting its *potential* suitability as a research tool for this context. However, the suitability was found to be contingent on device type. Significant differences were observed: larger screens (especially Desktops) generally yielded higher scores for General Presence and Realism, suggesting they provide a more believable and immersive simulation of the SAV environment. Conversely, Smartphones consistently resulted in lower presence scores across multiple significant comparisons, indicating a potential limitation in validity when using such small screens. Intriguingly, Tablets showed unexpectedly high Involvement compared to both desktops and laptops in some comparisons, suggesting factors beyond simple screen size influence psychological engagement. By quantifying these presence levels and identifying significant differences across devices, the study fulfilled the objective, concluding that while passive monoscopic VR is a *viable and accessible* methodology, its suitability and the resulting data's validity are moderated by the viewing device, with larger screens generally offering a more

'present' experience, especially regarding realism. This provides crucial context for interpreting the main acceptance findings (Objective 2) and informs future methodological choices

Through the sequential application of qualitative exploration (Chapter 3) and quantitative testing (Chapter 4), complemented by methodological validation (Chapter 5), the research objectives guiding this thesis were systematically and comprehensively addressed, providing a richer understanding of the factors shaping user acceptance of high-speed SAVs among UK drivers and the methods appropriate for studying them.

6.2. Contribution to Knowledge and Practice

This study has enriched the understanding of factors influencing private car owners' acceptance of high-speed SAVs, addressing gaps in existing research. By focusing on this specific population and the UK context, the findings contribute to a comprehensive comprehension of the motivations, concerns, and preferences that drive user acceptance, informing the development and promotion of SAVs in the future.

The research also contributes to the development and refinement of theoretical frameworks. By applying and extending the UTAUT2 model to the context of high-speed SAVs, this work helps researchers better understand the factors that drive technology acceptance in the transportation domain and informs future research in this area.

From a practical standpoint, the research provides crucial guidance for vehicle designers, manufacturers, and policymakers. It identifies the features and aspects of high-speed SAVs most important to private car owners, which can assist in developing designs that address user concerns and encourage adoption. The findings can also inform policymakers on the factors that influence user acceptance, helping them create policies

and regulations that support the adoption of these vehicles. This may include incentives for SAV use, infrastructure development, or regulations addressing safety and other barriers.

6.3. Limitations of the research

Several limitations of the research have been identified. For example, the online asynchronous focus group study (Chapter 3) only had 21 participants, which may limit the generalisability of the findings. Participants voluntarily joined the study, which may introduce self-selection bias, potentially affecting the representativeness of the sample. Lastly, online focus groups lack non-verbal cues and spontaneous interactions that can provide additional insights in face-to-face settings.

For the online survey study (Chapter 4), a cross-sectional design was used, which limits the ability to draw conclusions about causal relationships between variables. Furthermore, the use of self-report measures may introduce response bias, social desirability bias, or inaccuracies due to participants' memory or perception. Also, the use of convenience sampling may limit the representativeness of the sample and the generalisability of the findings. Lastly, the study used simulated virtual trips, which may not fully replicate the experience of using SAVs in real-world situations.

In Chapter 5, the study investigated presence using monoscopic VR videos, which may not be as immersive as other VR formats (e.g., stereoscopic or 360-degree videos). The study also did not thoroughly explore contextual factors that might influence the relationship between screen size and presence, such as user preferences or content type.

All three studies were conducted in purely virtual environments using online data collection instruments. Lastly, since the focus of the research was highly contextualised

in the to a specific subset of users (drivers of privately owned vehicles) and limited to the United Kingdom, acceptance may vary across different cultures.

The choice of data collection method impacted both the response rate and the quality of the data collected. Due to limitations in the data collection method, the sample may not fully reflect the broader population of UK drivers, which could impact the generalisability of the findings.

Recognising these limitations is important for interpreting the findings and guiding future research to address these issues and further advance our understanding of user acceptance of SAVs.

6.4. Future research

This thesis offers several avenues for future research to further enhance our understanding of user acceptance of SAVs and inform their design and development.

- Validating the Acceptance Model with Real-World Experience: This thesis established a new acceptance model based on virtual exposure. A critical next step is to conduct studies with participants who have experienced real-world SAV trials. This would be essential for testing the non-significant finding for the Trust construct. As suggested by the results, trust may only become a salient predictor of behavioural intention after direct, physical interaction with the technology, and future research should aim to confirm this.
- Exploring the Nuances of Service Quality and Trust: The qualitative study (Chapter 3) identified Shared Space Quality and Trusting Co-passengers as key new indicators. Future research, both qualitative and quantitative, should delve deeper into these concepts. For instance, in-depth interviews or ethnographic studies

could explore the specific anxieties and expectations surrounding interactions with strangers in a driverless vehicle, providing richer data to inform the design of user-centred SAV interiors.

- Investigating the Role of Presence in Acceptance: Chapter 5 demonstrated that viewing device moderates the sense of presence. Future research should explicitly integrate presence as a variable within the SAV acceptance model. This could involve testing whether the strength of the relationships (e.g., between Service Quality and Behavioural Intention) is stronger for participants who report higher levels of presence. This would methodologically connect the findings of Chapter 5 to the model in Chapter 4.
- Optimising the VR Methodology: Building on Chapter 5, future studies should compare the effectiveness of the passive monoscopic VR used here with more immersive formats (e.g., stereoscopic or interactive HMD-based VR). Such research could determine if a higher level of presence and realism, as afforded by more advanced VR, significantly alters acceptance findings, particularly for constructs like Trust and Hedonic Motivation.
- Testing the Model Across Diverse Populations: While this study focused on UK car owners, the generalisability of the extended UTAUT2 model remains to be tested. Future studies should apply this model to other key demographics, such as non-car owners, users from different cultural backgrounds, or those in urban versus rural settings, to assess the robustness and potential cultural specificity of the identified factors.

By pursuing these targeted research directions, the framework developed in this thesis can be validated, refined, and extended, contributing to a more comprehensive understanding of SAV acceptance.

6.5. Concluding Statement

For SAVs to transition successfully from a technological concept to a widely adopted mobility solution, a fundamental shift in focus is required. Merely demonstrating technological capability and efficiency is not enough. This research has shown that success will ultimately depend on designing and delivering a holistic, high-quality service that directly addresses the complex interplay of performance, comfort, value, and the critical social dynamics inherent in sharing a driverless journey. Trust in the service is as, if not more, important than trust in the technology itself.

List of References

Abdulkareem, M., Alsaidi, L., Mat Yazid, M., Borhan, M. and Mahdi, M. 2020. Traffic Congestion: Shift from Private Car to Public Transportation. *Civil Engineering Journal.* **6**, pp.1547-1554.

Adell, E., Varhelyi, A. and Nilsson, L. 2014. The definition of acceptance and acceptability. *Driver acceptance of new technology. Theory, measurement and optimisation.* pp.11-21.

Ajzen, I. 1991. The theory of planned behavior. *Organizational Behavior and Human Decision Processes.* **50**(2), pp.179-211.

Alessandrini, A., Campagna, A., Site, P.D., Filippi, F. and Persia, L. 2015. Automated Vehicles and the Rethinking of Mobility and Cities. *Transportation Research Procedia.* **5**, pp.145-160.

Alisoltani, N., Leclercq, L. and Zargayouna, M. 2021. Can dynamic ride-sharing reduce traffic congestion? *Transportation Research Part B: Methodological.* **145**, pp.212-246.

Aybek, E.C. and Toraman, Ç. 2022. How Many Response Categories Are Sufficient for Likert Type Scales? An Empirical Study Based on the Item Response Theory. *International Journal of Assessment Tools in Education.* **9**(2), pp.534-547.

Bader, G.E. and Rossi, C.A. 2002. *Focus groups: a step-by-step guide.* 3rd ed. San Diego, CA: The Bader Group.

Bailenson, J.N., Yee, N., Blascovich, J., Beall, A.C., Lundblad, N. and Jin, M. 2008. The Use of Immersive Virtual Reality in the Learning Sciences: Digital Transformations of Teachers, Students, and Social Context. *Journal of the Learning Sciences.* **17**(1), pp.102-141.

Bansal, P. and Kockelman, K.M. 2018. Forecasting Americans' long-term adoption of connected and autonomous vehicle technologies. *Transportation Research Part A: Policy and Practice.* **109**, pp.49-63.

Bansal, P., Kockelman, K.M. and Singh, A. 2016. Assessing public opinions of and interest in new vehicle technologies: An Austin perspective. *Transportation Research Part C: Emerging Technologies.* **67**, pp.1-14.

Bellemare, C., Bissonnette, L. and Krrger, S. 2014. *Statistical Power of within and Between-Subjects Designs in Economic Experiments.*

Bengtsson, M. 2016. How to plan and perform a qualitative study using content analysis. *NursingPlus Open.* **2**, pp.8-14.

Blascovich, J., Loomis, J., Beall, A.C., Swinth, K.R., Hoyt, C.L. and Bailenson, J.N. 2002. Immersive Virtual Environment Technology as a Methodological Tool for Social Psychology. *Psychological Inquiry.* **13**.

Bloor, M., Frankland, J., Thomas, M. and Robson, K. 2001. *Focus groups in social research.*

Bohil, C.J., Alicea, B. and Biocca, F.A. 2011. Virtual reality in neuroscience research and therapy. *Nature Reviews Neuroscience.* **12**(12), pp.752-762.

Bojkovic, N. 2018. Shared Mobility for Sustainable Urban Development *International Journal of Transportation Systems.* **3**.

Bracken, C.C. 2005. Presence and image quality: The case of high definition television. *Media Psychology.* **7**(2), pp.191-205.

Chan, N.D. and Shaheen, S.A. 2012. Ridesharing in North America: Past, Present, and Future. *Transport Reviews.* **32**(1), pp.93-112.

Chang, A. 2012. UTAUT and UTAUT 2: A Review and Agenda for Future Research. *The Winners.* **13**, p10.

Clayton, W., Paddeu, D., Parkhurst, G. and Parkin, J. 2020. Autonomous vehicles: who will use them, and will they share? *Transportation Planning and Technology.* **43**(4), pp.343-364.

Clewlow, R.R. and Mishra, G.S. 2017. *Disruptive Transportation: The Adoption, Utilization, and Impacts of Ride-Hailing in the United States.* [Online]. [Accessed 14 March 2023]. Available from: https://itspubs.ucdavis.edu/wp-content/themes/ucdavis/pubs/download_pdf.php?id=2752

Cobb, S.V., Nichols, S., Ramsey, A. and Wilson, J.R. 1999. Virtual reality-induced symptoms and effects (VRISE). *Presence: Teleoperators & Virtual Environments.* **8**(2), pp.169-186.

Creswell, J.W. 2014. *Research design: qualitative, quantitative, and mixed method approaches.* 4th ed. Thousand Oaks, California: Sage Publications.

Cyganski, R., Fraedrich, E. and Lenz, B. 2015. *Travel-time valuation for automated driving: A use-case-driven study.*

Davis, F. 1989. *Perceived Usefulness, Perceived Ease of Use, and User Acceptance of Information Technology.*

DfT. 2018. *Transport Statistics - Great Britain 2018.*

Dichabeng, P., Merat, N. and Markkula, G. 2021. Factors that influence the acceptance of future shared automated vehicles – A focus group study with United Kingdom drivers. *Transportation Research Part F: Traffic Psychology and Behaviour.* **82**, pp.121-140.

Diels, C.e.a. 2017. Designing for Comfort in Shared and Automated Vehicles (SAV): a Conceptual Framework. In: *1st International Comfort Congress (ICC2017)*, *Salerno, Italy*. pp.June 7-8th.

Eden, G., Nanchen, B., Ramseyer, R. and Evéquoz, F. 2017. Expectation and Experience: Passenger Acceptance of Autonomous Public Transportation Vehicles. In: *Cham*. Springer International Publishing, pp.360-363.

Elbanhawi, M., Simic, M. and Jazar, R. 2015. In the Passenger Seat: Investigating Ride Comfort Measures in Autonomous Cars. *IEEE Intelligent Transportation Systems Magazine.* **7**, p4.

Emmerik, M., De Vries, S. and Bos, J. 2011. *Internal and external fields of view affect cybersickness.*

Erlingsson, C. and Brysiewicz, P. 2017. A hands-on guide to doing content analysis. *African Journal of Emergency Medicine.* **7**(3), pp.93-99.

Fagnant, D. and Kockelman, K. 2014. The travel and environmental implications of shared autonomous vehicles, using agent-based model scenarios. *Transportation Research Part C: Emerging Technologies.* **40**, pp.1-13.

Fagnant, D.J. and Kockelman, K. 2015. Preparing a nation for autonomous vehicles: Opportunities, barriers and policy recommendations. *Transportation Research Part A: Policy and Practice.* **77**, pp.167-181.

Farooq, B., Cherchi, E. and Sobhani, A. 2018. Virtual Immersive Reality for Stated Preference Travel Behaviour Experiments: A Case Study of Autonomous Vehicles on Urban Roads. *CoRR.* **abs/1802.06180**.

Finstad, K.A. 2010. Response interpolation and scale sensitivity: evidence against 5-point scales. *Journal of Usability Studies archive.* **5**, pp.104-110.

Fishman, E. and Schepers, P. 2016. Global bike share: What the data tells us about road safety. *Journal of Safety Research.* **56**, pp.41-45.

Fishman, E., Washington, S. and Haworth, N. 2013. Bike Share: A Synthesis of the Literature. *Transport Reviews.* **33**(2), pp.148-165.

Foroughi, B., Nhan, P.V., Iranmanesh, M., Ghobakhloo, M., Nilashi, M. and Yadegaridehkordi, E. 2023. Determinants of intention to use autonomous vehicles: Findings from PLS-SEM and ANFIS. *Journal of Retailing and Consumer Services.* **70**, p103158.

Geldmacher, W., Just, V., Kopia, J. and Kompalla, A. 2017. *Development of a modified technology acceptance model for an innovative car sharing concept with self-driving cars.*

Gibbs, G.R. 2007. Analyzing Qualitative Data. [Online]. London, England: SAGE Publications, Ltd. Available from: https://doi.org/https://doi.org/10.4135/9781849208574

Haboucha, C.J., Ishaq, R. and Shiftan, Y. 2017. User preferences regarding autonomous vehicles. *Transportation Research Part C: Emerging Technologies.* **78**, pp.37-49.

Hair, J.F., Ringle, C.M. and Sarstedt, M. 2011. PLS-SEM: Indeed a Silver Bullet. *Journal of Marketing Theory and Practice.* **19**(2), pp.139-152.

Hair, J.F., Sarstedt, M., Hopkins, L. and Kuppelwieser, V. 2014. Partial Least Squares Structural Equation Modeling (PLS-SEM): An Emerging Tool for Business Research. *European Business Review.* **26**, pp.106-121.

Henseler, J., Ringle, C.M. and Sarstedt, M. 2015. A new criterion for assessing discriminant validity in variance-based structural equation modeling. *Journal of the Academy of Marketing Science.* **43**(1), pp.115-135.

Hildebrandt, B., Hanelt, A., Piccinini, E., Kolbe, L. and Nierobisch, T. 2015. The Value of IS in Business Model Innovation for Sustainable Mobility Services - The Case of Carsharing. In: *Wirtschaftsinformatik*.

Ho, G.W. 2016. Examining Perceptions and Attitudes. *Western Journal of Nursing Research.* **39**(5), pp.674-689.

Hohenberger, C., Spörrle, M. and Welpe, I.M. 2016. How and why do men and women differ in their willingness to use automated cars? The influence of emotions across different age groups. *Transportation Research Part A: Policy and Practice.* **94**, pp.374-385.

Hollingsworth, J., Copeland, B. and Johnson, J. 2019. Are e-scooters polluters? the environmental impacts of shared dockless electric scooters. *Environmental Research Letters.* **14**(8).

Hopkins, D. and Schwanen, T. 2021. Talking about automated vehicles: What do levels of automation do? *Technology in Society.* **64**, p101488.

Howard, D. and Dai, D. 2014. Public perceptions of self-driving cars: The case of Berkeley, California. In: *93rd Annual Meeting TRB*, *Washington, DC.*

Hsieh, H.-F. and Shannon, S. 2005. *Three Approaches to Qualitative Content Analysis.*

Hu, L.-t. and Bentler, P.M. 1998. Fit indices in covariance structure modeling: Sensitivity to underparameterized model misspecification. *Psychological methods.* **3**(4), p424.

Hu, S., Chen, P. and Chen, X. 2021. Do personalized economic incentives work in promoting shared mobility? Examining customer churn using a time-varying Cox model. *Transportation Research Part C: Emerging Technologies.* **128**, p103224.

Jin, S.T., Kong, H., Wu, R. and Sui, D.Z. 2018. Ridesourcing, the sharing economy, and the future of cities. *Cities.* **76**, pp.96-104.

Jrew, B., Msallam, M. and Momani, M. 2019. Strategic Development of Transportation Demand Management in Jordan. *Civil Engineering Journal.* **5**, p48.

Jung, S. and Lindeman, R.W. 2021. Perspective: Does Realism Improve Presence in VR? Suggesting a Model and Metric for VR Experience Evaluation. *Frontiers in Virtual Reality.* **Volume 2 - 2021**.

Kamargianni, M. and Matyas, M. 2017. The business ecosystem of Mobility-as-a-Service. In: *Washington, DC*.

Kaur, K. and Rampersad, G. 2018. Trust in driverless cars: Investigating key factors influencing the adoption of driverless cars. *Journal of Engineering and Technology Management.* **48**, pp.87-96.

Khattak, Z.H. and Khattak, A.J. 2023. Using behavioral data to understand shared mobility choices of electric and hybrid vehicles. *International Journal of Sustainable Transportation.* **17**(2), pp.163-180.

Kim, S. and Ulfarsson, G.F. 2019. Traffic safety in an aging society: Analysis of older pedestrian crashes. *Journal of Transportation Safety & Security.* **11**(3), pp.323-332.

Kodransky, M. and Lewenstein, G. 2014. Connecting Low-Income People to Opportunity with Shared Mobility. In.

Körber, M., Baseler, E. and Bengler, K. 2018. Introduction matters: Manipulating trust in automation and reliance in automated driving. *Applied Ergonomics.* **66**, pp.18-31.

Krueger, R. 2002. *Designing and Conducting Focus Group Interviews.* [Online]. Available from: https://www.eiu.edu/ihec/Krueger-FocusGroupInterviews.pdf

Krueger, R., Rashidi, T.H. and Rose, J.M. 2016. Preferences for shared autonomous vehicles. *Transportation Research Part C: Emerging Technologies.* **69**, pp.343-355.

Kusmaryono, I. and Wijayanti, D. 2022. Number of Response Options, Reliability, Validity, and Potential Bias in the Use of the Likert Scale Education and Social Science Research: A Literature Review. *International Journal of Educational Methodology.*

Kyriakidis, M., Happee, R. and de Winter, J.C.F. 2015. Public opinion on automated driving: Results of an international questionnaire among 5000 respondents. *Transportation Research Part F: Traffic Psychology and Behaviour.* **32**, pp.127-140.

Lavieri, P.S. and Bhat, C.R. 2019. Investigating objective and subjective factors influencing the adoption, frequency, and characteristics of ride-hailing trips. *Transportation Research Part C: Emerging Technologies.* **105**, pp.148-172.

Lavieri, P.S., Garikapati, V.M., Bhat, C.R., Pendyala, R.M., Astroza, S. and Dias, F.F. 2017. Modeling Individual Preferences for Ownership and Sharing of Autonomous Vehicle Technologies. *Transportation Research Record: Journal of the Transportation Research Board.* **2665**, pp.1-10.

Litman, T. 2017. *Evaluating Transportation Equity: Guidance for Incorporating Distributional Impacts in Transportation Planning.* [Online]. [Accessed 14 March 2023]. Available from: http://www.vtpi.org/equity.pdf

Machado, C.A.S., De Salles Hue, N.P.M., Berssaneti, F.T. and Quintanilha, J.A. 2018. An Overview of Shared Mobility. **10**(12), p4342.

Madigan, R., Louw, T., Dziennus, M., Graindorge, T., Ortega, E., Graindorge, M. and Merat, N. 2016. Acceptance of Automated Road Transport Systems (ARTS): An Adaptation of the UTAUT Model. *Transportation Research Procedia.* **14**, pp.2217-2226.

Madigan, R., Louw, T., Wilbrink, M., Schieben, A. and Merat, N. 2017. What influences the decision to use automated public transport? Using UTAUT to understand public acceptance of automated road transport systems. *Transportation Research Part F: Traffic Psychology and Behaviour.* **50**, pp.55-64.

Maghraoui, O.A., Vosooghi, R., Mourad, A., Kamel, J., Puchinger, J., Vallet, F. and Yannou, B. 2020. Shared Autonomous Vehicle Services and User Taste Variations: Survey and Model Applications. *Transportation Research Procedia.* **47**, pp.3-10.

Makransky, G., Lilleholt, L. and Aaby, A. 2017. Development and validation of the Multimodal Presence Scale for virtual reality environments: A confirmatory factor analysis and item response theory approach. *Computers in Human Behavior.* **72**, pp.276-285.

Mars, L., Arroyo, R. and Ruiz, T. 2016. Qualitative Research in Travel Behavior Studies. *Transportation Research Procedia.* **18**, pp.434-445.

Mcgee, P. 2019. *Driverless efforts look past engineering to the difficult business of acceptance.* [Online]. [Accessed 14 July 2020]. Available from: www.latimes.com

Merat, N., Madigan, R. and Nordhoff, S. 2017. Human factors, user requirements, and user acceptance of ride-sharing in automated vehicles. *ITF Discussion Papers.* International Transport Forum.

Mesari, A. 2016. *What on earth are virtual focus groups?* [Online]. [Accessed 29 November 2018]. Available from: https://social-change.co.uk/news/post.php?s=2016-01-20-what-on-earth-are-virtual-focus-groups

Milakis, D., van Arem, B. and van Wee, B. 2017. Policy and society related implications of automated driving: A review of literature and directions for future research. *Journal of Intelligent Transportation Systems.* **21**(4), pp.324-348.

Murray, P.J. 1997. *Using Virtual Focus Groups in Qualitative Research.*

Nemoto, E.H., Issaoui, R., Korbee, D., Jaroudi, I. and Fournier, G. 2021. How to measure the impacts of shared automated electric vehicles on urban mobility. *Transportation Research Part D: Transport and Environment.* **93**, p102766.

Nhtsa. 2020. *Automated vehicles for safety.* [Online]. Available from: https://www.nhtsa.gov/technology-innovation/automated-vehicles-safety

Nordhoff, S., Arem, B.v., Merat, N., Madigan, R., Ruhrort, L., Knie, A. and Happee, R. 2017. User Acceptance of Driverless Shuttles Running in an Open and Mixed Traffic Environment. In: *12th ITS European Congress, 19-22 June 2017, Strasbourg, France*.

Nordhoff, S., de Winter, J., Madigan, R., Merat, N., van Arem, B. and Happee, R. 2018. User acceptance of automated shuttles in Berlin-Schöneberg: A questionnaire study. *Transportation Research Part F: Traffic Psychology and Behaviour.* **58**, pp.843-854.

Nordhoff, S., de Winter, J., Payre, W., van Arem, B. and Happee, R. 2019. What impressions do users have after a ride in an automated shuttle? An interview study. *Transportation Research Part F: Traffic Psychology and Behaviour.* **63**, pp.252-269.

Nordhoff, S., Louw, T., Innamaa, S., Lehtonen, E., Beuster, A., Torrao, G., Bjorvatn, A., Kessel, T., Malin, F., Happee, R. and Merat, N. 2020a. *Using the UTAUT2 model to explain public acceptance of conditionally automated (L3) cars: A questionnaire study among 9,118 car drivers from eight European countries.*

Nordhoff, S., Louw, T., Innamaa, S., Lehtonen, E., Beuster, A., Torrao, G., Bjorvatn, A., Kessel, T., Malin, F., Happee, R. and Merat, N. 2020b. Using the UTAUT2 model to explain public acceptance of conditionally automated (L3) cars: A questionnaire study among 9,118 car drivers from eight European countries. *Transportation Research Part F: Traffic Psychology and Behaviour.* **74**, pp.280-297.

Nordhoff, S., Madigan, R., Arem, B., Merat, N. and Happee, R. 2020c. Interrelationships among Predictors of Automated Vehicle Acceptance: A Structural Equation Modelling Approach. *Theoretical Issues in Ergonomics Science.*

NVivo. 2018. *Introducing NVivo.* [Online]. [Accessed 29 November 2018]. Available from: https://www.qsrinternational.com/nvivo/what-is-nvivo

Ong, A., Troncoso, J., Yeung, A., Kim, E. and Agogino, A.M. 2019. Towards Flexible Ridesharing Experiences: Human-Centered Design of Segmented Shared Spaces. In: *Cham*. Springer International Publishing, pp.373-380.

Osswald, S., Wurhofer, D., Tr, S., #246, sterer, Beck, E. and Tscheligi, M. 2012. Predicting information technology usage in the car: towards a car technology acceptance model. In: *Proceedings of the 4th International Conference on Automotive User Interfaces and Interactive Vehicular Applications*, *Portsmouth, New Hampshire*. 2390264: ACM, pp.51-58.

Overtoom, I., Correia, G., Huang, Y. and Verbraeck, A. 2020. Assessing the impacts of shared autonomous vehicles on congestion and curb use: A traffic simulation study in The Hague, Netherlands. *International Journal of Transportation Science and Technology.* **9**(3), pp.195-206.

Paes, D., Arantes, E. and Irizarry, J. 2017. Immersive environment for improving the understanding of architectural 3D models: Comparing user spatial perception between immersive and traditional virtual reality systems. *Automation in Construction.* **84**, pp.292-303.

Perc, M., Ozer, M. and Hojnik, J. 2019. Social and juristic challenges of artificial intelligence. *Palgrave Communications.* **2019**.

Piao, J., McDonald, M., Hounsell, N., Graindorge, M., Graindorge, T. and Malhene, N. 2016. Public Views towards Implementation of Automated Vehicles in Urban Areas. *Transportation Research Procedia.* **14**, pp.2168-2177.

Prettenthaler, F.E. and Steininger, K.W. 1999. From ownership to service use lifestyle: the potential of car sharing. *Ecological Economics.* **28**(3), pp.443-453.

Ragan, E.D., Sowndararajan, A., Kopper, R. and Bowman, D.A. 2010. The effects of higher levels of immersion on procedure memorization performance and implications for educational virtual environments. *Presence: Teleoperators & Virtual Environments.* **19**(6), pp.527-543.

Rahman, M.M., Lesch, M.F., Horrey, W.J. and Strawderman, L. 2017. Assessing the utility of TAM, TPB, and UTAUT for advanced driver assistance systems. *Accident Analysis & Prevention.* **108**, pp.361-373.

Rayle, L., Dai, D., Chan, N., Cervero, R. and Shaheen, S. 2016. Just a better taxi? A survey-based comparison of taxis, transit, and ridesourcing services in San Francisco. *Transport Policy.* **45**, pp.168-178.

Redman, L., Friman, M., Gärling, T. and Hartig, T. 2013. Quality attributes of public transport that attract car users: A research review. *Transport Policy.* **25**, pp.119-127.

Ricci, M. 2015. Bike sharing: A review of evidence on impacts and processes of implementation and operation. *Research in Transportation Business & Management.* **15**, pp.28-38.

Rizzo, A.A., Difede, J., Rothbaum, B.O., Reger, G., Spitalnick, J., Cukor, J. and McLay, R. 2011. Development and early evaluation of the Virtual Iraq/Afghanistan exposure therapy

system for combat-related PTSD. *Annals of the New York Academy of Sciences.* **1208**(1), pp.114-125.

Rondan-Cataluña, F., Arenas-Gaitán, J. and Ramírez-Correa, P. 2015. A comparison of the different versions of popular technology acceptance models: A non-linear perspective. *Kybernetes.* **44**.

SAE. 2021a. *Definitions for Terms Related to Driving Automation Systems for On-Road Motor Vehicles.*

SAE. 2021b. *Taxonomy and Definitions for Terms Related to Shared Mobility and Enabling Technologies.* Society of Automotive Engineers.

Saeed, T.U., Burris, M.W., Labi, S. and Sinha, K.C. 2020. An empirical discourse on forecasting the use of autonomous vehicles using consumers' preferences. *Technological Forecasting and Social Change.* **158**, p120130.

Salonen, A.O. 2018. Passenger's subjective traffic safety, in-vehicle security and emergency management in the driverless shuttle bus in Finland. *Transport Policy.* **61**, pp.106-110.

Sarstedt, M., Hair, J.F., Cheah, J.-H., Becker, J.-M. and Ringle, C.M. 2019. How to specify, estimate, and validate higher-order constructs in PLS-SEM. *Australasian Marketing Journal (AMJ).* **27**(3), pp.197-211.

Sarstedt, M., Ringle, C.M. and Hair, J.F. 2021. Partial least squares structural equation modeling. *Handbook of market research.* Springer, pp.587-632.

Schaller, B. 2018. *The New Automobility: Lyft, Uber and the Future of American Cities.* Schaller Consulting.

Schoettle, B. and Sivak, M. 2014. *A survey of public opinion about autonomous and self-driving vehicles in the U.S., the U.K., and Australia.* The University of Michigan, Transportation Research Institute.

Schubert, T., Friedmann, F. and Regenbrecht, H. 2001. The Experience of Presence: Factor Analytic Insights. *Presence: Teleoperators and Virtual Environments.* **10**(3), pp.266-281.

Shaheen, S., Bell, C., Cohen, A. and Yelchuru, B. 2017. *Travel Behavior: Shared Mobility and Transportation Equity.* Washington, DC, USA: Federal Highway Administration.

Shaheen, S. and Cohen, A. 2019. Shared ride services in North America: definitions, impacts, and the future of pooling. *Transport Reviews.* **39**(4), pp.427-442.

Shaheen, S. and Cohen, A. 2020. *Innovative Mobility: Carsharing Outlook; Carsharing Market Overview, Analysis, and Trends.* [Online]. [Accessed 14 March 2023]. Available from: https://escholarship.org/uc/item/61q03282

Shaheen, S., Cohen, A. and Zohdy, I. 2016. *Shared Mobility: Current Practices and Guiding Principles.* Washington, DC, USA: Federal Highway Administration.

Shaheen, S.A., Chan, N.D. and Gaynor, T. 2016. Casual carpooling in the San Francisco Bay Area: Understanding user characteristics, behaviors, and motivations. *Transport Policy.* **51**, pp.165-173.

Shaheen, S.A. and Cohen, A.P. 2013. Carsharing and Personal Vehicle Services: Worldwide Market Developments and Emerging Trends. *International Journal of Sustainable Transportation.* **7**(1), pp.5-34.

Shen, Y., Zhang, H. and Zhao, J. 2018. Integrating shared autonomous vehicle in public transportation system: A supply-side simulation of the first-mile service in Singapore. *Transportation Research Part A: Policy and Practice.* **113**, pp.125-136.

Silva, T.B.d., Baptista, P., Santos Silva, C.A. and Santos, L. 2022. Assessment of decarbonization alternatives for passenger transportation in Rio de Janeiro, Brazil. *Transportation Research Part D: Transport and Environment.* **103**, p103161.

Singleton, P.A. 2018. Discussing the "positive utilities" of autonomous vehicles: will travellers really use their time productively? *Transport Reviews.* **39**(1), pp.50-65.

Skalski, P. and Whitbred, R. 2010. Image versus Sound: A Comparison of Formal Feature Effects on Presence and Video Game Enjoyment. *PsychNology Journal.* **8**, pp.67-84.

Slater, M., Lotto, B., Arnold, M.M. and Sanchez-Vives, M.V. 2009. How we experience immersive virtual environments : the concept of presence and its measurement *. In.

Slater, M., Lotto, B., Arnold, M.M. and Sanchez-Vives, M.V. 2009. How we experience immersive virtual environments: the concept of presence and its measurement. *Anuario de Psicología.* **40**(2), pp.193-210.

Sperling, D. and Shaheen, S. 2018. *Three Revolutions: Steering Automated, Shared, and Electric Vehicles to a Better Future.* Island Press.

Subhiksa, S.K. and Purba, D.E. 2021. Emotional Labor as the Underlying Mechanism in the Relationship Between Emotional Stability and Affective Commitment: A Study in the Hospitality Industry. *Jurnal Manajemen Dan Pemasaran Jasa.* **14**(1), pp.1-18.

Sweet, C. 2001. Designing and conducting virtual focus groups. *Qualitative Market Research: An International Journal.* **4**(3), pp.130-135.

Tamilmani, K., Rana, N. and Dwivedi, Y. 2017. *A Systematic Review of Citations of UTAUT2 Article and Its Usage Trends.*

Then, K.L., Rankin, J.A. and Ali, E. 2014. Focus group research: what is it and how can it be used? *Canadian journal of cardiovascular nursing = Journal canadien en soins infirmiers cardio-vasculaires.* **24 1**, pp.16-22.

Trypuz, R., Kulicki, P. and Sopek, M. 2024. Ontology of autonomous driving based on the SAE J3016 standard. *Semantic Web – Interoperability, Usability, Applicability.*

Uber. 2018. *Is Uber safe?* [Online]. [Accessed 14 September 2018]. Available from: https://help.uber.com/partners/article/is-uber-safe?nodeId=b30b3f2c-126b-433c-9e3f-9277474c5c41

Uber. 2022. *Assisting older, less mobile or disabled individuals.* [Online]. [Accessed 11 March 2023]. Available from: https://www.uber.com/en-GB/blog/uber-access-and-assist/

Vecchio, G. 2018. Producing Opportunities Together: Sharing-Based Policy Approaches for Marginal Mobilities in Bogotá. *Urban Science.* [Online]. **2**(3). Available from: https://doi.org/10.3390/urbansci2030054

Venkatesh, V., Morris, M.G., Davis, G.B. and Davis, F.D. 2003. User Acceptance of Information Technology: Toward a Unified View. *MIS Quarterly.* **27**(3).

Venkatesh, V., Thong, J.Y.L. and Xu, X. 2012. Consumer Acceptance and Use of Information Technology: Extending the Unified Theory of Acceptance and Use of Technology. *MIS Quarterly.* **36**(1), pp.157-178.

Vu, K.D.T. and Nguyen, B.N. 2021. Sustainable Material Awareness, Belief and Readiness in Housing Development. *Built Environment Journal.* **18**(2), p88.

Wadud, Z., MacKenzie, D. and Leiby, P. 2016. Help or hindrance? The travel, energy and carbon impacts of highly automated vehicles. *Transportation Research Part A: Policy and Practice.* **86**, pp.1-18.

Williams, S. 2009. *Understanding Anorexia Nervosa: an online phenomenological approach*. thesis, Queen Margaret University.

Williams, S., Clausen, M.G., Robertson, A., Peacock, S. and McPherson, K. 2012. Methodological Reflections on the Use of Asynchronous Online Focus Groups in Health Research. *International Journal of Qualitative Methods.* **11**(4), pp.368-383.

Winter, K., Cats, O., Martens, K. and Arem, B.v. 2020. Identifying user classes for shared and automated mobility services. *European Transport Research Review.* **12**, pp.1-11.

Witmer, B.G. and Singer, M.J. 1998. Measuring Presence in Virtual Environments: A Presence Questionnaire. *Presence: Teleoperators and Virtual Environments.* **7**(3), pp.225-240.

Yakovlev, A. and Otto, P. 2018. *The Future of Mobility - Shared Mobility.* IPSOS Knowledge Centre.

Yin, J.-h. and Hai-ying, S. 2023. Does the Perception of Smart Governance Enhance Commercial Investments? Evidence From Beijing, Shanghai, Guangzhou, and Hangzhou. *Heliyon.* **9**(8), pe19024.

Zervas, G., Proserpio, D. and Byers, J.W. 2017. The Rise of the Sharing Economy: Estimating the Impact of Airbnb on the Hotel Industry. *Journal of Marketing Research.* **54**(5), pp.687-705.

Zhang, W. and Wang, K. 2020. Parking futures: Shared automated vehicles and parking demand reduction trajectories in Atlanta. *Land Use Policy.* **91**, p103963.

Zhou, F., Zheng, Z., Whitehead, J., Washington, S., Perrons, R.K. and Page, L. 2020. Preference heterogeneity in mode choice for car-sharing and shared automated vehicles. *Transportation Research Part A-policy and Practice.* **132**, pp.633-650.

Zmud, J.P. and Sener, I.N. 2017. Towards an Understanding of the Travel Behavior Impact of Autonomous Vehicles. *Transportation Research Procedia.* **25**, pp.2500-2519.

Appendices

UNIVERSITY OF LEEDS

Appendix A – Study 1 Daily Activity Guide

UK Drivers Online Focus Group

DAILY GUIDE

Thank you for volunteering and for completing your registration. This is a daily activity guide on how to participate in the on focus group.

DAY 1 – May 23, 2019

- You will be presented with 18 questions. Answer as many of the questions as you can in this first day.
- All questions are unbiased. Responses from other participants will not be visible to you, until you have answered the same question.
- When answering a question, be descriptive. Do not just state your answer.

DAY 2 – May 24, 2019

- If there are any questions that you have not answered, then try to answer all the remaining questions.
- This is a good time to read the responses from other participants. This part can feel a bit overwhelming, but try to approach this in steps; question by question.
- When reading other participants' responses, think back to both the question and your own answer.
- This is also a good time to start adding comments/replies to other participants' responses.

DAY 3 – May 28, 2019

- If you have not already done so, start adding comments/replies to other participants' responses. Challenge their position if you disagree with them.
- You can agree, disagree, or even ask a question. Feel free.
- When you reply to a participant, they will receive an email notifying that someone has replied to their comment. Keep an eye on your own inbox for these.
- Also keep and eye out for questions/replies from the moderator.

DAY 4 – May 29, 2019

- Revisit your own answers. You cannot edit an answer you have given before, but you can reply to your own comment if you want to make something clearer.
- Make sure you have responded to all replies directed at you, if necessary, especially questions from the moderator.

DAY 5 – May 30, 2019

- Check what other participants have been up to. Read their new replies.
- There is an agree button. Click this to quickly agree with a point being made.
- Avoid asking questions on this day. Simply reply by giving a comment if you have something to share.

Remember, you can login at any time you are free, as many times as you want.

Appendix B – Study 1 Sample Questions

Table 33: Study 1 Sample questions

Engagement questions	**Preferred Mode of Transport**
	• What is your preferred mode of transport when going to work?
	  ○ Private Car
	  ○ Cab/Ride Sourcing
	  ○ Motorcycle
	  ○ Bicycle
	  ○ Bus/Coach
	  ○ National rail/Other Rail
	  ○ Walk
	  ○ Other Modes____ Please specify.
	• What is it about this mode of transport that makes you like it?

Exploration questions	**Experience with Shared Modes of Transport** • What was your experience like when using a shared vehicle like Uber? 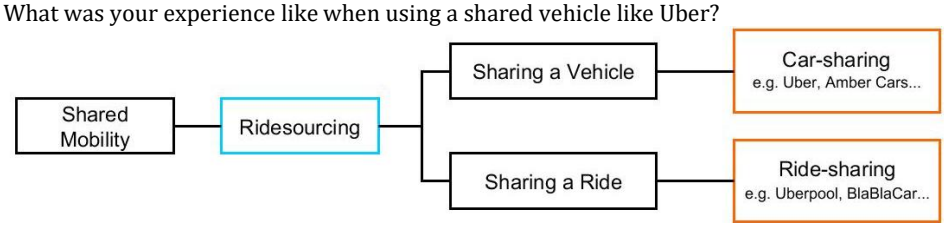 • What did you like about using a shared vehicle? • What did you <u>not</u> like about using a shared vehicle? **Perceptions of Shared Driverless Modes of Transport** • In what ways do you think your experience would change when using a car sharing service like an Uber, if the car is self-driving (without a human driver, without a steering wheel)? Watch this short example video: https://www.youtube.com/embed/Ys-W51tNweQ (a 45 second USA Today news clip showing a General Motors prototype for Cruise, which is designed to operate with no driver, steering wheel, pedals or other manual controls.) 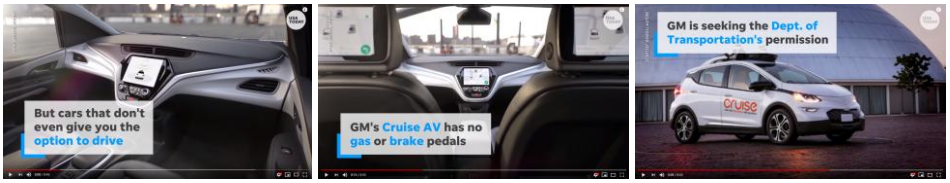 • Which of these changes would you perceive as positive, and which would be negative? • Would your experience with the self-driving shared car change depending on the time (night vs day)? If yes, explain. • In what ways do you think your experience would change when using a ride sharing service like an Uberpool/BlablaCar, if the car is self-driving (without a human driver)? (With figure showing ride-sharing)

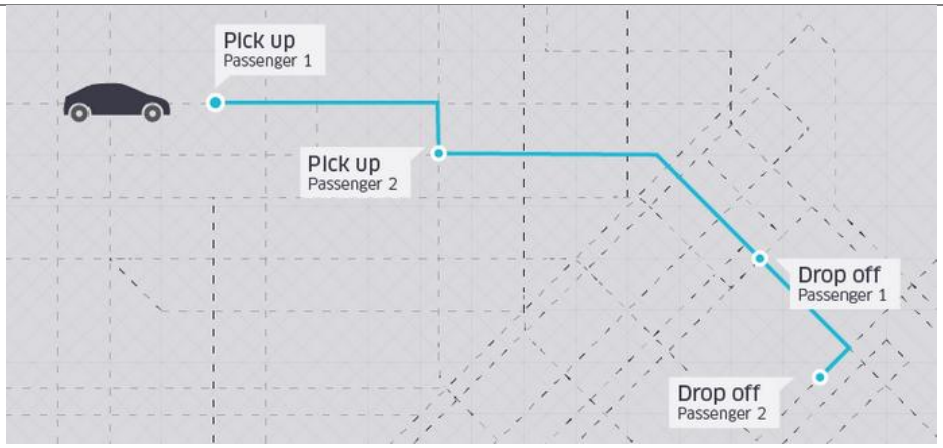

- Which of these changes would you perceive as positive, and which would be negative?
- Does your experience with the self-driving shared ride change depending on the time (night vs day)? If yes, explain.

Perceptions of Shared Space In Driverless Modes of Transport

- How do you feel about sharing the space inside a driverless vehicle with people you do not know?
- How does this change depending on the time of day? i.e., Night vs Day.

Features of Driverless Shared Vehicles

- If you were to design your own shared automated vehicle (driverless shared vehicle), what features/aspects/functionality would you consider to be important? List as many as you can think of.
- Choose the two (2) most important features from your list. Explain why they are important for your self-driving shared vehicle.
- Do you feel with these changes you would personally use a driverless shared vehicle? Explain why or why not.

Exit questions

Anything Else…

- Is there anything else you would like to say about making the experience of sharing a driverless vehicle attractive for yourself?
- Which of the following would you personally consider to be important for your self-driving ride-share experience (sharing with other passengers)? Select all that apply. (Presented on day 5, as a private question)

☐ Personal security	☐ Vehicle being electric
☐ Cost per trip	☐ Abuse/Misuse of car
☐ Space between passengers	☐ Upkeep
☐ Travel time	☐ Reduced vehicle miles travelled
☐ Waiting time for vehicle	☐ Configurable seating
☐ Co-passenger punctuality	☐ Vehicle options
☐ Traffic congestion	☐ Vehicle fleet (number in operation)
☐ Cyber security	☐ Secure storage
☐ Splitting trip cost	☐ Configurable lighting
☐ Number of stops per trip	☐ Entertainment
☐ Liability	☐ Refreshments
☐ Connective ports	☐ Vehicle range
☐ Wifi	