PRODUCED BY AN AUTODESK EDUCATIONAL PRODUCT

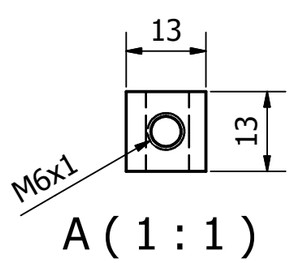

A (1 : 1)

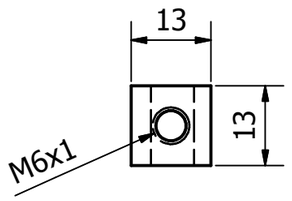

B (1 : 1)

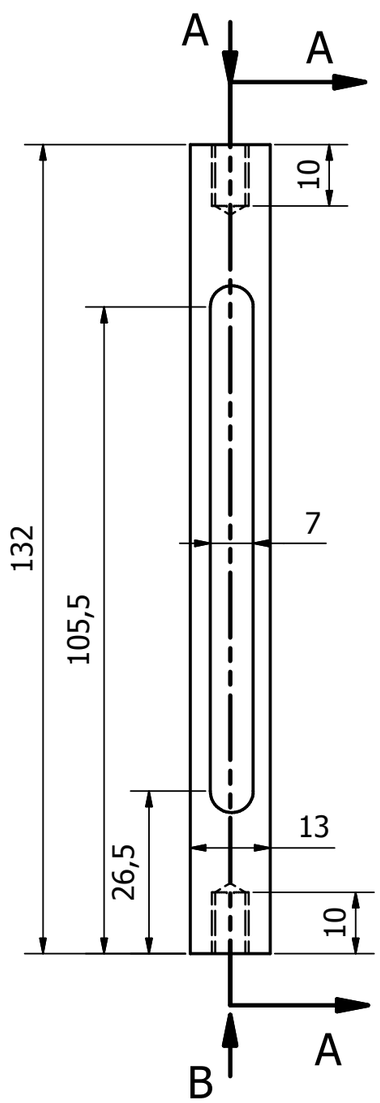

FRONT VIEW
(1 : 1)

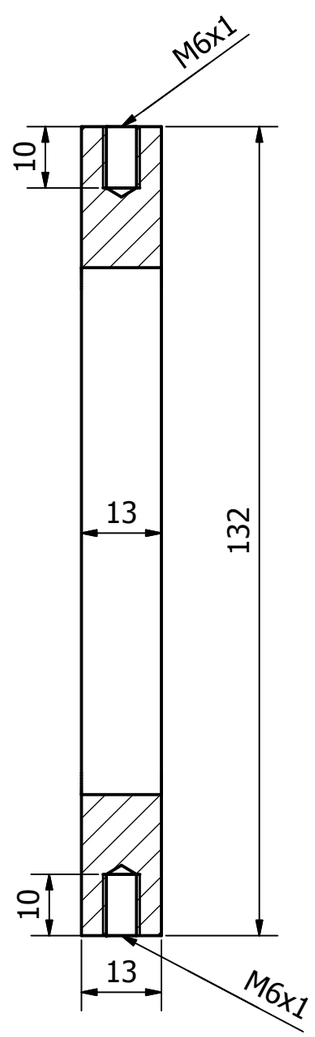

SECTION A-A
(1 : 1)

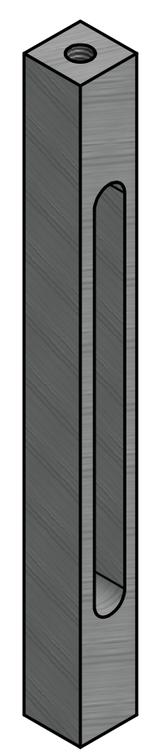

DESIGNED BY	CHECKED BY	APPROVED BY	DATE		DATE	
PEDROM TAYEFI	PT	PT	14/10/2014		03/07/2013	

UNI OF SHEFFIELD	US PROBE HOLDER		
	US PROBE HOLDER	ISSUE	SHEET 1 / 1

PRODUCED BY AN AUTODESK EDUCATIONAL PRODUCT