PRODUCED BY AN AUTODESK EDUCATIONAL PRODUCT

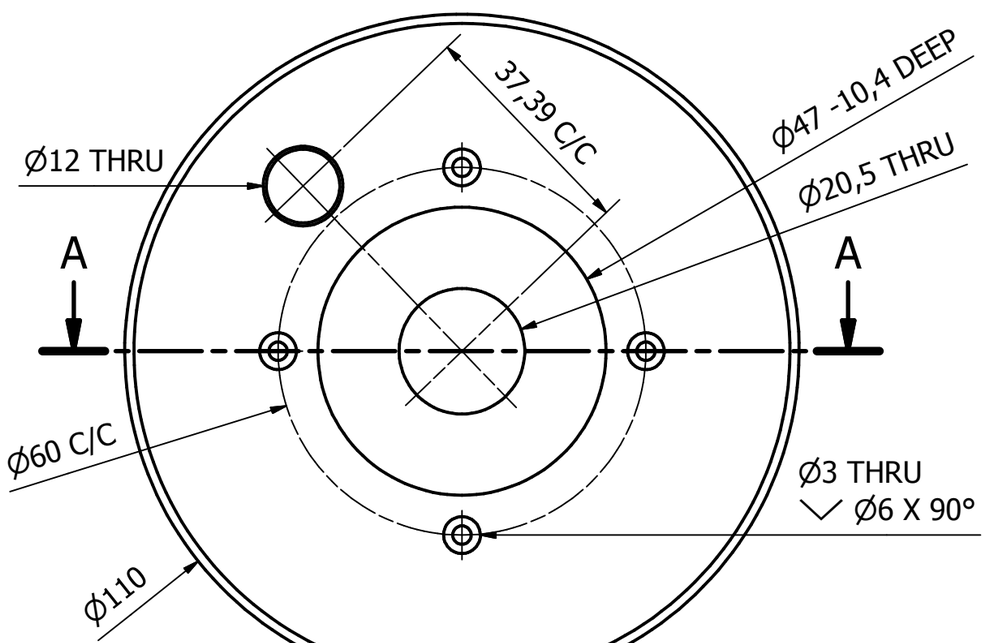

BOTTOM VIEW
(1 : 1)

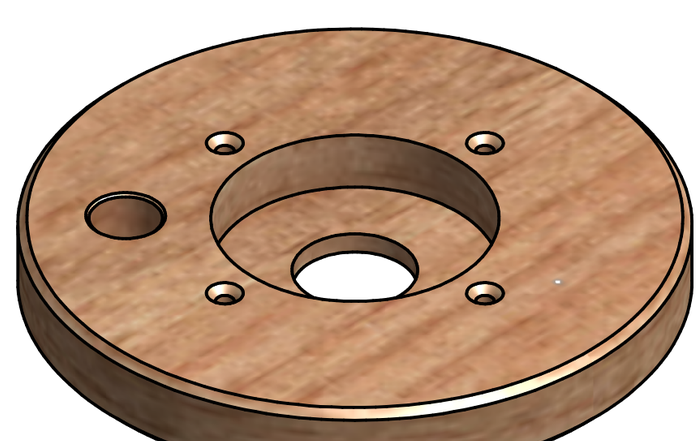

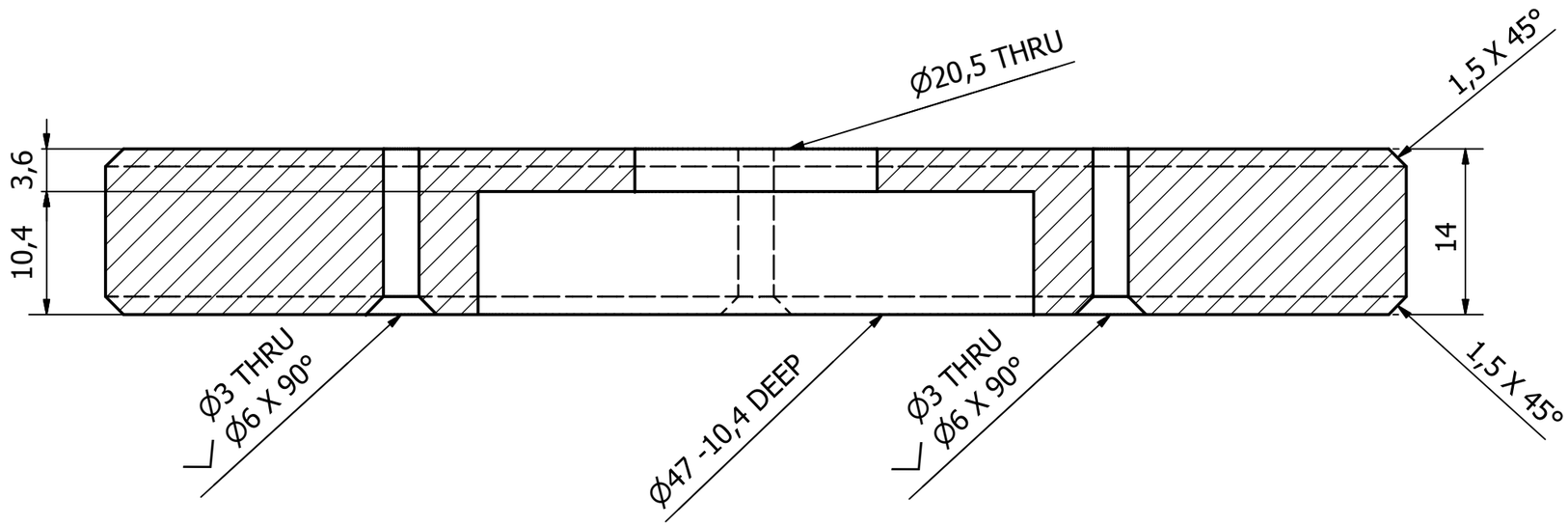

SECTION A-A
(2 : 1)

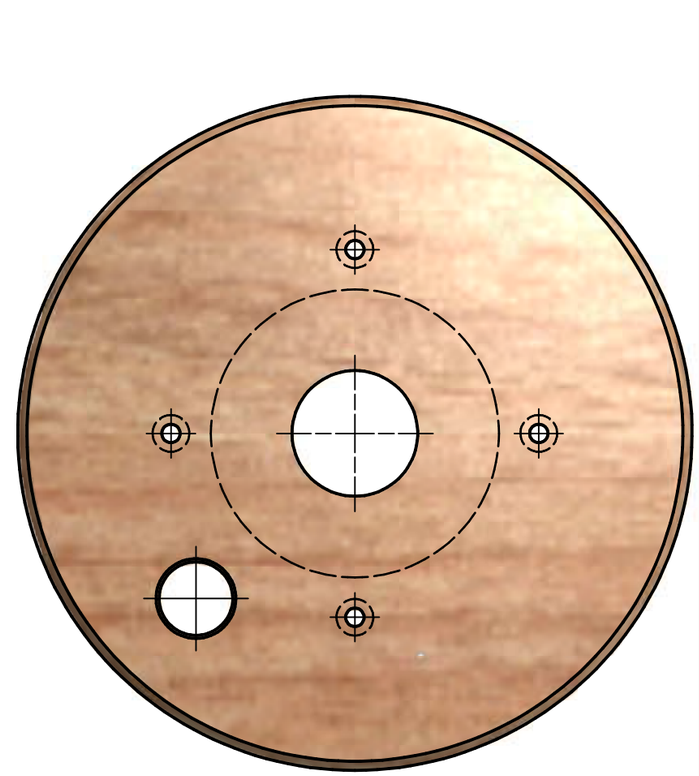

DESIGNED BY	CHECKED BY	APPROVED BY	DATE		DATE	
PEDROM TAYEFI	PT	PT	14/10/2014		03/07/2013	

UNI OF SHEFFIELD	COLUMN PLATFORM		
	COLUMN PLATFORM	ISSUE	SHEET 1 / 1

PRODUCED BY AN AUTODESK EDUCATIONAL PRODUCT