PRODUCED BY AN AUTODESK EDUCATIONAL PRODUCT

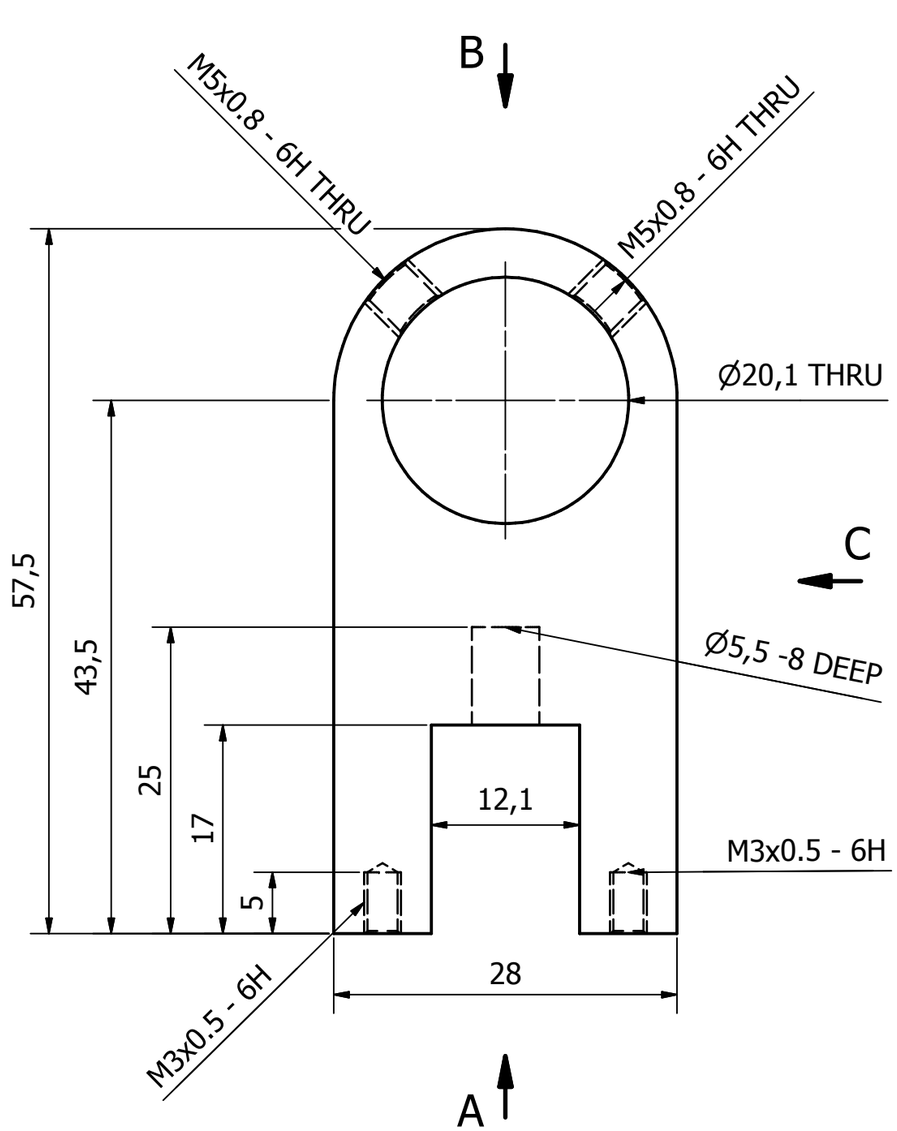

TOP VIEW
(2 : 1)

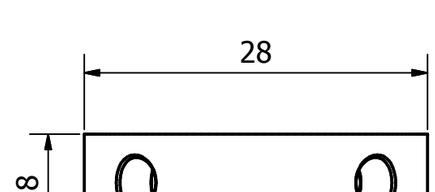

B (2 : 1)

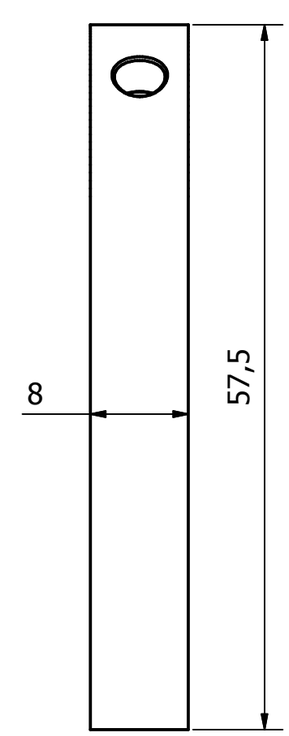

C (2 : 1)

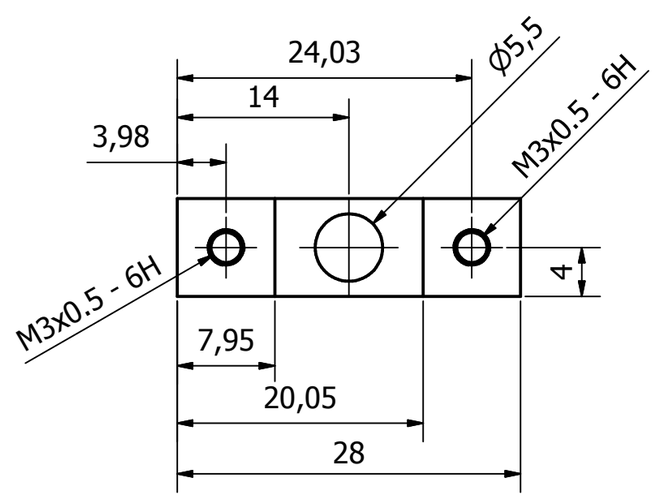

A (2 : 1)

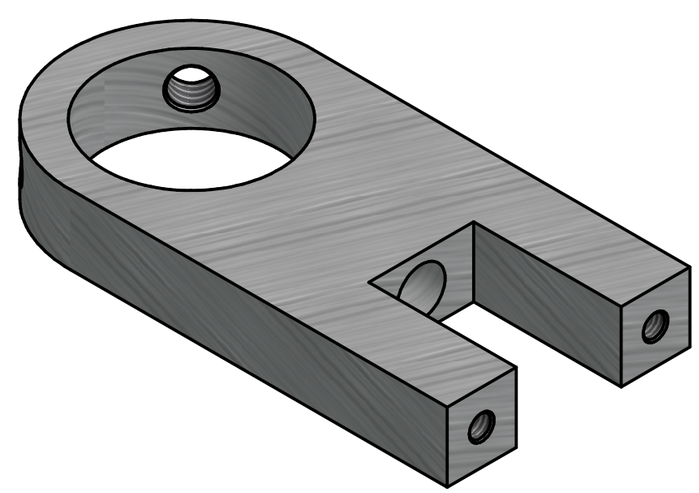

DESIGNED BY	CHECKED BY	APPROVED BY	DATE		DATE	
PEDROM TAYEFI	PT	PT	14/10/2014		03/07/2013	

UNI OF SHEFFIELD

FORK

FORK	ISSUE	SHEET
		1 / 1

PRODUCED BY AN AUTODESK EDUCATIONAL PRODUCT